Appendix **G Preliminary Water Quality Management Plan**

This Page Intentionally Left Blank

MADERA AT CITRUS TRAIL RESIDENTIAL PROJECT

NW Corner of E. Colton & Wabash
Redlands, California 92374

Preliminary Water Quality Management Plan

Prepared By:

Fred Cornwell, P.E.
CA Engineering, Inc.
13821 Newport Avenue, Suite 110
Tustin, CA 92780
949.724.9480 / fcornwell@ca-eng.net

Prepared For:

Soni 2012 Irrevocable Trusts
1423 Georgina Avenue
Santa Monica, CA 90402
949.922.7075

Date Prepared: July 18, 2022
Date Revised: October 4, 2022

Preliminary Water Quality Management Plan

For:

Madera at Citrus Trail Residential Project

NW Corner of E. Colton Avenue and Wabash Avenue
Redlands, California 92374

APN: 0168-291-02-0-000

Prepared for:

Soni 2012 Irrevocable Trusts
Vanita Soni Puri, Authorized Signatory
1423 Georgina Avenue
Santa Monica, CA 90402
(949) 922-7075 / vanitapuri@gmail.com

Prepared by:

CA Engineering, Inc.
Fred Cornwell, P.E., RCE #45591
13821 Newport Avenue, Suite 110
Tustin, CA 92780
(949) 724-9480 (x2012) / fcornwell@ca-eng.net

Submittal Date: July 18, 2022
Revision Date: October 4, 2022
Approval Date: ____________________

REGISTERED PROFESSIONAL ENGINEER
FRED CORNWELL
NO 45591
CIVIL
STATE OF CALIFORNIA

Project Owner's Certification

This Water Quality Management Plan (WQMP) has been prepared for the Soni 2012 Irrevocable Trusts by CA Engineering, Inc. The WQMP is intended to comply with the requirements of the City of Redlands and the NPDES Areawide Stormwater Program requiring the preparation of a WQMP. The undersigned, while it owns the subject property, is responsible for the implementation of the provisions of this plan and will ensure that this plan is amended as appropriate to reflect up-to-date conditions on the site consistent with San Bernardino County's Municipal Storm Water Management Program and the intent of the NPDES Permit for San Bernardino County and the incorporated cities of San Bernardino County within the Santa Ana Region. Once the undersigned transfers its interest in the property, its successors in interest and the city/county shall be notified of the transfer. The new owner will be informed of its responsibility under this WQMP. A copy of the approved WQMP shall be available on the subject site in perpetuity.

"I certify under a penalty of law that the provisions (implementation, operation, maintenance, and funding) of the WQMP have been accepted and that the plan will be transferred to future successors."

Project Data

Permit/Application Number(s):		Grading Permit Number(s):	Pending
Tract/Parcel Map Number(s):		Building Permit Number(s):	Pending
CUP, SUP, and/or APN (Specify Lot Numbers if Portions of Tract):			APN: 0168-291-02-0-000

Owner's Signature

Owner Name: Soni 2012 Irrevocable Trusts

Title	Vanita Soni Puri, Authorized Signatory		
Company	Soni 2012 Irrevocable Trusts		
Address	1423 Georgina Avenue, Santa Monica, CA 90402		
Email	vanitapuri@gmail.com		
Telephone #	(949) 922-7075		
Signature		Date	

Preparer's Certification

Project Data			
Permit/Application Number(s):		Grading Permit Number(s):	Pending
Tract/Parcel Map Number(s):		Building Permit Number(s):	Pending
CUP, SUP, and/or APN (Specify Lot Numbers if Portions of Tract):			APN: 0168-291-02-0-000

"The selection, sizing and design of stormwater treatment and other stormwater quality and quantity control measures in this plan were prepared under my oversight and meet the requirements of Regional Water Quality Control Board Order No. R8-2010-0036."

Engineer: Fred Cornwell, P.E.		PE Stamp Below REGISTERED PROFESSIONAL ENGINEER FRED CORNWELL NO. 45591 CIVIL STATE OF CALIFORNIA
Title	Principal	
Company	CA Engineering, Inc.	
Address	13821 Newport Avenue, Suite 110, Tustin, CA 92780	
Email	fcornwell@ca-eng.net	
Telephone #	(949) 724-9480 (x2012)	
Signature		
Date	10-4-2022	

Table of Contents

Forms

APPENDICES INCLUDED IN SECTION 6.1 (Site Plan and Drainage Plan):

APPENDICES INCLUDED IN SECTION 6.2 (Electronic Data Submittal):

APPENDICES INCLUDED IN SECTION 6.3 (Post Construction):

APPENDICES INCLUDED IN SECTION 6.4 (Other Supporting Documentation):

Section 1 Discretionary Permit(s)

Form 1-1 Project Information

Project Name	Madera at Citrus Trail Residential Project				
Project Owner Contact Name:	Vanita Soni Puri				
Mailing Address:	1423 Georgina Avenue Santa Monica, CA 90402	E-mail Address:	vanitapuri@gmail.com	Telephone:	(949) 922-7075
Permit/Application Number(s):		Tract/Parcel Map Number(s):			
Additional Information/ Comments:	N/A				
Description of Project:	The proposed project site is an approximately 9.01 acre parcel of land located northwest of the intersection of E. Colton Avenue and Wabash Avenue in the city of Redlands, California. The property is bordered by single-family residences to the north, Wabash Avenue to the east (beyond which is an industrial development), E. Colton Avenue to the south (beyond which is a mobile home park), and a mobile home park to the west. The site measures 392,503 square feet and is currently undeveloped land covered in grass and vegetation. The proposed development will involve the construction of 103 single-family homes, as well as associated drive aisles, parking areas, sidewalks, common open space areas, landscaping, and utility improvements. The proposed single-family homes will be two-story structures with two garage spaces per home, and will have a total footprint area of 122,630 square feet. In addition, the proposed development will contain 95,476 square feet of concrete walkways and hardscape, and 95,896 square feet of asphalt drive aisles and parking spaces, for a total impervious area of 314,002 square feet, or 80% of the project area. The balance of the project site will contain 78,501 square feet of landscaping, or 20% of the project area, for a total project site of 392,503 square feet. The private asphalt streets (drive aisles) contained within the proposed development are the only streets, roads, or highway projects planned to be constructed as part of this WQMP. There are no known materials or wastes that are anticipated to be used or produced at the proposed residential development that would be classified as “hazardous.” Further, none of the materials to be used at the proposed residential development will be stored outside. The project will not violate any water quality standards because the project will be required to meet the City’s NPDES permit discharge requirements. The proposed project will have two drainage areas, DA 1 and DA 2, which are depicted on the WQMP Site Plan attached hereto as Appendix D in Section 6.1. DA 1 measures 380,199 square feet and comprises the majority of the site. DA 2 measures 12,304 square feet and is comprised of a small area at the southwest corner of the site. Due to grade breaks at each of the driveway entrances, storm water falling on a total of 2,636 square feet of the driveways will flow offsite without being treated (since it is not possible to capture these flows without allowing offsite flows to enter the onsite storm water treatment system). However, the DCV for the entire site area—392,503 square feet—will be captured and infiltrated.				

	In DA 1, a subsurface infiltration facility will be constructed to retain and infiltrate on site storm water flows, and it will be located immediately to the west of the common open space area near the center of the site. The flows will be collected by catch basins and conveyed, via the on-site storm drain, to the underground infiltration facility. The catch basins will have filter inserts installed to remove sediment, debris, and other pollutants of concern from the storm flows prior to the flows being infiltrated. The infiltration facility will be sized to retain the Design Capture Volume (“DCV”), and will consist of 183 lineal feet of dual 96”perforated CMP pipes placed on a 20’ wide gravel bed. (In DA 1, the DCV exceeds the volume reduction needed to meet the HCOC requirement (V_{HCOC}) per San Bernardino County WQMP requirements.) Storm flows that exceed the capacity of this infiltration facility will be directed to a storm drain system that runs southerly to E. Colton Avenue and then westerly in E. Colton Avenue to a proposed catch basin located to the west of the development. The excess storm flows will bubble out of this catch basin into E. Colton Avenue once the hydraulic grade line rises above the street elevation. In DA 2, a subsurface infiltration facility will be constructed under the landscaped area at the southwest corner of the site. The storm water in this area will surface flow to an existing concrete drainage channel that currently outlets to E. Colton Avenue via a parkway culvert. A grated inlet with an insert filter will be installed in the existing drainage channel to collect and pretreat the design storm flows prior to conveying them to the infiltration facility. The infiltration facility will be sized to retain the V_{HCOC}, which exceeds the DCV in DA 2, and will consist of 20 lineal feet of 96” perforated CMP pipe placed on a 10’ wide gravel bed. Storm flows that exceed the capacity of this infiltration facility will bypass the inlet and be released to E. Colton Avenue via the existing drainage channel and parkway culvert. The infiltration facilities in DA 1 and DA 2 will satisfy the Hydrologic Condition of Concern (HCOC) requirements which state that the proposed 2-year, 24-hour storm hydrograph volume, time of concentration, and peak runoff must be within 105% of the existing 2-year storm parameters.
Provide summary of Conceptual WQMP conditions (if previously submitted and approved). Attach complete copy.	N/A

Section 2 Project Description

2.1 Project Information

This section of the WQMP should provide the information listed below. The information provided for Conceptual/ Preliminary WQMP should give sufficient detail to identify the major proposed site design and LID BMPs and other anticipated water quality features that impact site planning. Final Project WQMP must specifically identify all BMP incorporated into the final site design and provide other detailed information as described herein.

The purpose of this information is to help determine the applicable development category, pollutants of concern, watershed description, and long term maintenance responsibilities for the project, and any applicable water quality credits. This information will be used in conjunction with the information in Section 3, Site Description, to establish the performance criteria and to select the LID BMP or other BMP for the project or other alternative programs that the project will participate in, which are described in Section 4.

Form 2.1-1 Description of Proposed Project

1 Development Category (Select all that apply):

☐ Significant re-development involving the addition or replacement of 5,000 ft^2 or more of impervious surface on an already developed site	☒ New development involving the creation of 10,000 ft^2 or more of impervious surface collectively over entire site	☐ Automotive repair shops with standard industrial classification (SIC) codes 5013, 5014, 5541, 7532- 7534, 7536-7539	☐ Restaurants (with SIC code 5812) where the land area of development is 5,000 ft^2 or more
☐ Hillside developments of 5,000 ft^2 or more which are located on areas with known erosive soil conditions or where the natural slope is 25 percent or more	☐ Developments of 2,500 ft^2 of impervious surface or more adjacent to (within 200 ft) or discharging directly into environmentally sensitive areas or waterbodies listed on the CWA Section 303(d) list of impaired waters.	☐ Parking lots of 5,000 ft^2 or more exposed to storm water	☐ Retail gasoline outlets that are either 5,000 ft^2 or more, or have a projected average daily traffic of 100 or more vehicles per day

☐ Non-Priority / Non-Category Project *May require source control LID BMPs and other LIP requirements. Please consult with local jurisdiction on specific requirements*.

2 Project Area (ft2):	392,503	3 Number of Dwelling Units:	103	4 SIC Code:	1521

5 Is Project going to be phased? Yes ☐ No ☒ *If yes, ensure that the WQMP evaluates each phase as a distinct DA, requiring LID BMPs to address runoff at time of completion.*

6 Does Project include roads? Yes ☐ No ☒ *If yes, ensure that applicable requirements for transportation projects are addressed (see Appendix A of TGD for WQMP)*

2.2 Property Ownership/Management

Describe the ownership/management of all portions of the project and site. State whether any infrastructure will transfer to public agencies (City, County, Caltrans, etc.) after project completion. State if a homeowners or property owners association will be formed and be responsible for the long-term maintenance of project stormwater facilities. Describe any lot-level stormwater features that will be the responsibility of individual property owners.

Form 2.2-1 Property Ownership/Management

Describe property ownership/management responsible for long-term maintenance of WQMP stormwater facilities:

All portions of the project and site are owned by the Soni 2012 Irrevocable Trusts. The individual at the Soni 2012 Irrevocable Trusts responsible for this project and all related water quality issues is an authorized signatory of the trusts, Vanita Soni Puri. Ms. Puri's contact information is as follows: 1423 Georgina Avenue, Santa Monica, CA 90402; phone number (949) 922-7075; vanitapuri@gmail.com. All maintenance responsibilities, including the implementation and maintenance of BMPs for the Madera at Citrus Trail Residential Project, shall be performed by the Soni 2012 Irrevocable Trusts until such time as ownership of the property is transferred, at which time all BMP implementation and maintenance responsibilities shall be transferred to the new owner. No infrastructure will be transferred to a public agency after the project is complete. A property owner's association (POA) will be formed for long-term maintenance of project stormwater facilities.

2.3 Potential Stormwater Pollutants

Determine and describe expected stormwater pollutants of concern based on land uses and site activities (refer to Table 3-3 in the TGD for WQMP).

Form 2.3-1 Pollutants of Concern

Pollutant	Please check: E=Expected, N=Not Expected		Additional Information and Comments
Pathogens (Bacterial / Virus)	E ☒	N ☐	Potentially caused by animal fecal wastes or the decomposition of excess organic waste. Mitigation measures: (N3) Landscape Management – dispose of grass cuttings and trimmings in trash receptacles to prevent entry to storm drain; (N11) Litter/Debris Control – ensure pet waste is disposed of in trash receptacles; and (N15) Vacuum Sweeping of Private Streets.
Nutrients - Phosphorous	E ☒	N ☐	Potentially caused by use of fertilizers. Mitigation measure: (N3) Landscape Management – implement fertilizer application restrictions.
Nutrients - Nitrogen	E ☒	N ☐	Potentially caused by use of fertilizers. Mitigation measure: (N3) Landscape Management – implement fertilizer application restrictions.
Noxious Aquatic Plants	E ☐	N ☒	
Sediment	E ☒	N ☐	Potentially caused by dirt on pavement being hosed off. Mitigation measures: (N14) Catch Basin Inspection – maintain installed catch basin insert filters; and (N15) Vacuum Sweeping of Private Streets.
Metals	E ☐	N ☒	
Oil and Grease	E ☒	N ☐	Potentially caused by vehicles leaking oil. Mitigation measures: (N14) Catch Basin Inspection – maintain installed catch basin insert filters; and (N15) Vacuum Sweeping of Private Streets.
Trash/Debris	E ☒	N ☐	Potentially caused by trash and biodegradable organic matter (such as leaves, grass cuttings, and food waste) being allowed to enter storm drain system. Mitigation measures: (N3) Landscape Management – dispose of grass cuttings and trimmings in trash receptacles to prevent entry to storm drain; (N11) Litter/Debris Control – ensure trash and food waste is disposed of in trash receptacles; and (N15) Vacuum Sweeping of Private Streets.
Pesticides / Herbicides	E ☒	N ☐	Potentially caused by use of pesticides and herbicides. Mitigation measure: (N3) Landscape Management – implement pesticide and herbicide application restrictions.
Organic Compounds	E ☒	N ☐	Potentially caused by hosing solvents and cleaning compounds off of vehicles or pavement. Mitigation measures: (N2) Activity Restrictions - implement use /activity restrictions for the project through the use of conditions, covenants and restrictions (CCRs); and (N14) Catch Basin Inspection – maintain installed catch basin insert filters.
Other:	E ☐	N ☐	

2.4 Water Quality Credits

A water quality credit program is applicable for certain types of development projects if it is not feasible to meet the requirements for on-site LID. Proponents for eligible projects, as described below, can apply for water quality credits that would reduce project obligations for selecting and sizing other treatment BMP or participating in other alternative compliance programs. Refer to Section 6.2 in the TGD for WQMP to determine if water quality credits are applicable for the project.

Form 2.4-1 Water Quality Credits

[1] Project Types that Qualify for Water Quality Credits: *Select all that apply*

☐ Redevelopment projects that reduce the overall impervious footprint of the project site. [Credit = % impervious reduced]	Higher density development projects ☐Vertical density [20%] ☐7 units/ acre [5%]	☐ Mixed use development, (combination of residential, commercial, industrial, office, institutional, or other land uses which incorporate design principles that demonstrate environmental benefits not realized through single use projects) [20%]	☐Brownfield redevelopment (redevelop real property complicated by presence or potential of hazardous contaminants) [25%]
☐ Redevelopment projects in established historic district, historic preservation area, or similar significant core city center areas [10%]	☐ Transit-oriented developments (mixed use residential or commercial area designed to maximize access to public transportation) [20%]	☐ In-fill projects (conversion of empty lots & other underused spaces < 5 acres, substantially surrounded by urban land uses, into more beneficially used spaces, such as residential or commercial areas) [10%]	☐ Live-Work developments (variety of developments designed to support residential and vocational needs) [20%]

[2] Total Credit % 0 *(Total all credit percentages up to a maximum allowable credit of 50 percent)*

Description of Water Quality Credit Eligibility (if applicable)	N/A

Section 3 Site and Watershed Description

Describe the project site conditions that will facilitate the selection of BMP through an analysis of the physical conditions and limitations of the site and its receiving waters. Identify distinct drainage areas (DA) that collect flow from a portion of the site and describe how runoff from each DA (and sub-watershed DMAs) is conveyed to the site outlet(s). Refer to Section 3.2 in the TGD for WQMP. The form below is provided as an example. Then complete Forms 3.2 and 3.3 for each DA on the project site. ***If the project has more than one drainage area for stormwater management, then complete additional versions of these forms for each DA / outlet.***

Form 3-1 Site Location and Hydrologic Features

Site coordinates *take GPS measurement at approximate center of site*	Latitude 34.063821	Longitude -117.140048	Thomas Bros Map page 608

1 San Bernardino County climatic region: ☒ Valley ☐ Mountain

2 Does the site have more than one drainage area (DA): Yes☒ No☐ *If no, proceed to Form 3-2. If yes, then use this form to show a conceptual schematic describing DMAs and hydrologic feature connecting DMAs to the site outlet(s). An example is provided below that can be modified for proposed project or a drawing clearly showing DMA and flow routing may be attached*

Conveyance	Briefly describe on-site drainage features to convey runoff that is not retained within a DMA
DA1 DMA C flows to DA1 DMA A	*Ex. Bioretention overflow to vegetated bioswale with 4' bottom width, 5:1 side slopes and bed slope of 0.01. Conveys runoff for 1000' through DMA 1 to existing catch basin on SE corner of property*
DA1 to Outlet 1	DA 1 measures 380,199 square feet and comprises the majority of the site. In DA 1, a subsurface infiltration facility will be constructed to retain and infiltrate on site storm water flows, and it will be located immediately to the west of the common open space area near the center of the site. The flows will be collected by catch basins and conveyed, via the on-site storm drain, to the underground infiltration facility. The catch basins will have filter inserts installed to remove sediment, debris, and other pollutants of concern from the storm flows prior to the flows being infiltrated. The infiltration facility will be sized to retain the Design Capture Volume ("DCV"), and will consist of 183 lineal feet of dual 96"perforated CMP pipes placed on a 20' wide gravel bed. (In DA 1, the DCV exceeds the volume reduction needed to meet the HCOC requirement (V_{HCOC}) per San Bernardino County WQMP requirements.) Storm flows that exceed the capacity of this infiltration facility will be directed to a storm drain system that runs southerly to E. Colton Avenue and then westerly in E. Colton Avenue to a proposed catch basin located to the west of the development. The excess storm flows will bubble out of this catch basin into E. Colton Avenue once the hydraulic grade line rises above the street elevation.

DA2 to Outlet 2	DA 2 measures 12,304 square feet and is comprised of a small area at the southwest corner of the site. In DA 2, a subsurface infiltration facility will be constructed under the landscaped area at the southwest corner of the site. The storm water in this area will surface flow to an existing concrete drainage channel that currently outlets to E. Colton Avenue via a parkway culvert. A grated inlet with an insert filter will be installed in the existing drainage channel to collect and pretreat the design storm flows prior to conveying them to the infiltration facility. The infiltration facility will be sized to retain the V_{HCOC}, which exceeds the DCV in DA 2, and will consist of 20 lineal feet of 96" perforated CMP pipe placed on a 10' wide gravel bed. Storm flows that exceed the capacity of this infiltration facility will bypass the inlet and be released to E. Colton Avenue via the existing drainage channel and parkway culvert.

Form 3-2 Existing Hydrologic Characteristics for Drainage Area 1

For Drainage Area 1's sub-watershed DMA, provide the following characteristics ****See the Existing Hydrologic Characteristics Map in Appendix A hereof***	DMA A	DMA B	DMA C	DMA D
1 DMA drainage area (ft^2)	380,199			
2 Existing site impervious area (ft^2)	0			
3 Antecedent moisture condition *For desert areas, use http://www.sbcounty.gov/dpw/floodcontrol/pdf/20100412_map.pdf*	AMC II			
4 Hydrologic soil group *Refer to Watershed Mapping Tool – http://permitrack.sbcounty.gov/wap/*	HSG A			
5 Longest flowpath length (ft)	1,000			
6 Longest flowpath slope (ft/ft)	0.015			
7 Current land cover type(s) *Select from Fig C-3 of Hydrology Manual*	Grass			
8 Pre-developed pervious area condition: *Based on the extent of wet season vegetated cover good >75%; Fair 50-75%; Poor <50% Attach photos of site to support rating.* ****The photos of the site in Appendix A hereof were taken on 10/3/2022 and show the pervious area condition as "Barren." Historical wet season photos of the site, which are also included in Appendix A hereof, show the pervious area condition as "Grass-Good."***	Good			

Form 3-2 Existing Hydrologic Characteristics for Drainage Area 2

For Drainage Area 1's sub-watershed DMA, provide the following characteristics ***See the Existing Hydrologic Characteristics Map in Appendix A hereof***	DMA A	DMA B	DMA C	DMA D
1 DMA drainage area (ft^2)	12,304			
2 Existing site impervious area (ft^2)	0			
3 Antecedent moisture condition *For desert areas, use* *http://www.sbcounty.gov/dpw/floodcontrol/pdf/20100412_map.pdf*	AMC II			
4 Hydrologic soil group *Refer to Watershed Mapping Tool – http://permitrack.sbcounty.gov/wap/*	HSG B			
5 Longest flowpath length (ft)	155			
6 Longest flowpath slope (ft/ft)	0.025			
7 Current land cover type(s) *Select from Fig C-3 of Hydrology Manual*	Grass			
8 Pre-developed pervious area condition: *Based on the extent of wet season vegetated cover good >75%; Fair 50-75%; Poor <50% Attach photos of site to support rating* ****The photos of the site in Appendix A hereof were taken on 10/3/2022 and show the pervious area condition as "Barren." Historical wet season photos of the site, which are also included in Appendix A hereof, show the pervious area condition as "Grass-Good."***	Good			

Form 3-3 Watershed Description for Drainage Area 1

Receiving waters *Refer to Watershed Mapping Tool -* *http://permitrack.sbcounty.gov/wap/* *See 'Drainage Facilities" link at this website*	Zanja Creek; Mission Channel; Santa Ana River Reach 4; Santa Ana River Reach 3
Applicable TMDLs *Refer to Local Implementation Plan*	Santa Ana River Reach 3—Indicator Bacteria
303(d) listed impairments *Refer to Local Implementation Plan and Watershed Mapping Tool –* *http://permitrack.sbcounty.gov/wap/ and State Water Resources Control Board website – http://www.waterboards.ca.gov/santaana/water_issues/programs/tmdl/index.shtml*	Santa Ana River Reach 4—Indicator Bacteria Santa Ana River Reach 3—Copper; Indicator Bacteria; Lead
Environmentally Sensitive Areas (ESA) *Refer to Watershed Mapping Tool –* *http://permitrack.sbcounty.gov/wap/*	None
Unlined Downstream Water Bodies *Refer to Watershed Mapping Tool –* *http://permitrack.sbcounty.gov/wap/*	Zanja Creek; Mission Channel; Santa Ana River Reach 4; Santa Ana River Reach 3
Hydrologic Conditions of Concern	☒ Yes *Complete Hydrologic Conditions of Concern (HCOC) Assessment. Include Forms 4.2-2 through Form 4.2-5 and Hydromodification BMP Form 4.3-10 in submittal* ☐ No
Watershed–based BMP included in a RWQCB approved WAP	☐ Yes *Attach verification of regional BMP evaluation criteria in WAP* • *More Effective than On-site LID* • *Remaining Capacity for Project DCV* • *Upstream of any Water of the US* • *Operational at Project Completion* • *Long-Term Maintenance Plan* ☒ No

Form 3-3 Watershed Description for Drainage Area 2

Receiving waters *Refer to Watershed Mapping Tool -* *http://permitrack.sbcounty.gov/wap/* *See 'Drainage Facilities" link at this website*	Zanja Creek; Mission Channel; Santa Ana River Reach 4; Santa Ana River Reach 3
Applicable TMDLs *Refer to Local Implementation Plan*	Santa Ana River Reach 3—Indicator Bacteria
303(d) listed impairments *Refer to Local Implementation Plan and Watershed Mapping Tool –* *http://permitrack.sbcounty.gov/wap/ and State Water Resources Control Board website – http://www.waterboards.ca.gov/santaana/water_issues/programs/tmdl/index.shtml*	Santa Ana River Reach 4—Indicator Bacteria Santa Ana River Reach 3—Copper; Indicator Bacteria; Lead
Environmentally Sensitive Areas (ESA) *Refer to Watershed Mapping Tool –* *http://permitrack.sbcounty.gov/wap/*	None
Unlined Downstream Water Bodies *Refer to Watershed Mapping Tool –* *http://permitrack.sbcounty.gov/wap/*	Zanja Creek; Mission Channel; Santa Ana River Reach 4; Santa Ana River Reach 3
Hydrologic Conditions of Concern	☒ Yes *Complete Hydrologic Conditions of Concern (HCOC) Assessment. Include Forms 4.2-2 through Form 4.2-5 and Hydromodification BMP Form 4.3-10 in submittal* ☐ No
Watershed–based BMP included in a RWQCB approved WAP	☐ Yes *Attach verification of regional BMP evaluation criteria in WAP* • *More Effective than On-site LID* • *Remaining Capacity for Project DCV* • *Upstream of any Water of the US* • *Operational at Project Completion* • *Long-Term Maintenance Plan* ☒ No

Section 4 Best Management Practices (BMP)

4.1 Source Control BMP

4.1.1 Pollution Prevention

Non-structural and structural source control BMP are required to be incorporated into all new development and significant redevelopment projects. Form 4.1-1 and 4.1-2 are used to describe specific source control BMPs used in the WQMP or to explain why a certain BMP is not applicable. Table 7-3 of the TGD for WQMP provides a list of applicable source control BMP for projects with specific types of potential pollutant sources or activities. The source control BMP in this table must be implemented for projects with these specific types of potential pollutant sources or activities.

The preparers of this WQMP have reviewed the source control BMP requirements for new development and significant redevelopment projects. The preparers have also reviewed the specific BMP required for project as specified in Forms 4.1-1 and 4.1-2. All applicable non-structural and structural source control BMP shall be implemented in the project.

Form 4.1-1 Non-Structural Source Control BMPs

Identifier	Name	Check One		Describe BMP Implementation OR, if not applicable, state reason
		Included	Not Applicable	
N1	Education of Property Owners, Tenants and Occupants on Stormwater BMPs	☒	☐	The owner shall be familiar with the contents of this WQMP and shall provide BMP information materials to the first residents/occupants/tenants on management practices for residential developments that contribute to the protection of stormwater quality. (See Appendix K in Section 6.4 for the BMP Educational Materials.) For developments with POA and residential projects of more than fifty (50) dwelling units, project conditions of approval will require that the POA periodically provide environmental awareness education materials, made available by the municipalities, to all members. Among other things, these materials will describe the use of chemicals (including household type) that should be limited to the property, with no discharge of wastes via hosing or other direct discharge to gutters, catch basins and storm drains. The applicable educational materials in Appendix K are the following: Sustainable Practices for Landscape Maintenance Brochure for Homeowners; Toxic Household Waste Brochure for Homeowners; and Pet Waste Brochure for Homeowners.
N2	Activity Restrictions	☒	☐	The owner will implement use /activity restrictions for the project for the purpose of surface water quality protection through the use of conditions, covenants and restrictions (CCRs). The applicable educational materials in Appendix K are the following: Sustainable Practices for Landscape Maintenance Brochure for Homeowners; Toxic Household Waste Brochure for Homeowners; and Pet Waste Brochure for Homeowners.
N3	Landscape Management BMPs	☒	☐	The owner will identify on-going landscape maintenance requirements consistent with applicable local stormwater quality ordinances that will include fertilizer and/or pesticide application restrictions and mowing and trimmings containment and disposal. The applicable educational materials in Appendix K are the following: Commercial Landscape Maintenance Fact Sheet; Stormwater Management Practices for Commercial Landscape Maintenance Brochure; Sustainable Practices for Landscape Maintenance Brochure for Homeowners; Pet Waste Brochure for Homeowners; SD-10 Site Design & Landscape Planning; and SD-12 Efficient Irrigation.

Form 4.1-1 Non-Structural Source Control BMPs

Identifier	Name	Check One		Describe BMP Implementation OR, if not applicable, state reason
		Included	Not Applicable	
N4	BMP Maintenance	☒	☐	The owner will be responsible for implementation of each non- structural BMP and scheduled cleaning and/or maintenance of all structural BMP facilities per the maintenance narratives in Form 5-1 of this document. The applicable educational materials in Appendix K are the following: Commercial Landscape Maintenance Fact Sheet; Stormwater Management Practices for Commercial Landscape Maintenance Brochure; Sustainable Practices for Landscape Maintenance Brochure for Homeowners; Pet Waste Brochure for Homeowners; SC-35 Safer Alternative Products; SC-41 Building & Grounds Maintenance; SC-42 Building Repair and Construction; SC-43 Parking / Storage Area Maintenance; SC-44 Drainage System Maintenance; SD-10 Site Design & Landscape Planning; SD-12 Efficient Irrigation; and SD-13 Storm Drain Signage.
N5	Title 22 CCR Compliance (How development will comply)	☐	☒	Not applicable. No hazardous materials are anticipated to be present at the proposed project.
N6	Local Water Quality Ordinances	☒	☐	The owner will comply with any applicable local water quality ordinances. The applicable educational materials in Appendix K are the following: Regulatory Information Fact Sheet.
N7	Spill Contingency Plan	☒	☐	The owner will prepare a Spill Contingency Plan based on specified types of building or suite occupancies. The Plan will mandate stockpiling of cleanup materials, notification of responsible agencies, disposal of cleanup materials, documentation, etc. The applicable educational materials in Appendix K are the following: Construction & Development Fact Sheet; SC-41 Building & Grounds Maintenance; SC-42 Building Repair and Construction; and SC-43 Parking / Storage Area Maintenance.
N8	Underground Storage Tank Compliance	☐	☒	Not applicable. No underground storage tanks are proposed.
N9	Hazardous Materials Disclosure Compliance	☐	☒	Not applicable. No hazardous materials are currently anticipated to be used or produced at the proposed project.
N10	Uniform Fire Code Implementation	☒	☐	The owner shall require all residents to abide by the Uniform Fire Code.

Form 4.1-1 Non-Structural Source Control BMPs

Identifier	Name	Check One		Describe BMP Implementation OR, if not applicable, state reason
		Included	Not Applicable	
N11	Litter/Debris Control Program	☒	☐	The owner/POA will implement trash management and litter control procedures throughout the site aimed at reducing pollution of drainage water. The owner/POA may contract with its landscape maintenance firm to provide this service during regularly scheduled maintenance, which should consist of litter patrol, emptying of trash receptacles in common areas, and noting/reporting trash disposal violations by tenants/homeowners. The applicable educational materials in Appendix K are the following: Commercial Landscape Maintenance Fact Sheet; Stormwater Management Practices for Commercial Landscape Maintenance Brochure; Sustainable Practices for Landscape Maintenance Brochure for Homeowners; Pet Waste Brochure for Homeowners; SC-41 Building & Grounds Maintenance; SC-42 Building Repair and Construction; and SC-43 Parking / Storage Area Maintenance.
N12	Employee Training	☐	☒	Not applicable. No employees are anticipated.
N13	Housekeeping of Loading Docks	☐	☒	Not applicable. No loading docks are proposed.
N14	Catch Basin Inspection Program	☒	☐	On-site catch basins shall be inspected, cleaned and maintained on an annual basis, in the early fall prior to the start of the rainy season, and before and after all major storms. Catch basins shall be monitored for evidence of illegal dumping on an as-needed frequency. The applicable educational materials in Appendix K are the following: SC-44 Drainage System Maintenance.
N15	Vacuum Sweeping of Private Streets and Parking Lots	☒	☐	The owner/POA will ensure that the project's drive aisles and parking areas will be swept on a monthly basis, or more often if necessary, using a vacuum assisted sweeper. The applicable educational materials in Appendix K are the following: SC-43 Parking / Storage Area Maintenance.
N16	Other Non-structural Measures for Public Agency Projects	☐	☒	Not applicable. The project is not a Public Agency Project.
N17	Comply with all other applicable NPDES permits	☒	☐	The owner shall comply with the statewide General Construction Permit during the entire period of construction by filing an NOI and SWPPP with the State Water Board and complying with all BMP implementation and reporting requirements. The applicable educational materials in Appendix K are the following: Regulatory Information Fact Sheet.

Form 4.1-2 Structural Source Control BMPs

Identifier	Name	Check One		Describe BMP Implementation OR, If not applicable, state reason
		Included	Not Applicable	
S1	Provide storm drain system stencilling and signage (CASQA New Development BMP Handbook SD-13)	☒	☐	Provide storm drain system stenciling and signage. The stencil shall be blue on a white background with lettering 2-1/2'" in height and reading "No Dumping - Drains to River." A fish or similar water dependent creature silhouette may be included subject to City approval. In lieu of a stencil, a catch basin curb marker, circular or rectangular, at least 4" in height or diameter, may be used. The message will be the same and is subject to City approval. A painted circular stencil shall not be bigger than 8" in diameter. Legibility will be checked and repainted annually. The applicable educational materials in Appendix K are the following: SD-13 Storm Drain Signage.
S2	Design and construct outdoor material storage areas to reduce pollution introduction (CASQA New Development BMP Handbook SD-34)	☐	☒	Not applicable. No outdoor material storage areas are proposed.
S3	Design and construct trash and waste storage areas to reduce pollution introduction (CASQA New Development BMP Handbook SD-32)	☐	☒	Not applicable. No trash or waste storage areas are proposed.
S4	Use efficient irrigation systems & landscape design, water conservation, smart controllers, and source control (Statewide Model Landscape Ordinance; CASQA New Development BMP Handbook SD-12)	☒	☐	Irrigation systems shall include reducers or shut off valves triggered by a pressure drop. Timers will be used to avoid over watering and watering cycles shall be adjusted seasonally. Plants with similar watering requirements will be grouped. and native or drought tolerant species will be used where appropriate. The applicable educational materials in Appendix K are the following: SD-12 Efficient Irrigation.
S5	Finish grade of landscaped areas at a minimum of 1-2 inches below top of curb, sidewalk, or pavement	☒	☐	Landscaped areas will be finish-graded at a minimum of 1-2 inches below top of curb or sidewalk for increased retention of stormwater/irrigation water. The applicable educational materials in Appendix K are the following: SD-10 Site Design & Landscape Planning.
S6	Protect slopes and channels and provide energy dissipation (CASQA New Development BMP Handbook SD-10)	☐	☒	Not applicable. The site has no slopes or channels.
S7	Covered dock areas (CASQA New Development BMP Handbook SD-31)	☐	☒	Not applicable. No loading docks are proposed.

Form 4.1-2 Structural Source Control BMPs

Identifier	Name	Check One		Describe BMP Implementation OR, If not applicable, state reason
		Included	Not Applicable	
S8	Covered maintenance bays with spill containment plans (CASQA New Development BMP Handbook SD-31)	☐	☒	Not applicable. No maintenance bays are proposed.
S9	Vehicle wash areas with spill containment plans (CASQA New Development BMP Handbook SD-33)	☐	☒	Not applicable. No vehicle wash areas are proposed.
S10	Covered outdoor processing areas (CASQA New Development BMP Handbook SD-36)	☐	☒	Not applicable. No outdoor processing areas are proposed.
S11	Equipment wash areas with spill containment plans (CASQA New Development BMP Handbook SD-33)	☐	☒	Not applicable. No equipment wash areas are proposed.
S12	Fueling areas (CASQA New Development BMP Handbook SD-30)	☐	☒	Not applicable. No fueling areas are proposed.
S13	Hillside landscaping (CASQA New Development BMP Handbook SD-10)	☐	☒	Not applicable. No hillside landscaping is proposed (the site has no hills).
S14	Wash water control for food preparation areas	☐	☒	Not applicable. No food preparation areas are proposed.
S15	Community car wash racks (CASQA New Development BMP Handbook SD-33)	☐	☒	Not applicable. No community car wash racks are proposed.

4.1.2 Preventative LID Site Design Practices

Site design practices associated with new LID requirements in the MS4 Permit should be considered in the earliest phases of a project. Preventative site design practices can result in smaller DCV for LID BMP and hydromodification control BMP by reducing runoff generation. Describe site design and drainage plan including:

- A narrative of site design practices utilized or rationale for not using practices
- A narrative of how site plan incorporates preventive site design practices
- Include an attached Site Plan layout which shows how preventative site design practices are included in WQMP

Refer to Section 5.2 of the TGD for WQMP for more details.

Form 4.1-3 Preventative LID Site Design Practices Checklist

Site Design Practices
If yes, explain how preventative site design practice is addressed in project site plan. If no, other LID BMPs must be selected to meet targets

Minimize impervious areas: Yes ☒ No ☐
Explanation: The width of the drive aisles and sidewalks for the proposed development has been reduced to the maximum extent practicable. Further, landscaping is planned to be installed to the maximum extent practicable.

Maximize natural infiltration capacity: Yes ☒ No ☐
Explanation: The site is underlain by soils with a design infiltration rate of 3.99 inches per hour, and all stormwater flows will be infiltrated on-site via underground infiltration facilities (after pretreatment utilizing catch basin filter inserts).

Preserve existing drainage patterns and time of concentration: Yes ☒ No ☐
Explanation: The existing drainage patterns have been preserved.

Disconnect impervious areas: Yes ☒ No ☐
Explanation: All impervious area runoff for a design storm event will be captured and directed into the underground infiltration systems which will disconnect impervious areas.

Protect existing vegetation and sensitive areas: Yes ☐ No ☒
Explanation: The existing vegetation at the site consists mainly of grasses that only grow during the rainy season. This vegetation cannot be protected during the development of the site.

Re-vegetate disturbed areas: Yes ☒ No ☐
Explanation: Landscaping is proposed to the maximum extent practicable.

Minimize unnecessary compaction in stormwater retention/infiltration basin/trench areas: Yes ☒ No ☐
Explanation: The areas where the underground infiltration facilities are to be located will not be compacted more than is necessary.

Utilize vegetated drainage swales in place of underground piping or imperviously lined swales: Yes ☐ No ☒
Explanation: No vegetated drainage swales are proposed.

Stake off areas that will be used for landscaping to minimize compaction during construction : Yes ☒ No ☐
Explanation: The proposed landscape areas will not be compacted more than is necessary.

4.2 Project Performance Criteria

The purpose of this section of the Project WQMP is to establish targets for post-development hydrology based on performance criteria specified in the MS4 Permit. These targets include runoff volume for water quality control (referred to as LID design capture volume), and runoff volume, time of concentration, and peak runoff for protection of any downstream waterbody segments with a HCOC. ***If the project has more than one outlet for stormwater runoff, then complete additional versions of these forms for each DA / outlet.***

Methods applied in the following forms include:

- For LID BMP Design Capture Volume (DCV), the San Bernardino County Stormwater Program requires use of the P_6 method (MS4 Permit Section XI.D.6a.ii) – Form 4.2-1
- For HCOC pre- and post-development hydrologic calculation, the San Bernardino County Stormwater Program requires the use of the Rational Method (San Bernardino County Hydrology Manual Section D). Forms 4.2-2 through Form 4.2-5 calculate hydrologic variables including runoff volume, time of concentration, and peak runoff from the project site pre- and post-development using the Hydrology Manual Rational Method approach. For projects greater than 640 acres (1.0 mi^2), the Rational Method and these forms should not be used. For such projects, the Unit Hydrograph Method (San Bernardino County Hydrology Manual Section E) shall be applied for hydrologic calculations for HCOC performance criteria.

Refer to Section 4 in the TGD for WQMP for detailed guidance and instructions.

Form 4.2-1 LID BMP Performance Criteria for Design Capture Volume (DA 1)

1 Project area DA 1 (ft^2): 380,199	2 Imperviousness after applying preventative site design practices (Imp%): 80%	3 Runoff Coefficient (Rc): 0.599 *$R_c = 0.858(Imp\%)^{\wedge 3}-0.78(Imp\%)^{\wedge 2}+0.774(Imp\%)+0.04$*
4 Determine 1-hour rainfall depth for a 2-year return period $P_{2yr\text{-}1hr}$ (in): 0.491 http://hdsc.nws.noaa.gov/hdsc/pfds/sa/sca_pfds.html		
5 Compute P_6, Mean 6-hr Precipitation (inches): 0.727 *P_6 = Item 4 *C_1, where C_1 is a function of site climatic region specified in Form 3-1 Item 1 (Valley = 1.4807; Mountain = 1.909; Desert = 1.2371)*		
6 Drawdown Rate *Use 48 hours as the default condition. Selection and use of the 24 hour drawdown time condition is subject to approval by the local jurisdiction. The necessary BMP footprint is a function of drawdown time. While shorter drawdown times reduce the performance criteria for LID BMP design capture volume, the depth of water that can be stored is also reduced.*		24-hrs ☐ 48-hrs ☒
7 Compute design capture volume, DCV (ft^3): 27,084 *DCV = 1/12 * [Item 1* Item 3 *Item 5 * C_2], where C_2 is a function of drawdown rate (24-hr = 1.582; 48-hr = 1.963)* *Compute separate DCV for each outlet from the project site per schematic drawn in Form 3-1 Item 2*		

Form 4.2-1 LID BMP Performance Criteria for Design Capture Volume (DA 2)

1 Project area DA 1 (ft^2): 12,304	**2** Imperviousness after applying preventative site design practices (Imp%): 80%	**3** Runoff Coefficient (Rc): 0.599 *$R_c = 0.858(Imp\%)^{\wedge 3} - 0.78(Imp\%)^{\wedge 2} + 0.774(Imp\%) + 0.04$*

4 Determine 1-hour rainfall depth for a 2-year return period $P_{2yr\text{-}1hr}$ (in): 0.491 http://hdsc.nws.noaa.gov/hdsc/pfds/sa/sca_pfds.html

5 Compute P_6, Mean 6-hr Precipitation (inches): 0.727

*P_6 = Item 4 *C_1, where C_1 is a function of site climatic region specified in Form 3-1 Item 1 (Valley = 1.4807; Mountain = 1.909; Desert = 1.2371)*

6 Drawdown Rate

Use 48 hours as the default condition. Selection and use of the 24 hour drawdown time condition is subject to approval by the local jurisdiction. The necessary BMP footprint is a function of drawdown time. While shorter drawdown times reduce the performance criteria for LID BMP design capture volume, the depth of water that can be stored is also reduced.

24-hrs ☐
48-hrs ☒

7 Compute design capture volume, DCV (ft^3): 876

*DCV = 1/12 * [Item 1* Item 3 *Item 5 * C_2], where C_2 is a function of drawdown rate (24-hr = 1.582; 48-hr = 1.963)*
Compute separate DCV for each outlet from the project site per schematic drawn in Form 3-1 Item 2

Form 4.2-2 Summary of HCOC Assessment (DA 1)

Does project have the potential to cause or contribute to an HCOC in a downstream channel: Yes ☒ No ☐

Go to: *http://permitrack.sbcounty.gov/wap/*

If "Yes", then complete HCOC assessment of site hydrology for 2yr storm event using Forms 4.2-3 through 4.2-5 and insert results below

(Forms 4.2-3 through 4.2-5 may be replaced by computer software analysis based on the San Bernardino County Hydrology Manual)

If "No," then proceed to Section 4.3 Project Conformance Analysis

Condition	Runoff Volume (ft^3)	Time of Concentration (min)	Peak Runoff (cfs)
Pre-developed	**1** 2,615 *Form 4.2-3 Item 12*	**2** 34.75 *Form 4.2-4 Item 13*	**3** -1.92 *Form 4.2-5 Item 10*
Post-developed	**4** 28,119 *Form 4.2-3 Item 13*	**5** 13.59 *Form 4.2-4 Item 14*	**6** 8.30 *Form 4.2-5 Item 14*
Difference	**7** 25,504 *Item 4 – Item 1*	**8** 21.16 *Item 2 – Item 5*	**9** 10.22 *Item 6 – Item 3*
Difference (as % of pre-developed)	**10** 975% *Item 7 / Item 1*	**11** 60.9% *Item 8 / Item 2*	**12** -532% *Item 9 / Item 3*

Form 4.2-2 Summary of HCOC Assessment (DA 2)

Does project have the potential to cause or contribute to an HCOC in a downstream channel: Yes ☒ No ☐

Go to: *http://permitrack.sbcounty.gov/wap/*

If "Yes", then complete HCOC assessment of site hydrology for 2yr storm event using Forms 4.2-3 through 4.2-5 and insert results below

(Forms 4.2-3 through 4.2-5 may be replaced by computer software analysis based on the San Bernardino County Hydrology Manual)

If "No," then proceed to Section 4.3 Project Conformance Analysis

Condition	Runoff Volume (ft^3)	Time of Concentration (min)	Peak Runoff (cfs)
Pre-developed	**1** 105 *Form 4.2-3 Item 12*	**2** 14.8 *Form 4.2-4 Item 13*	**3** 0.12 *Form 4.2-5 Item 10*
Post-developed	**4** 1,218 *Form 4.2-3 Item 13*	**5** 7.75 *Form 4.2-4 Item 14*	**6** 0.385 *Form 4.2-5 Item 14*
Difference	**7** 1,113 *Item 4 – Item 1*	**8** 7.05 *Item 2 – Item 5*	**9** 0.265 *Item 6 – Item 3*
Difference (as % of pre-developed)	**10** 1060% *Item 7 / Item 1*	**11** 47.6% *Item 8 / Item 2*	**12** 221% *Item 9 / Item 3*

Form 4.2-3 HCOC Assessment for Runoff Volume (DA 1)

Weighted Curve Number Determination for: Pre-developed DA	DMA A	DMA B	DMA C	DMA D	DMA E	DMA F	DMA G	DMA H
1a Land Cover type	Grass (Good)							
2a Hydrologic Soil Group (HSG)	HSG A							
3a DMA Area, ft^2 *sum of areas of DMA should equal area of DA*	380,199							
4a Curve Number (CN) *use Items 1 and 2 to select the appropriate CN from Appendix C-2 of the TGD for WQMP*	38							
Weighted Curve Number Determination for: Post-developed DA	DMA A	DMA B	DMA C	DMA D	DMA E	DMA F	DMA G	DMA H
1b Land Cover type	Pavement/Rooftop	Commercial L/S						
2b Hydrologic Soil Group (HSG)	HSG A	HSG A						
3b DMA Area, ft^2 *sum of areas of DMA should equal area of DA*	304,159	76,040						
4b Curve Number (CN) *use Items 5 and 6 to select the appropriate CN from Appendix C-2 of the TGD for WQMP*	98	32						

5 Pre-Developed area-weighted CN: 38	**7** Pre-developed soil storage capacity, S (in): 16.32 *S = (1000 / Item 5) - 10*	**9** Initial abstraction, I_a (in): 3.26 I_a *= 0.2 * Item 7*
6 Post-Developed area-weighted CN: 84.8	**8** Post-developed soil storage capacity, S (in): 1.79 *S = (1000 / Item 6) - 10*	**10** Initial abstraction, I_a (in): 0.36 I_a *= 0.2 * Item 8*

11 Precipitation for 2 yr, 24 hr storm (in): 2.14

Go to: http://hdsc.nws.noaa.gov/hdsc/pfds/sa/sca_pfds.html

12 Pre-developed Volume (ft^3): 2,615

V_{pre} *=(1 / 12) * (Item sum of Item 3) * [(Item 11 – Item 9)^2 / ((Item 11 – Item 9 + Item 7)*

13 Post-developed Volume (ft^3): 28,119

V_{pre} *=(1 / 12) * (Item sum of Item 3) * [(Item 11 – Item 10)^2 / ((Item 11 – Item 10 + Item 8)*

14 Volume Reduction needed to meet HCOC Requirement, (ft^3): 24,098

V_{HCOC} *= (Item 13 * 0.95) – Item 12*

Form 4.2-3 HCOC Assessment for Runoff Volume (DA 2)

Weighted Curve Number Determination for: Pre-developed DA	DMA A	DMA B	DMA C	DMA D	DMA E	DMA F	DMA G	DMA H
1a Land Cover type	Grass (Good)							
2a Hydrologic Soil Group (HSG)	HSG B							
3a DMA Area, ft^2 *sum of areas of DMA should equal area of DA*	12,304							
4a Curve Number (CN) *use Items 1 and 2 to select the appropriate CN from Appendix C-2 of the TGD for WQMP*	61							
Weighted Curve Number Determination for: Post-developed DA	DMA A	DMA B	DMA C	DMA D	DMA E	DMA F	DMA G	DMA H
1b Land Cover type	Pavement/Rooftop	Commercial L/S						
2b Hydrologic Soil Group (HSG)	HSG B	HSG B						
3b DMA Area, ft^2 *sum of areas of DMA should equal area of DA*	9,843	2,461						
4b Curve Number (CN) *use Items 5 and 6 to select the appropriate CN from Appendix C-2 of the TGD for WQMP*	98	56						

5 Pre-Developed area-weighted CN: 61	**7** Pre-developed soil storage capacity, S (in): 6.39 *S = (1000 / Item 5) - 10*	**9** Initial abstraction, I_a (in): 1.28 I_a *= 0.2 * Item 7*
6 Post-Developed area-weighted CN: 89.6	**8** Post-developed soil storage capacity, S (in): 1.16 *S = (1000 / Item 6) - 10*	**10** Initial abstraction, I_a (in): 0.23 I_a *= 0.2 * Item 8*

11 Precipitation for 2 yr, 24 hr storm (in): 2.14

Go to: http://hdsc.nws.noaa.gov/hdsc/pfds/sa/sca_pfds.html

12 Pre-developed Volume (ft^3): 105

V_{pre} *=(1 / 12) * (Item sum of Item 3) * [(Item 11 – Item 9)^2 / ((Item 11 – Item 9 + Item 7)*

13 Post-developed Volume (ft^3): 1,218

V_{pre} *=(1 / 12) * (Item sum of Item 3) * [(Item 11 – Item 10)^2 / ((Item 11 – Item 10 + Item 8)*

14 Volume Reduction needed to meet HCOC Requirement, (ft^3): 1,052

V_{HCOC} *= (Item 13 * 0.95) – Item 12*

Form 4.2-4 HCOC Assessment for Time of Concentration (DA 1)

Compute time of concentration for pre and post developed conditions for each DA *(For projects using the Hydrology Manual complete the form below)*

Variables	Pre-developed DA1 *Use additional forms if there are more than 4 DMA*				Post-developed DA1 *Use additional forms if there are more than 4 DMA*			
	DMA A	DMA B	DMA C	DMA D	DMA A	DMA B	DMA C	DMA D
1 Length of flowpath (ft) *Use Form 3-2 Item 5 for pre-developed condition*	1,000				679			
2 Change in elevation (ft)	14.9				3.4			
3 Slope (ft/ft), S_o *= Item 2 / Item 1*	0.015				0.005			
4 Land cover	Undeveloped (Good Cover)				Single-Family (PI = 80)			
5 Initial DMA Time of Concentration (min) *Appendix C-1 of the TGD for WQMP* ***(See Appendix P for Nomographs)***	34.5				12.5			
6 Length of conveyance from DMA outlet to project site outlet (ft) *May be zero if DMA outlet is at project site outlet*	62				530			
7 Cross-sectional area of channel (ft^2)	12.56				12.56			
8 Wetted perimeter of channel (ft)	12.56				12.57			
9 Manning's roughness of channel (n)	0.045				0.013			
10 Channel flow velocity (ft/sec) V_{fps} *= (1.49 / Item 9) * (Item 7/Item 8)^0.67 * (Item 3)^0.5*	4.06				8.1			
11 Travel time to outlet (min) T_t *= Item 6 / (Item 10 * 60)*	0.25				1.09			
12 Total time of concentration (min) T_c *= Item 5 + Item 11*	34.75				13.59			

13 Pre-developed time of concentration (min): 34.75 *Minimum of Item 12 pre-developed DMA*

14 Post-developed time of concentration (min): 13.59 *Minimum of Item 12 post-developed DMA*

15 Additional time of concentration needed to meet HCOC requirement (min): 19.42 T_{C-HCOC} *= (Item 13 * 0.95) – Item 14*

Form 4.2-4 HCOC Assessment for Time of Concentration (DA 2)

Compute time of concentration for pre and post developed conditions for each DA *(For projects using the Hydrology Manual complete the form below)*

Variables	Pre-developed DA2 *Use additional forms if there are more than 4 DMA*				Post-developed DA2 *Use additional forms if there are more than 4 DMA*			
	DMA A	DMA B	DMA C	DMA D	DMA A	DMA B	DMA C	DMA D
1 Length of flowpath (ft) *Use Form 3-2 Item 5 for pre-developed condition*	155				205			
2 Change in elevation (ft)	3.9				1.03			
3 Slope (ft/ft), S_o *= Item 2 / Item 1*	0.025				0.005			
4 Land cover	Undeveloped (Good Cover)				Single-Family (PI = 80)			
5 Initial DMA Time of Concentration (min) *Appendix C-1 of the TGD for WQMP* ***(See Appendix P for Nomographs)***	14.8				7.75			
6 Length of conveyance from DMA outlet to project site outlet (ft) *May be zero if DMA outlet is at project site outlet*	0				0			
7 Cross-sectional area of channel (ft^2)	12.56				8			
8 Wetted perimeter of channel (ft)	12.56				6.4			
9 Manning's roughness of channel (n)	0.045				0.013			
10 Channel flow velocity (ft/sec) $V_{fps} = (1.49 / \text{Item } 9) * (\text{Item } 7/\text{Item } 8)^{\wedge 0.67} * (\text{Item } 3)^{\wedge 0.5}$	5.24				9.4			
11 Travel time to outlet (min) T_t *= Item 6 / (Item 10 * 60)*	0				0			
12 Total time of concentration (min) T_c *= Item 5 + Item 11*	14.8				7.75			

13 Pre-developed time of concentration (min): 14.8 *Minimum of Item 12 pre-developed DMA*

14 Post-developed time of concentration (min): 7.75 *Minimum of Item 12 post-developed DMA*

15 Additional time of concentration needed to meet HCOC requirement (min): 6.31 $T_{C\text{-}HCOC}$ *= (Item 13 * 0.95) – Item 14*

Form 4.2-5 HCOC Assessment for Peak Runoff (DA 1)

Compute peak runoff for pre- and post-developed conditions

Variables		Pre-developed DA to Project Outlet (*Use additional forms if more than 3 DMA)*			Post-developed DA to Project Outlet (*Use additional forms if more than 3 DMA)*		
		DMA A	DMA B	DMA C	DMA A	DMA B	DMA C
1 Rainfall Intensity for storm duration equal to time of concentration *I_{peak} = 10^(LOG Form 4.2-1 Item 4 - 0.6 LOG Form 4.2-4 Item 5 /60)*		0.684			1.258		
2 Drainage Area of each DMA (Acres) *For DMA with outlet at project site outlet, include upstream DMA (Using example schematic in Form 3-1, DMA A will include drainage from DMA C)*		8.67			8.67		
3 Ratio of pervious area to total area *For DMA with outlet at project site outlet, include upstream DMA (Using example schematic in Form 3-1, DMA A will include drainage from DMA C)*		1			0.20		
4 Pervious area infiltration rate (in/hr) *Use pervious area CN and antecedent moisture condition with Appendix C-3 of the TGD for WQMP*		0.93			0.97		
5 Maximum loss rate (in/hr) *F_m = Item 3 * Item 4* *Use area-weighted F_m from DMA with outlet at project site outlet, include upstream DMA (Using example schematic in Form 3-1, DMA A will include drainage from DMA C)*		0.93			0.194		
6 Peak Flow from DMA (cfs) *Q_p =Item 2 * 0.9 * (Item 1 - Item 5)*		-1.92			8.30		
7 Time of concentration adjustment factor for other DMA to site discharge point *Form 4.2-4 Item 12 DMA / Other DMA upstream of site discharge point (If ratio is greater than 1.0, then use maximum value of 1.0)*	DMA A	*n/a*			*n/a*		
	DMA B		*n/a*			*n/a*	
	DMA C			*n/a*			*n/a*

8 Pre-developed Q_p at T_c for DMA A: -1.92

*Q_p = Item 6_{DMAA} + [Item 6_{DMAB} * (Item 1_{DMAA} - Item 5_{DMAB})/(Item 1_{DMAB} - Item 5_{DMAB})* Item $7_{DMAA/2}$] + [Item 6_{DMAC} * (Item 1_{DMAA} - Item 5_{DMAC})/(Item 1_{DMAC} - Item 5_{DMAC})* Item $7_{DMAA/3}$]*

9 Pre-developed Q_p at T_c for DMA B:

*Q_p = Item 6_{DMAB} + [Item 6_{DMAA} * (Item 1_{DMAB} - Item 5_{DMAA})/(Item 1_{DMAA} - Item 5_{DMAA})* Item $7_{DMAB/1}$] + [Item 6_{DMAC} * (Item 1_{DMAB} - Item 5_{DMAC})/(Item 1_{DMAC} - Item 5_{DMAC})* Item $7_{DMAB/3}$]*

10 Pre-developed Q_p at T_c for DMA C:

*Q_p = Item 6_{DMAC} + [Item 6_{DMAA} * (Item 1_{DMAC} - Item 5_{DMAA})/(Item 1_{DMAA} - Item 5_{DMAA})* Item $7_{DMAC/1}$] + [Item 6_{DMAB} * (Item 1_{DMAC} - Item 5_{DMAB})/(Item 1_{DMAB} - Item 5_{DMAB})* Item $7_{DMAC/2}$]*

10 Peak runoff from pre-developed condition confluence analysis (cfs): -1.92 *Maximum of Item 8, 9, and 10 (including additional forms as needed)*

11 Post-developed Q_p at T_c for DMA A: 8.30 *Same as Item 8 for post-developed values*

12 Post-developed Q_p at T_c for DMA B: *Same as Item 9 for post-developed values*

13 Post-developed Q_p at T_c for DMA C: *Same as Item 10 for post-developed values*

14 Peak runoff from post-developed condition confluence analysis (cfs): 8.30 *Maximum of Item 11, 12, and 13 (including additional forms as needed)*

15 Peak runoff reduction needed to meet HCOC Requirement (cfs): 9.81 Q_{p-HCOC} = *(Item 14 * 0.95) – Item 10*

Form 4.2-5 HCOC Assessment for Peak Runoff (DA 2)

Compute peak runoff for pre- and post-developed conditions

Variables		Pre-developed DA to Project Outlet (*Use additional forms if more than 3 DMA)*			Post-developed DA to Project Outlet (*Use additional forms if more than 3 DMA)*		
		DMA A	DMA B	DMA C	DMA A	DMA B	DMA C
1 Rainfall Intensity for storm duration equal to time of concentration *I_{peak} = 10^(LOG Form 4.2-1 Item 4 - 0.6 LOG Form 4.2-4 Item 5 /60)*		1.137			1.676		
2 Drainage Area of each DMA (Acres) *For DMA with outlet at project site outlet, include upstream DMA (Using example schematic in Form 3-1, DMA A will include drainage from DMA C)*		0.28			0.28		
3 Ratio of pervious area to total area *For DMA with outlet at project site outlet, include upstream DMA (Using example schematic in Form 3-1, DMA A will include drainage from DMA C)*		1			0.20		
4 Pervious area infiltration rate (in/hr) *Use pervious area CN and antecedent moisture condition with Appendix C-3 of the TGD for WQMP*		0.68			0.75		
5 Maximum loss rate (in/hr) *F_m = Item 3 * Item 4* *Use area-weighted F_m from DMA with outlet at project site outlet, include upstream DMA (Using example schematic in Form 3-1, DMA A will include drainage from DMA C)*		0.68			0.15		
6 Peak Flow from DMA (cfs) *Q_p =Item 2 * 0.9 * (Item 1 - Item 5)*		0.115			0.385		
7 Time of concentration adjustment factor for other DMA to site discharge point *Form 4.2-4 Item 12 DMA / Other DMA upstream of site discharge point (If ratio is greater than 1.0, then use maximum value of 1.0)*	DMA A	*n/a*			*n/a*		
	DMA B		*n/a*			*n/a*	
	DMA C			*n/a*			*n/a*

8 Pre-developed Q_p at T_c for DMA A: 0.12

*Q_p = Item 6_{DMAA} + [Item 6_{DMAB} * (Item 1_{DMAA} - Item 5_{DMAB})/(Item 1_{DMAB} - Item 5_{DMAB})* Item $7_{DMAA/2}$] + [Item 6_{DMAC} * (Item 1_{DMAA} - Item 5_{DMAC})/(Item 1_{DMAC} - Item 5_{DMAC})* Item $7_{DMAA/3}$]*

9 Pre-developed Q_p at T_c for DMA B:

*Q_p = Item 6_{DMAB} + [Item 6_{DMAA} * (Item 1_{DMAB} - Item 5_{DMAA})/(Item 1_{DMAA} - Item 5_{DMAA})* Item $7_{DMAB/1}$] + [Item 6_{DMAC} * (Item 1_{DMAB} - Item 5_{DMAC})/(Item 1_{DMAC} - Item 5_{DMAC})* Item $7_{DMAB/3}$]*

10 Pre-developed Q_p at T_c for DMA C:

*Q_p = Item 6_{DMAC} + [Item 6_{DMAA} * (Item 1_{DMAC} - Item 5_{DMAA})/(Item 1_{DMAA} - Item 5_{DMAA})* Item $7_{DMAC/1}$] + [Item 6_{DMAB} * (Item 1_{DMAC} - Item 5_{DMAB})/(Item 1_{DMAB} - Item 5_{DMAB})* Item $7_{DMAC/2}$]*

10 Peak runoff from pre-developed condition confluence analysis (cfs): 0.12 *Maximum of Item 8, 9, and 10 (including additional forms as needed)*

11 Post-developed Q_p at T_c for DMA A: 0.385

Same as Item 8 for post-developed values

12 Post-developed Q_p at T_c for DMA B:

Same as Item 9 for post-developed values

13 Post-developed Q_p at T_c for DMA C:

Same as Item 10 for post-developed values

14 Peak runoff from post-developed condition confluence analysis (cfs): 0.385 *Maximum of Item 11, 12, and 13 (including additional forms as needed)*

15 Peak runoff reduction needed to meet HCOC Requirement (cfs): 0.246 Q_{p-HCOC} = *(Item 14 * 0.95) – Item 10*

4.3 Project Conformance Analysis

Complete the following forms for each project site DA to document that the proposed LID BMPs conform to the project DCV developed to meet performance criteria specified in the MS4 Permit (WQMP Template Section 4.2). For the LID DCV, the forms are ordered according to hierarchy of BMP selection as required by the MS4 Permit (see Section 5.3.1 in the TGD for WQMP). The forms compute the following for on-site LID BMP:

- Site Design and Hydrologic Source Controls (Form 4.3-2)
- Retention and Infiltration (Form 4.3-3)
- Harvested and Use (Form 4.3-4) or
- Biotreatment (Form 4.3-5).

At the end of each form, additional fields facilitate the determination of the extent of mitigation provided by the specific BMP category, allowing for use of the next category of BMP in the hierarchy, if necessary.

The first step in the analysis, using Section 5.3.2.1 of the TGD for WQMP, is to complete Forms 4.3-1 and 4.3-3) to determine if retention and infiltration BMPs are infeasible for the project. For each feasibility criterion in Form 4.3-1, if the answer is "Yes," provide all study findings that includes relevant calculations, maps, data sources, etc. used to make the determination of infeasibility.

Next, complete Forms 4.3-2 and 4.3-4 to determine the feasibility of applicable HSC and harvest and use BMPs, and, if their implementation is feasible, the extent of mitigation of the DCV.

If no site constraints exist that would limit the type of BMP to be implemented in a DA, evaluate the use of combinations of LID BMPs, including all applicable HSC BMPs to maximize on-site retention of the DCV. If no combination of BMP can mitigate the entire DCV, implement the single BMP type, or combination of BMP types, that maximizes on-site retention of the DCV within the minimum effective area.

If the combination of LID HSC, retention and infiltration, and harvest and use BMPs are unable to mitigate the entire DCV, then biotreatment BMPs may be implemented by the project proponent. If biotreatment BMPs are used, then they must be sized to provide sufficient capacity for effective treatment of the remainder of the volume-based performance criteria that cannot be achieved with LID BMPs (TGD for WQMP Section 5.4.4.2). **Under no circumstances shall any portion of the DCV be released from the site without effective mitigation and/or treatment**.

Form 4.3-1 Infiltration BMP Feasibility (DA 1)

Feasibility Criterion – Complete evaluation for each DA on the Project Site

[1] Would infiltration BMP pose significant risk for groundwater related concerns? Yes ☐ No ☒
Refer to Section 5.3.2.1 of the TGD for WQMP

If Yes, Provide basis: (attach)

[2] Would installation of infiltration BMP significantly increase the risk of geotechnical hazards? Yes ☐ No ☒
(Yes, if the answer to any of the following questions is yes, as established by a geotechnical expert):

- The location is less than 50 feet away from slopes steeper than 15 percent
- The location is less than eight feet from building foundations or an alternative setback.
- A study certified by a geotechnical professional or an available watershed study determines that stormwater infiltration would result in significantly increased risks of geotechnical hazards.

If Yes, Provide basis: (attach)

[3] Would infiltration of runoff on a Project site violate downstream water rights? Yes ☐ No ☒

If Yes, Provide basis: (attach)

[4] Is proposed infiltration facility located on hydrologic soil group (HSG) D soils or does the site geotechnical investigation indicate presence of soil characteristics, which support categorization as D soils? Yes ☐ No ☒

If Yes, Provide basis: (attach)

[5] Is the design infiltration rate, after accounting for safety factor of 2.0, below proposed facility less than 0.3 in/hr (accounting for soil amendments)? Yes ☐ No ☒

If Yes, Provide basis: (attach)

[6] Would on-site infiltration or reduction of runoff over pre-developed conditions be partially or fully inconsistent with watershed management strategies as defined in the WAP, or impair beneficial uses? Yes ☐ No ☒
See Section 3.5 of the TGD for WQMP and WAP

If Yes, Provide basis: (attach)

[7] Any answer from Item 1 through Item 3 is "Yes": Yes ☐ No ☒
If yes, infiltration of any volume is not feasible onsite. Proceed to Form 4.3-4, Harvest and Use BMP. If no, then proceed to Item 8 below.

[8] Any answer from Item 4 through Item 6 is "Yes": Yes ☐ No ☒
If yes, infiltration is permissible but is not required to be considered. Proceed to Form 4.3-2, Hydrologic Source Control BMP.
If no, then proceed to Item 9, below.

[9] All answers to Item 1 through Item 6 are "No":
Infiltration of the full DCV is potentially feasible, LID infiltration BMP must be designed to infiltrate the full DCV to the MEP.
Proceed to Form 4.3-2, Hydrologic Source Control BMP.

Form 4.3-1 Infiltration BMP Feasibility (DA 2)

Feasibility Criterion – Complete evaluation for each DA on the Project Site

[1] Would infiltration BMP pose significant risk for groundwater related concerns? Yes ☐ No ☒
Refer to Section 5.3.2.1 of the TGD for WQMP

If Yes, Provide basis: (attach)

[2] Would installation of infiltration BMP significantly increase the risk of geotechnical hazards? Yes ☐ No ☒
(Yes, if the answer to any of the following questions is yes, as established by a geotechnical expert):

- The location is less than 50 feet away from slopes steeper than 15 percent
- The location is less than eight feet from building foundations or an alternative setback.
- A study certified by a geotechnical professional or an available watershed study determines that stormwater infiltration would result in significantly increased risks of geotechnical hazards.

If Yes, Provide basis: (attach)

[3] Would infiltration of runoff on a Project site violate downstream water rights? Yes ☐ No ☒

If Yes, Provide basis: (attach)

[4] Is proposed infiltration facility located on hydrologic soil group (HSG) D soils or does the site geotechnical investigation indicate presence of soil characteristics, which support categorization as D soils? Yes ☐ No ☒

If Yes, Provide basis: (attach)

[5] Is the design infiltration rate, after accounting for safety factor of 2.0, below proposed facility less than 0.3 in/hr (accounting for soil amendments)? Yes ☐ No ☒

If Yes, Provide basis: (attach)

[6] Would on-site infiltration or reduction of runoff over pre-developed conditions be partially or fully inconsistent with watershed management strategies as defined in the WAP, or impair beneficial uses? Yes ☐ No ☒
See Section 3.5 of the TGD for WQMP and WAP

If Yes, Provide basis: (attach)

[7] Any answer from Item 1 through Item 3 is “Yes”: Yes ☐ No ☒
If yes, infiltration of any volume is not feasible onsite. Proceed to Form 4.3-4, Harvest and Use BMP. If no, then proceed to Item 8 below.

[8] Any answer from Item 4 through Item 6 is “Yes”: Yes ☐ No ☒
If yes, infiltration is permissible but is not required to be considered. Proceed to Form 4.3-2, Hydrologic Source Control BMP.
If no, then proceed to Item 9, below.

[9] All answers to Item 1 through Item 6 are “No”:
Infiltration of the full DCV is potentially feasible, LID infiltration BMP must be designed to infiltrate the full DCV to the MEP.
Proceed to Form 4.3-2, Hydrologic Source Control BMP.

4.3.1 Site Design Hydrologic Source Control BMP

Section XI.E. of the Permit emphasizes the use of LID preventative measures; and the use of LID HSC BMPs reduces the portion of the DCV that must be addressed in downstream BMPs. Therefore, all applicable HSC shall be provided except where they are mutually exclusive with each other, or with other BMPs. Mutual exclusivity may result from overlapping BMP footprints such that either would be potentially feasible by itself, but both could not be implemented. Please note that while there are no numeric standards regarding the use of HSC, if a project cannot feasibly meet BMP sizing requirements or cannot fully address HCOCs, feasibility of all applicable HSC must be part of demonstrating that the BMP system has been designed to retain the maximum feasible portion of the DCV. Complete Form 4.3-2 to identify and calculate estimated retention volume from implementing site design HSC BMP. Refer to Section 5.4.1 in the TGD for more detailed guidance.

Form 4.3-2 Site Design Hydrologic Source Control BMPs (DA 1)

1 Implementation of Impervious Area Dispersion BMP (i.e. routing runoff from impervious to pervious areas), excluding impervious areas planned for routing to on-lot infiltration BMP: Yes ☐ No ☒ *If yes, complete Items 2-5; If no, proceed to Item 6*	DA DMA BMP Type	DA DMA BMP Type	DA DMA BMP Type *(Use additional forms for more BMPs)*
2 Total impervious area draining to pervious area (ft^2)			
3 Ratio of pervious area receiving runoff to impervious area			
4 Retention volume achieved from impervious area dispersion (ft^3) *V = Item2 * Item 3 * (0.5/12), assuming retention of 0.5 inches of runoff*			
5 Sum of retention volume achieved from impervious area dispersion (ft^3): 0 $V_{retention}$ *=Sum of Item 4 for all BMPs*			
6 Implementation of Localized On-lot Infiltration BMPs (e.g. on-lot rain gardens): Yes ☐ No ☒ *If yes, complete Items 7-13 for aggregate of all on-lot infiltration BMP in each DA; If no, proceed to Item 14*	DA DMA BMP Type	DA DMA BMP Type	DA DMA BMP Type *(Use additional forms for more BMPs)*
7 Ponding surface area (ft^2)			
8 Ponding depth (ft)			
9 Surface area of amended soil/gravel (ft^2)			
10 Average depth of amended soil/gravel (ft)			
11 Average porosity of amended soil/gravel			
12 Retention volume achieved from on-lot infiltration (ft^3) $V_{retention}$ *= (Item 7 *Item 8) + (Item 9 * Item 10 * Item 11)*			
13 Runoff volume retention from on-lot infiltration (ft^3): 0 $V_{retention}$ *=Sum of Item 12 for all BMPs*			

Form 4.3-2 cont. Site Design Hydrologic Source Control BMPs (DA 1)

14 Implementation of evapotranspiration BMP (green, brown, or blue roofs): Yes ☐ No ☒ *If yes, complete Items 15-20. If no, proceed to Item 21*	DA DMA BMP Type	DA DMA BMP Type	DA DMA BMP Type *(Use additional forms for more BMPs)*
15 Rooftop area planned for ET BMP (ft^2)			
16 Average wet season ET demand (in/day) *Use local values, typical ~ 0.1*			
17 Daily ET demand (ft^3/day) *Item 15 * (Item 16 / 12)*			
18 Drawdown time (hrs) *Copy Item 6 in Form 4.2-1*			
19 Retention Volume (ft^3) $V_{retention}$ *= Item 17 * (Item 18 / 24)*			
20 Runoff volume retention from evapotranspiration BMPs (ft^3): 0 $V_{retention}$ *=Sum of Item 19 for all BMPs*			
21 Implementation of Street Trees: Yes ☐ No ☒ *If yes, complete Items 22-25. If no, proceed to Item 26*	DA DMA BMP Type	DA DMA BMP Type	DA DMA BMP Type *(Use additional forms for more BMPs)*
22 Number of Street Trees			
23 Average canopy cover over impervious area (ft^2)			
24 Runoff volume retention from street trees (ft^3) $V_{retention}$ *= Item 22 * Item 23 * (0.05/12) assume runoff retention of 0.05 inches*			
25 Runoff volume retention from street tree BMPs (ft^3): 0 $V_{retention}$ *= Sum of Item 24 for all BMPs*			
26 Implementation of residential rain barrel/cisterns: Yes ☐ No ☒ *If yes, complete Items 27-29; If no, proceed to Item 30*	DA DMA BMP Type	DA DMA BMP Type	DA DMA BMP Type *(Use additional forms for more BMPs)*
27 Number of rain barrels/cisterns			
28 Runoff volume retention from rain barrels/cisterns (ft^3) $V_{retention}$ *= Item 27 * 3*			
29 Runoff volume retention from residential rain barrels/Cisterns (ft3): 0 $V_{retention}$ *=Sum of Item 28 for all BMPs*			
30 Total Retention Volume from Site Design Hydrologic Source Control BMPs: 0 *Sum of Items 5, 13, 20, 25 and 29*			

Form 4.3-2 Site Design Hydrologic Source Control BMPs (DA 2)

1 Implementation of Impervious Area Dispersion BMP (i.e. routing runoff from impervious to pervious areas), excluding impervious areas planned for routing to on-lot infiltration BMP: Yes ☐ No ☒ *If yes, complete Items 2-5; If no, proceed to Item 6*	DA DMA BMP Type	DA DMA BMP Type	DA DMA BMP Type *(Use additional forms for more BMPs)*
2 Total impervious area draining to pervious area (ft^2)			
3 Ratio of pervious area receiving runoff to impervious area			
4 Retention volume achieved from impervious area dispersion (ft^3) *V = Item2 * Item 3 * (0.5/12), assuming retention of 0.5 inches of runoff*			
5 Sum of retention volume achieved from impervious area dispersion (ft^3): 0 $V_{retention}$ *=Sum of Item 4 for all BMPs*			
6 Implementation of Localized On-lot Infiltration BMPs (e.g. on-lot rain gardens): Yes ☐ No ☒ *If yes, complete Items 7-13 for aggregate of all on-lot infiltration BMP in each DA; If no, proceed to Item 14*	DA DMA BMP Type	DA DMA BMP Type	DA DMA BMP Type *(Use additional forms for more BMPs)*
7 Ponding surface area (ft^2)			
8 Ponding depth (ft)			
9 Surface area of amended soil/gravel (ft^2)			
10 Average depth of amended soil/gravel (ft)			
11 Average porosity of amended soil/gravel			
12 Retention volume achieved from on-lot infiltration (ft^3) $V_{retention}$ *= (Item 7 *Item 8) + (Item 9 * Item 10 * Item 11)*			
13 Runoff volume retention from on-lot infiltration (ft^3): 0 $V_{retention}$ *=Sum of Item 12 for all BMPs*			

Form 4.3-2 cont. Site Design Hydrologic Source Control BMPs (DA 2)

14 Implementation of evapotranspiration BMP (green, brown, or blue roofs): Yes ☐ No ☒ *If yes, complete Items 15-20. If no, proceed to Item 21*	DA DMA BMP Type	DA DMA BMP Type	DA DMA BMP Type *(Use additional forms for more BMPs)*
15 Rooftop area planned for ET BMP (ft^2)			
16 Average wet season ET demand (in/day) *Use local values, typical ~ 0.1*			
17 Daily ET demand (ft^3/day) Item 15 * (Item 16 / 12)			
18 Drawdown time (hrs) *Copy Item 6 in Form 4.2-1*			
19 Retention Volume (ft^3) $V_{retention}$ = Item 17 * (Item 18 / 24)			

20 Runoff volume retention from evapotranspiration BMPs (ft^3): 0 $V_{retention}$ =Sum of Item 19 for all BMPs

21 Implementation of Street Trees: Yes ☐ No ☒ *If yes, complete Items 22-25. If no, proceed to Item 26*	DA DMA BMP Type	DA DMA BMP Type	DA DMA BMP Type *(Use additional forms for more BMPs)*
22 Number of Street Trees			
23 Average canopy cover over impervious area (ft^2)			
24 Runoff volume retention from street trees (ft^3) $V_{retention}$ = Item 22 * Item 23 * (0.05/12) assume runoff retention of 0.05 inches			

25 Runoff volume retention from street tree BMPs (ft^3): 0 $V_{retention}$ = Sum of Item 24 for all BMPs

26 Implementation of residential rain barrel/cisterns: Yes ☐ No ☒ *If yes, complete Items 27-29; If no, proceed to Item 30*	DA DMA BMP Type	DA DMA BMP Type	DA DMA BMP Type *(Use additional forms for more BMPs)*
27 Number of rain barrels/cisterns			
28 Runoff volume retention from rain barrels/cisterns (ft^3) $V_{retention}$ = Item 27 * 3			

29 Runoff volume retention from residential rain barrels/Cisterns (ft3): 0 $V_{retention}$ =Sum of Item 28 for all BMPs

30 Total Retention Volume from Site Design Hydrologic Source Control BMPs: 0 *Sum of Items 5, 13, 20, 25 and 29*

4.3.2 Infiltration BMPs

Use Form 4.3-3 to compute on-site retention of runoff from proposed retention and infiltration BMPs. Volume retention estimates are sensitive to the percolation rate used, which determines the amount of runoff that can be infiltrated within the specified drawdown time. The infiltration safety factor reduces field measured percolation to account for potential inaccuracy associated with field measurements, declining BMP performance over time, and compaction during construction. Appendix D of the TGD for WQMP provides guidance on estimating an appropriate safety factor to use in Form 4.3-3.

If site constraints limit the use of BMPs to a single type and implementation of retention and infiltration BMPs mitigate no more than 40% of the DCV, then they are considered infeasible and the Project Proponent may evaluate the effectiveness of BMPs lower in the LID hierarchy of use (Section 5.5.1 of the TGD for WQMP)

If implementation of infiltrations BMPs is feasible as determined using Form 4.3-1, then LID infiltration BMPs shall be implemented to the MEP (section 4.1 of the TGD for WQMP).

.

Form 4.3-3 Infiltration LID BMP - including underground BMPs (DA 1)

1 Remaining LID DCV not met by site design HSC BMP (ft^3): 27,084 *V_{unmet} = Form 4.2-1 Item 7 - Form 4.3-2 Item 30*

BMP Type *Use columns to the right to compute runoff volume retention from proposed infiltration BMP (select BMP from Table 5-4 in TGD for WQMP) - Use additional forms for more BMPs*	DA 1 DMA BMP Type Underground Infiltration	DA DMA BMP Type	DA DMA BMP Type
2 Infiltration rate of underlying soils (in/hr) *See Section 5.4.2 and Appendix D of the TGD for WQMP for minimum requirements for assessment methods*	7.98		
3 Infiltration safety factor *See TGD Section 5.4.2 and Appendix D*	2		
4 Design percolation rate (in/hr) *P_{design} = Item 2 / Item 3*	3.99		
5 Ponded water drawdown time (hr) *Copy Item 6 in Form 4.2-1*	48		
6 Maximum ponding depth (ft) *BMP specific, see Table 5-4 of the TGD for WQMP for BMP design details*	N/A		
7 Ponding Depth (ft) *d_{BMP} = Minimum of (1/12*Item 4*Item 5) or Item 6*	N/A		
8 Infiltrating surface area, SA_{BMP} (ft^2) *the lesser of the area needed for infiltration of full DCV or minimum space requirements from Table 5.7 of the TGD for WQMP*	3,660		
9 Amended soil depth, d_{media} (ft) *Only included in certain BMP types, see Table 5-4 in the TGD for WQMP for reference to BMP design details*	N/A		
10 Amended soil porosity	N/A		
11 Gravel depth, d_{media} (ft) *Only included in certain BMP types, see Table 5-4 of the TGD for WQMP for BMP design details*	N/A		
12 Gravel porosity	0.35		
13 Duration of storm as basin is filling (hrs) *Typical ~ 3hrs*	3		
14 Above Ground Retention Volume (ft^3) *$V_{retention}$ = Item 8 * [Item7 + (Item 9 * Item 10) + (Item 11 * Item 12) + (Item 13 * (Item 4 / 12))]*	N/A		
15 Underground Retention Volume (ft^3) ***Formula from Table 5-4 of the TGD: $V_{ret} = (P_{design} / 12 * SA_{inf} * T_{fill}) + (SA_{reservoir} * d_{reservoir} * n_{aggregate})$***	27,148 (See WQMP Site Plan for calculations)		

16 Total Retention Volume from LID Infiltration BMPs: 27,148 (ft^3) *(Sum of Items 14 and 15 for all infiltration BMP included in plan)*

17 Fraction of DCV achieved with infiltration BMP: 100.2% *Retention% = Item 16 / Form 4.2-1 Item 7*

18 Is full LID DCV retained onsite with combination of hydrologic source control and LID retention/infiltration BMPs? Yes ☒ No ☐

If yes, demonstrate conformance using Form 4.3-10; If no, then reduce Item 3, Factor of Safety to 2.0 and increase Item 8, Infiltrating Surface Area, such that the portion of the site area used for retention and infiltration BMPs equals or exceeds the minimum effective area thresholds (Table 5-7 of the TGD for WQMP) for the applicable category of development and repeat all above calculations.

Form 4.3-3 Infiltration LID BMP - including underground BMPs (DA 2)

1 Remaining LID DCV not met by site design HSC BMP (ft^3): 876 *V_{unmet} = Form 4.2-1 Item 7 - Form 4.3-2 Item 30*

BMP Type *Use columns to the right to compute runoff volume retention from proposed infiltration BMP (select BMP from Table 5-4 in TGD for WQMP) - Use additional forms for more BMPs*	DA 2 DMA BMP Type Underground Infiltration	DA DMA BMP Type	DA DMA BMP Type *(Use additional forms for more BMPs)*
2 Infiltration rate of underlying soils (in/hr) *See Section 5.4.2 and Appendix D of the TGD for WQMP for minimum requirements for assessment methods*	7.98		
3 Infiltration safety factor *See TGD Section 5.4.2 and Appendix D*	2		
4 Design percolation rate (in/hr) *P_{design} = Item 2 / Item 3*	3.99		
5 Ponded water drawdown time (hr) *Copy Item 6 in Form 4.2-1*	48		
6 Maximum ponding depth (ft) *BMP specific, see Table 5-4 of the TGD for WQMP for BMP design details*	N/A		
7 Ponding Depth (ft) *d_{BMP} = Minimum of (1/12*Item 4*Item 5) or Item 6*	N/A		
8 Infiltrating surface area, SA_{BMP} (ft^2) *the lesser of the area needed for infiltration of full DCV or minimum space requirements from Table 5.7 of the TGD for WQMP*	200		
9 Amended soil depth, d_{media} (ft) *Only included in certain BMP types, see Table 5-4 in the TGD for WQMP for reference to BMP design details*	N/A		
10 Amended soil porosity	N/A		
11 Gravel depth, d_{media} (ft) *Only included in certain BMP types, see Table 5-4 of the TGD for WQMP for BMP design details*	N/A		
12 Gravel porosity	0.35		
13 Duration of storm as basin is filling (hrs) *Typical ~ 3hrs*	3		
14 Above Ground Retention Volume (ft^3) *$V_{retention}$ = Item 8 * [Item7 + (Item 9 * Item 10) + (Item 11 * Item 12) + (Item 13 * (Item 4 / 12))]*	N/A		
15 Underground Retention Volume (ft^3) ***Formula from Table 5-4 of the TGD: Vret = (Pdesign / 12 * SAinf * Tfill) + (SAreservoir * dreservoir * naggregate)***	1,484 (See WQMP Site Plan for calculations)		

16 Total Retention Volume from LID Infiltration BMPs: 1,484 (ft^3) *(Sum of Items 14 and 15 for all infiltration BMP included in plan)*

17 Fraction of DCV achieved with infiltration BMP: 169% *Retention% = Item 16 / Form 4.2-1 Item 7*

18 Is full LID DCV retained onsite with combination of hydrologic source control and LID retention/infiltration BMPs? Yes ☒ No ☐

If yes, demonstrate conformance using Form 4.3-10; If no, then reduce Item 3, Factor of Safety to 2.0 and increase Item 8, Infiltrating Surface Area, such that the portion of the site area used for retention and infiltration BMPs equals or exceeds the minimum effective area thresholds (Table 5-7 of the TGD for WQMP) for the applicable category of development and repeat all above calculations.

4.3.3 Harvest and Use BMP

Harvest and use BMP may be considered if the full LID DCV cannot be met by maximizing infiltration BMPs. Use Form 4.3-4 to compute on-site retention of runoff from proposed harvest and use BMPs.

Volume retention estimates for harvest and use BMPs are sensitive to the on-site demand for captured stormwater. Since irrigation water demand is low in the wet season, when most rainfall events occur in San Bernardino County, the volume of water that can be used within a specified drawdown period is relatively low. The bottom portion of Form 4.3-4 facilitates the necessary computations to show infeasibility if a minimum incremental benefit of 40 percent of the LID DCV would not be achievable with MEP implementation of on-site harvest and use of stormwater (Section 5.5.4 of the TGD for WQMP).

Form 4.3-4 Harvest and Use BMPs (DA 1)

1 Remaining LID DCV not met by site design HSC or infiltration BMP (ft^3): 0
V_{unmet} = Form 4.2-1 Item 7 - Form 4.3-2 Item 30 – Form 4.3-3 Item 16

BMP Type(s) *Compute runoff volume retention from proposed harvest and use BMP (Select BMPs from Table 5-4 of the TGD for WQMP) - Use additional forms for more BMPs*	DA DMA BMP Type	DA DMA BMP Type	DA DMA BMP Type *(Use additional forms for more BMPs)*
2 Describe cistern or runoff detention facility			
3 Storage volume for proposed detention type (ft^3) *Volume of cistern*			
4 Landscaped area planned for use of harvested stormwater (ft^2)			
5 Average wet season daily irrigation demand (in/day) Use local values, typical ~ 0.1 in/day			
6 Daily water demand (ft^3/day) *Item 4 * (Item 5 / 12)*			
7 Drawdown time (hrs) *Copy Item 6 from Form 4.2-1*			
8 Retention Volume (ft^3) *$V_{retention}$ = Minimum of (Item 3) or (Item 6 * (Item 7 / 24))*			

9 Total Retention Volume (ft^3) from Harvest and Use BMP *Sum of Item 8 for all harvest and use BMP included in plan*

10 Is the full DCV retained with a combination of LID HSC, retention and infiltration, and harvest & use BMPs? Yes ☒ No ☐

If yes, demonstrate conformance using Form 4.3-10. If no, then re-evaluate combinations of all LID BMP and optimize their implementation such that the maximum portion of the DCV is retained on-site (using a single BMP type or combination of BMP types). If the full DCV cannot be mitigated after this optimization process, proceed to Section 4.3.4.

Form 4.3-4 Harvest and Use BMPs (DA 2)

1 Remaining LID DCV not met by site design HSC or infiltration BMP (ft^3): 0

V_{unmet} = Form 4.2-1 Item 7 - Form 4.3-2 Item 30 – Form 4.3-3 Item 16

BMP Type(s) *Compute runoff volume retention from proposed harvest and use BMP (Select BMPs from Table 5-4 of the TGD for WQMP) - Use additional forms for more BMPs*	DA DMA BMP Type	DA DMA BMP Type	DA DMA BMP Type *(Use additional forms for more BMPs)*
2 Describe cistern or runoff detention facility			
3 Storage volume for proposed detention type (ft^3) *Volume of cistern*			
4 Landscaped area planned for use of harvested stormwater (ft^2)			
5 Average wet season daily irrigation demand (in/day) Use local values, typical ~ 0.1 in/day			
6 Daily water demand (ft^3/day) *Item 4 * (Item 5 / 12)*			
7 Drawdown time (hrs) *Copy Item 6 from Form 4.2-1*			
8 Retention Volume (ft^3) *$V_{retention}$ = Minimum of (Item 3) or (Item 6 * (Item 7 / 24))*			

9 Total Retention Volume (ft^3) from Harvest and Use BMP *Sum of Item 8 for all harvest and use BMP included in plan*

10 Is the full DCV retained with a combination of LID HSC, retention and infiltration, and harvest & use BMPs? Yes ☒ No ☐

If yes, demonstrate conformance using Form 4.3-10. If no, then re-evaluate combinations of all LID BMP and optimize their implementation such that the maximum portion of the DCV is retained on-site (using a single BMP type or combination of BMP types). If the full DCV cannot be mitigated after this optimization process, proceed to Section 4.3.4.

4.3.4 Biotreatment BMP

Biotreatment BMPs may be considered if the full LID DCV cannot be met by maximizing retention and infiltration, and harvest and use BMPs. A key consideration when using biotreatment BMP is the effectiveness of the proposed BMP in addressing the pollutants of concern for the project (see Table 5-5 of the TGD for WQMP).

Use Form 4.3-5 to summarize the potential for volume based and/or flow based biotreatment options to biotreat the remaining unmet LID DCV w. Biotreatment computations are included as follows:

- Use Form 4.3-6 to compute biotreatment in small volume based biotreatment BMP (e.g. bioretention w/underdrains);
- Use Form 4.3-7 to compute biotreatment in large volume based biotreatment BMP (e.g. constructed wetlands);
- Use Form 4.3-8 to compute sizing criteria for flow-based biotreatment BMP (e.g. bioswales)

Form 4.3-5 Selection and Evaluation of Biotreatment BMP (DA 1)

1 Remaining LID DCV not met by site design HSC, infiltration, or harvest and use BMP for potential biotreatment (ft^3): 0 *Form 4.2-1 Item 7 - Form 4.3-2 Item 30 – Form 4.3-3 Item 16- Form 4.3-4 Item 9*

List pollutants of concern *Copy from Form 2.3-1.*

2 Biotreatment BMP Selected *(Select biotreatment BMP(s) necessary to ensure all pollutants of concern are addressed through Unit Operations and Processes, described in Table 5-5 of the TGD for WQMP)*	Volume-based biotreatment *Use Forms 4.3-6 and 4.3-7 to compute treated volume*	Flow-based biotreatment *Use Form 4.3-8 to compute treated volume*
	☐ Bioretention with underdrain ☐ Planter box with underdrain ☐ Constructed wetlands ☐ Wet extended detention ☐ Dry extended detention	☐ Vegetated swale ☐ Vegetated filter strip ☐ Proprietary biotreatment

3 Volume biotreated in volume based biotreatment BMP (ft^3): 0 *Form 4.3-6 Item 15 + Form 4.3-7 Item 13*

4 Compute remaining LID DCV with implementation of volume based biotreatment BMP (ft^3): *Item 1 – Item 3*

5 Remaining fraction of LID DCV for sizing flow based biotreatment BMP: % *Item 4 / Item 1*

6 Flow-based biotreatment BMP capacity provided (cfs): 0 *Use Figure 5-2 of the TGD for WQMP to determine flow capacity required to provide biotreatment of remaining percentage of unmet LID DCV (Item 5), for the project's precipitation zone (Form 3-1 Item 1)*

7 Metrics for MEP determination:

- Provided a WQMP with the portion of site area used for suite of LID BMP equal to minimum thresholds in Table 5-7 of the TGD for WQMP for the proposed category of development: ☐ *If maximized on-site retention BMPs is feasible for partial capture, then LID BMP implementation must be optimized to retain and infiltrate the maximum portion of the DCV possible within the prescribed minimum effective area. The remaining portion of the DCV shall then be mitigated using biotreatment BMP.*

Form 4.3-5 Selection and Evaluation of Biotreatment BMP (DA 2)

1 Remaining LID DCV not met by site design HSC, infiltration, or harvest and use BMP for potential biotreatment (ft^3): 0 *Form 4.2-1 Item 7 - Form 4.3-2 Item 30 – Form 4.3-3 Item 16- Form 4.3-4 Item 9*

List pollutants of concern *Copy from Form 2.3-1.*

2 Biotreatment BMP Selected

(Select biotreatment BMP(s) necessary to ensure all pollutants of concern are addressed through Unit Operations and Processes, described in Table 5-5 of the TGD for WQMP)

Volume-based biotreatment *Use Forms 4.3-6 and 4.3-7 to compute treated volume*	Flow-based biotreatment *Use Form 4.3-8 to compute treated volume*
☐ Bioretention with underdrain ☐ Planter box with underdrain ☐ Constructed wetlands ☐ Wet extended detention ☐ Dry extended detention	☐ Vegetated swale ☐ Vegetated filter strip ☐ Proprietary biotreatment

3 Volume biotreated in volume based biotreatment BMP (ft^3): 0 *Form 4.3-6 Item 15 + Form 4.3-7 Item 13*

4 Compute remaining LID DCV with implementation of volume based biotreatment BMP (ft^3): *Item 1 – Item 3*

5 Remaining fraction of LID DCV for sizing flow based biotreatment BMP: % *Item 4 / Item 1*

6 Flow-based biotreatment BMP capacity provided (cfs): 0 *Use Figure 5-2 of the TGD for WQMP to determine flow capacity required to provide biotreatment of remaining percentage of unmet LID DCV (Item 5), for the project's precipitation zone (Form 3-1 Item 1)*

7 Metrics for MEP determination:

- Provided a WQMP with the portion of site area used for suite of LID BMP equal to minimum thresholds in Table 5-7 of the TGD for WQMP for the proposed category of development: ☐ *If maximized on-site retention BMPs is feasible for partial capture, then LID BMP implementation must be optimized to retain and infiltrate the maximum portion of the DCV possible within the prescribed minimum effective area. The remaining portion of the DCV shall then be mitigated using biotreatment BMP.*

Form 4.3-6 Volume Based Biotreatment (DA 1 & DA 2) – Bioretention and Planter Boxes with Underdrains

Biotreatment BMP Type N/A *(Bioretention w/underdrain, planter box w/underdrain, other comparable BMP)*	DA DMA BMP Type	DA DMA BMP Type	DA DMA BMP Type *(Use additional forms for more BMPs)*
1 Pollutants addressed with BMP *List all pollutant of concern that will be effectively reduced through specific Unit Operations and Processes described in Table 5-5 of the TGD for WQMP*			
2 Amended soil infiltration rate *Typical ~ 5.0*			
3 Amended soil infiltration safety factor *Typical ~ 2.0*			
4 Amended soil design percolation rate (in/hr) P_{design} *= Item 2 / Item 3*			
5 Ponded water drawdown time (hr) *Copy Item 6 from Form 4.2-1*			
6 Maximum ponding depth (ft) *see Table 5-6 of the TGD for WQMP for reference to BMP design details*			
7 Ponding Depth (ft) d_{BMP} *= Minimum of (1/12 * Item 4 * Item 5) or Item 6*			
8 Amended soil surface area (ft^2)			
9 Amended soil depth (ft) *see Table 5-6 of the TGD for WQMP for reference to BMP design details*			
10 Amended soil porosity, *n*			
11 Gravel depth (ft) *see Table 5-6 of the TGD for WQMP for reference to BMP design details*			
12 Gravel porosity, *n*			
13 Duration of storm as basin is filling (hrs) *Typical ~ 3hrs*			
14 Biotreated Volume (ft^3) $V_{biotreated}$ *= Item 8 * [(Item 7/2) + (Item 9 * Item 10) +(Item 11 * Item 12) + (Item 13 * (Item 4 / 12))]*			
15 Total biotreated volume from bioretention and/or planter box with underdrains BMP: *Sum of Item 14 for all volume-based BMPs included in this form*			

Form 4.3-7 Volume Based Biotreatment (DA 1 & DA 2) – Constructed Wetlands and Extended Detention

Biotreatment BMP Type N/A *Constructed wetlands, extended wet detention, extended dry detention, or other comparable proprietary BMP. If BMP includes multiple modules (e.g. forebay and main basin), provide separate estimates for storage and pollutants treated in each module.*	DA DMA BMP Type		DA DMA BMP Type *(Use additional forms for more BMPs)*	
	Forebay	Basin	Forebay	Basin
1 Pollutants addressed with BMP forebay and basin *List all pollutant of concern that will be effectively reduced through specific Unit Operations and Processes described in Table 5-5 of the TGD for WQMP*				
2 Bottom width (ft)				
3 Bottom length (ft)				
4 Bottom area (ft^2) A_{bottom} *= Item 2 * Item 3*				
5 Side slope (ft/ft)				
6 Depth of storage (ft)				
7 Water surface area (ft^2) $A_{surface}$ *=(Item 2 + (2 * Item 5 * Item 6)) * (Item 3 + (2 * Item 5 * Item 6))*				
8 Storage volume (ft^3) *For BMP with a forebay, ensure fraction of total storage is within ranges specified in BMP specific fact sheets, see Table 5-6 of the TGD for WQMP for reference to BMP design details* V =*Item 6 / 3 * [Item 4 + Item 7 + (Item 4 * Item 7)^0.5]*				
9 Drawdown Time (hrs) *Copy Item 6 from Form 2.1*				
10 Outflow rate (cfs) Q_{BMP} *= (Item* $8_{forebay}$ *+ Item* 8_{basin}*) / (Item 9 * 3600)*				
11 Duration of design storm event (hrs)				
12 Biotreated Volume (ft^3) $V_{biotreated}$ *= (Item* $8_{forebay}$ *+ Item* 8_{basin}*) +(Item 10 * Item 11 * 3600)*				
13 Total biotreated volume from constructed wetlands, extended dry detention, or extended wet detention : *(Sum of Item 12 for all BMP included in plan)*				

Form 4.3-8 Flow Based Biotreatment (DA 1 & DA 2)

Biotreatment BMP Type N/A *Vegetated swale, vegetated filter strip, or other comparable proprietary BMP*	DA DMA BMP Type	DA DMA BMP Type	DA DMA BMP Type *(Use additional forms for more BMPs)*
1 Pollutants addressed with BMP *List all pollutant of concern that will be effectively reduced through specific Unit Operations and Processes described in TGD Table 5-5*			
2 Flow depth for water quality treatment (ft) *BMP specific, see Table 5-6 of the TGD for WQMP for reference to BMP design details*			
3 Bed slope (ft/ft) *BMP specific, see Table 5-6 of the TGD for WQMP for reference to BMP design details*			
4 Manning's roughness coefficient			
5 Bottom width (ft) *b_w = (Form 4.3-5 Item 6 * Item 4) / (1.49 * Item $2^{\wedge 1.67}$ * Item $3^{\wedge 0.5}$)*			
6 Side Slope (ft/ft) *BMP specific, see Table 5-6 of the TGD for WQMP for reference to BMP design details*			
7 Cross sectional area (ft^2) *A = (Item 5 * Item 2) + (Item 6 * Item $2^{\wedge 2}$)*			
8 Water quality flow velocity (ft/sec) *V = Form 4.3-5 Item 6 / Item 7*			
9 Hydraulic residence time (min) *Pollutant specific, see Table 5-6 of the TGD for WQMP for reference to BMP design details*			
10 Length of flow based BMP (ft) *L = Item 8 * Item 9 * 60*			
11 Water surface area at water quality flow depth (ft^2) *SA_{top} = (Item 5 + (2 * Item 2 * Item 6)) * Item 10*			

4.3.5 Conformance Summary

Complete Form 4.3-9 to demonstrate how on-site LID DCV is met with proposed site design hydrologic source control, infiltration, harvest and use, and/or biotreatment BMP. The bottom line of the form is used to describe the basis for infeasibility determination for on-site LID BMP to achieve full LID DCV, and provides methods for computing remaining volume to be addressed in an alternative compliance plan. If the project has more than one outlet, then complete additional versions of this form for each outlet.

Form 4.3-9 Conformance Summary and Alternative Compliance Volume Estimate (DA 1)

1 Total LID DCV for the Project DA-1 (ft^3): 27,084 *Copy Item 7 in Form 4.2-1*

2 On-site retention with site design hydrologic source control LID BMP (ft^3): 0 *Copy Item 30 in Form 4.3-2*

3 On-site retention with LID infiltration BMP (ft^3): 27,148 *Copy Item 16 in Form 4.3-3*

4 On-site retention with LID harvest and use BMP (ft^3): 0 *Copy Item 9 in Form 4.3-4*

5 On-site biotreatment with volume based biotreatment BMP (ft^3): 0 *Copy Item 3 in Form 4.3-5*

6 Flow capacity provided by flow based biotreatment BMP (cfs): 0 *Copy Item 6 in Form 4.3-5*

7 LID BMP performance criteria are achieved if answer to any of the following is "Yes":

- Full retention of LID DCV with site design HSC, infiltration, or harvest and use BMP: Yes ☒ No ☐
  If yes, sum of Items 2, 3, and 4 is greater than Item 1
- Combination of on-site retention BMPs for a portion of the LID DCV and volume-based biotreatment BMP that address all pollutants of concern for the remaining LID DCV: Yes ☐ No ☒
  If yes, a) sum of Items 2, 3, 4, and 5 is greater than Item 1, and Items 2, 3 and 4 are maximized; or b) Item 6 is greater than Form 4.3--5 Item 6 and Items 2, 3 and 4 are maximized
- On-site retention and infiltration is determined to be infeasible and biotreatment BMP provide biotreatment for all pollutants of concern for full LID DCV: Yes ☐ No ☒
  If yes, Form 4.3-1 Items 7 and 8 were both checked yes

8 If the LID DCV is not achieved by any of these means, then the project may be allowed to develop an alternative compliance plan. Check box that describes the scenario which caused the need for alternative compliance:

- Combination of HSC, retention and infiltration, harvest and use, and biotreatment BMPs provide less than full LID DCV capture: ☐
  Checked yes for Form 4.3-5 Item 7, Item 6 is zero, and sum of Items 2, 3, 4, and 5 is less than Item 1. If so, apply water quality credits and calculate volume for alternative compliance, V_{alt} *= (Item 1 – Item 2 – Item 3 – Item 4 – Item 5) * (100 - Form 2.4-1 Item 2)%*
- An approved Watershed Action Plan (WAP) demonstrates that water quality and hydrologic impacts of urbanization are more effective when managed in at an off-site facility: ☐
  Attach appropriate WAP section, including technical documentation, showing effectiveness comparisons for the project site and regional watershed

Form 4.3-9 Conformance Summary and Alternative Compliance Volume Estimate (DA 2)

1 Total LID DCV for the Project DA-1 (ft^3): 876 *Copy Item 7 in Form 4.2-1*

2 On-site retention with site design hydrologic source control LID BMP (ft^3): 0 *Copy Item 30 in Form 4.3-2*

3 On-site retention with LID infiltration BMP (ft^3): 1,484 *Copy Item 16 in Form 4.3-3*

4 On-site retention with LID harvest and use BMP (ft^3): 0 *Copy Item 9 in Form 4.3-4*

5 On-site biotreatment with volume based biotreatment BMP (ft^3): 0 *Copy Item 3 in Form 4.3-5*

6 Flow capacity provided by flow based biotreatment BMP (cfs): 0 *Copy Item 6 in Form 4.3-5*

7 LID BMP performance criteria are achieved if answer to any of the following is "Yes":

- Full retention of LID DCV with site design HSC, infiltration, or harvest and use BMP: Yes ☒ No ☐
  If yes, sum of Items 2, 3, and 4 is greater than Item 1
- Combination of on-site retention BMPs for a portion of the LID DCV and volume-based biotreatment BMP that address all pollutants of concern for the remaining LID DCV: Yes ☐ No ☒
  If yes, a) sum of Items 2, 3, 4, and 5 is greater than Item 1, and Items 2, 3 and 4 are maximized; or b) Item 6 is greater than Form 4.3--5 Item 6 and Items 2, 3 and 4 are maximized
- On-site retention and infiltration is determined to be infeasible and biotreatment BMP provide biotreatment for all pollutants of concern for full LID DCV: Yes ☐ No ☒
  If yes, Form 4.3-1 Items 7 and 8 were both checked yes

8 If the LID DCV is not achieved by any of these means, then the project may be allowed to develop an alternative compliance plan. Check box that describes the scenario which caused the need for alternative compliance:

- Combination of HSC, retention and infiltration, harvest and use, and biotreatment BMPs provide less than full LID DCV capture: ☐
  Checked yes for Form 4.3-5 Item 7, Item 6 is zero, and sum of Items 2, 3, 4, and 5 is less than Item 1. If so, apply water quality credits and calculate volume for alternative compliance, V_{alt} *= (Item 1 – Item 2 – Item 3 – Item 4 – Item 5) * (100 - Form 2.4-1 Item 2)%*
- An approved Watershed Action Plan (WAP) demonstrates that water quality and hydrologic impacts of urbanization are more effective when managed in at an off-site facility: ☐
  Attach appropriate WAP section, including technical documentation, showing effectiveness comparisons for the project site and regional watershed

4.3.6 Hydromodification Control BMP

Use Form 4.3-10 to compute the remaining runoff volume retention, after LID BMP are implemented, needed to address HCOC, and the increase in time of concentration and decrease in peak runoff necessary to meet targets for protection of waterbodies with a potential HCOC. Describe hydromodification control BMP that address HCOC, which may include off-site BMP and/or in-stream controls. Section 5.6 of the TGD for WQMP provides additional details on selection and evaluation of hydromodification control BMP.

Form 4.3-10 Hydromodification Control BMPs (DA 1)

1 Volume reduction needed for HCOC performance criteria (ft^3): 24,098
*(Form 4.2-2 Item 4 * 0.95) – Form 4.2-2 Item 1*

2 On-site retention with site design hydrologic source control, infiltration, and harvest and use LID BMP (ft^3): 27,148 *Sum of Form 4.3-9 Items 2, 3, and 4 Evaluate option to increase implementation of on-site retention in Forms 4.3-2, 4.3-3, and 4.3-4 in excess of LID DCV toward achieving HCOC volume reduction*

3 Remaining volume for HCOC volume capture (ft^3): -3,050
Item 1 – Item 2

4 Volume capture provided by incorporating additional on-site or off-site retention BMPs (ft^3): 0 *Existing downstream BMP may be used to demonstrate additional volume capture (if so, attach to this WQMP a hydrologic analysis showing how the additional volume would be retained during a 2-yr storm event for the regional watershed)*

5 If Item 4 is less than Item 3, incorporate in-stream controls on downstream waterbody segment to prevent impacts due to hydromodification ☐ *Attach in-stream control BMP selection and evaluation to this WQMP*

6 Is Form 4.2-2 Item 11 less than or equal to 5%: Yes ☐ No ☒

If yes, HCOC performance criteria is achieved. If no, select one or more mitigation options below:

- Demonstrate increase in time of concentration achieved by proposed LID site design, LID BMP, and additional on-site or off-site retention BMP ☒ **(See Hydrology Report attached hereto as Appendix O in Section 6.4.)**
  BMP upstream of a waterbody segment with a potential HCOC may be used to demonstrate increased time of concentration through hydrograph attenuation (if so, show that the hydraulic residence time provided in BMP for a 2-year storm event is equal or greater than the addition time of concentration requirement in Form 4.2-4 Item 15)
- Increase time of concentration by preserving pre-developed flow path and/or increase travel time by reducing slope and increasing cross-sectional area and roughness for proposed on-site conveyance facilities ☐
- Incorporate appropriate in-stream controls for downstream waterbody segment to prevent impacts due to hydromodification, in a plan approved and signed by a licensed engineer in the State of California ☐

7 Form 4.2-2 Item 12 less than or equal to 5%: Yes ☐ No ☒

If yes, HCOC performance criteria is achieved. If no, select one or more mitigation options below:

- Demonstrate reduction in peak runoff achieved by proposed LID site design, LID BMPs, and additional on-site or off-site retention BMPs ☒ **(See Hydrology Report attached hereto as Appendix O in Section 6.4.)**
  BMPs upstream of a waterbody segment with a potential HCOC may be used to demonstrate additional peak runoff reduction through hydrograph attenuation (if so, attach to this WQMP, a hydrograph analysis showing how the peak runoff would be reduced during a 2-yr storm event)
- Incorporate appropriate in-stream controls for downstream waterbody segment to prevent impacts due to hydromodification, in a plan approved and signed by a licensed engineer in the State of California ☐

Form 4.3-10 Hydromodification Control BMPs (DA 2)

1 Volume reduction needed for HCOC performance criteria (ft^3): 1,052 *(Form 4.2-2 Item 4 * 0.95) – Form 4.2-2 Item 1*	2 On-site retention with site design hydrologic source control, infiltration, and harvest and use LID BMP (ft^3): 1,484 *Sum of Form 4.3-9 Items 2, 3, and 4 Evaluate option to increase implementation of on-site retention in Forms 4.3-2, 4.3-3, and 4.3-4 in excess of LID DCV toward achieving HCOC volume reduction*
3 Remaining volume for HCOC volume capture (ft^3): -432 *Item 1 – Item 2*	4 Volume capture provided by incorporating additional on-site or off-site retention BMPs (ft^3): 0 *Existing downstream BMP may be used to demonstrate additional volume capture (if so, attach to this WQMP a hydrologic analysis showing how the additional volume would be retained during a 2-yr storm event for the regional watershed)*

5 If Item 4 is less than Item 3, incorporate in-stream controls on downstream waterbody segment to prevent impacts due to hydromodification ☐ *Attach in-stream control BMP selection and evaluation to this WQMP*

6 Is Form 4.2-2 Item 11 less than or equal to 5%: Yes ☐ No ☒

If yes, HCOC performance criteria is achieved. If no, select one or more mitigation options below:

- Demonstrate increase in time of concentration achieved by proposed LID site design, LID BMP, and additional on-site or off-site retention BMP ☒ **(See Hydrology Report attached hereto as Appendix O in Section 6.4.)**
  BMP upstream of a waterbody segment with a potential HCOC may be used to demonstrate increased time of concentration through hydrograph attenuation (if so, show that the hydraulic residence time provided in BMP for a 2-year storm event is equal or greater than the addition time of concentration requirement in Form 4.2-4 Item 15)
- Increase time of concentration by preserving pre-developed flow path and/or increase travel time by reducing slope and increasing cross-sectional area and roughness for proposed on-site conveyance facilities ☐
- Incorporate appropriate in-stream controls for downstream waterbody segment to prevent impacts due to hydromodification, in a plan approved and signed by a licensed engineer in the State of California ☐

7 Form 4.2-2 Item 12 less than or equal to 5%: Yes ☐ No ☒

If yes, HCOC performance criteria is achieved. If no, select one or more mitigation options below:

- Demonstrate reduction in peak runoff achieved by proposed LID site design, LID BMPs, and additional on-site or off-site retention BMPs ☒ **(See Hydrology Report attached hereto as Appendix O in Section 6.4.)**
  BMPs upstream of a waterbody segment with a potential HCOC may be used to demonstrate additional peak runoff reduction through hydrograph attenuation (if so, attach to this WQMP, a hydrograph analysis showing how the peak runoff would be reduced during a 2-yr storm event)
- Incorporate appropriate in-stream controls for downstream waterbody segment to prevent impacts due to hydromodification, in a plan approved and signed by a licensed engineer in the State of California ☐

4.4 Alternative Compliance Plan (if applicable)

Describe an alternative compliance plan (if applicable) for projects not fully able to infiltrate, harvest and use, or biotreat the DCV via on-site LID practices. A project proponent must develop an alternative compliance plan to address the remainder of the LID DCV. Depending on project type some projects may qualify for water quality credits that can be applied to reduce the DCV that must be treated prior to development of an alternative compliance plan (see Form 2.4-1, Water Quality Credits). Form 4.3-9 Item 8 includes instructions on how to apply water quality credits when computing the DCV that must be met through alternative compliance. Alternative compliance plans may include one or more of the following elements:

- On-site structural treatment control BMP - All treatment control BMP should be located as close to possible to the pollutant sources and should not be located within receiving waters;
- Off-site structural treatment control BMP - Pollutant removal should occur prior to discharge of runoff to receiving waters;
- Urban runoff fund or In-lieu program, if available

Depending upon the proposed alternative compliance plan, approval by the executive officer may or may not be required (see Section 6 of the TGD for WQMP).

Section 5 Inspection and Maintenance Responsibility for Post Construction BMP

All BMP included as part of the project WQMP are required to be maintained through regular scheduled inspection and maintenance (refer to Section 8, Post Construction BMP Requirements, in the TGD for WQMP). Fully complete Form 5-1 summarizing all BMP included in the WQMP. Attach additional forms as needed. The WQMP shall also include a detailed Operation and Maintenance Plan for all BMP and may require a Maintenance Agreement (consult the jurisdiction's LIP). If a Maintenance Agreement is required, it must also be attached to the WQMP.

Form 5-1 BMP Inspection and Maintenance (use additional forms as necessary)

BMP	Responsible Party(s)	Inspection/ Maintenance Activities Required	Minimum Frequency of Activities
N1. Education of Property Owners, Tenants and Occupants on Stormwater BMPs	Soni 2012 Irrevocable Trusts (Owner)	The owner shall be familiar with the contents of this WQMP and shall provide BMP information materials to the first residents/occupants/tenants on management practices for residential developments that contribute to the protection of stormwater quality. (See Appendix K in Section 6.4 for the applicable BMP Educational Materials.) For developments with POA and residential projects of more than fifty (50) dwelling units, project conditions of approval will require that the POA periodically provide environmental awareness education materials, made available by the municipalities, to all members. Among other things, these materials will describe the use of chemicals (including household type) that should be limited to the property, with no discharge of wastes via hosing or other direct discharge to gutters, catch basins and storm drains. Educational materials are available from the San Bernardino Stormwater Program and can be downloaded at: http://www.sbcountystormwater.org/gov_out.html.	Frequency: Continuous
N2. Activity Restrictions	Soni 2012 Irrevocable Trusts (Owner)	The owner will implement use /activity restrictions for the project for the purpose of surface water quality protection through the use of conditions, covenants and restrictions (CCRs).	Frequency: Continuous
N3. Landscape Management BMPs	Soni 2012 Irrevocable Trusts (Owner)	The owner will identify on-going landscape maintenance requirements consistent with applicable local stormwater quality ordinances that will include fertilizer and/or pesticide application restrictions and mowing and trimmings containment and disposal.	Frequency: Continuous

Form 5-1 BMP Inspection and Maintenance (use additional forms as necessary)

BMP	Responsible Party(s)	Inspection/ Maintenance Activities Required	Minimum Frequency of Activities
N4. BMP Maintenance	Soni 2012 Irrevocable Trusts (Owner)	The owner will be responsible for implementation of each non- structural BMP and scheduled cleaning and/or maintenance of all structural BMP facilities per this Form.	Frequency: Continuous
N6. Local Water Quality Ordinances	Soni 2012 Irrevocable Trusts (Owner)	The owner will comply with any applicable local water quality ordinances.	Frequency: Continuous
N7. Spill Contingency Plan	Soni 2012 Irrevocable Trusts (Owner)	The owner will prepare a Spill Contingency Plan based on specified types of building or suite occupancies. The Plan will mandate stockpiling of cleanup materials, notification of responsible agencies, disposal of cleanup materials, documentation, etc.	Frequency: Upon Occupancy
N10. Uniform Fire Code Implementation	Soni 2012 Irrevocable Trusts (Owner)	The owner shall require all residents to abide by the Uniform Fire Code.	Frequency: Continuous
N11. Litter / Debris Control Program	Soni 2012 Irrevocable Trusts (Owner)	The owner/POA will implement trash management and litter control procedures throughout the site aimed at reducing pollution of drainage water. The owner/POA may contract with its landscape maintenance firm to provide this service during regularly scheduled maintenance, which should consist of litter patrol, emptying of trash receptacles in common areas, and noting/reporting trash disposal violations by tenants/homeowners.	Frequency: Weekly
N14. Catch Basin Inspection Program	Soni 2012 Irrevocable Trusts (Owner)	On-site catch basins shall be inspected, cleaned and maintained on an annual basis, in the early fall prior to the start of the rainy season, and before and after all major storms. Catch basins shall be monitored for evidence of illegal dumping on an as-needed frequency.	Frequency: Annually, and before and after all major storms
N15. Vacuum Sweeping of Private Streets and Parking Lots	Soni 2012 Irrevocable Trusts (Owner)	The owner/POA will ensure that the project's drive aisles and parking areas will be swept on a monthly basis, or more often if necessary, using a vacuum assisted sweeper.	Frequency: Monthly, or more often if necessary
N17. Comply With All Other Applicable NPDES Permits	Soni 2012 Irrevocable Trusts (Owner)	The owner shall comply with the statewide General Construction Permit during the entire period of construction by filing an NOI and SWPPP with the State Water Board and complying with all BMP implementation and reporting requirements.	Frequency: Continuous

Form 5-1 BMP Inspection and Maintenance (use additional forms as necessary)

BMP	Responsible Party(s)	Inspection/ Maintenance Activities Required	Minimum Frequency of Activities
S1. Storm Drain System Stenciling and Signage	Soni 2012 Irrevocable Trusts (Owner)	Provide storm drain system stenciling and signage. The stencil shall be blue on a white background with lettering 2-1/2'" in height and reading "No Dumping -Drains to River." A fish or similar water dependent creature silhouette may be included subject to City approval. In lieu of a stencil, a catch basin curb marker, circular or rectangular, at least 4" in height or diameter, may be used. The message will be the same and is subject to City approval. A painted circular stencil shall not be bigger than 8" in diameter. Legibility will be checked and repainted annually.	Frequency: Annually
S4. Use Efficient Irrigation Systems & Landscape Design	Soni 2012 Irrevocable Trusts (Owner)	Irrigation systems shall include reducers or shut off valves triggered by a pressure drop. Timers will be used to avoid over watering and watering cycles shall be adjusted seasonally. Plants with similar watering requirements will be grouped, and native or drought tolerant species will be used where appropriate.	Frequency: Continuous
S5. Finish Grade of Land-scaped Areas at a Minimum of 1-2 Inches Below Top of Curb, Sidewalk or Pavement	Soni 2012 Irrevocable Trusts (Owner)	Landscaped areas will be finish-graded at a minimum of 1-2 inches below top of curb or sidewalk for increased retention of stormwater/irrigation water.	Frequency: Continuous
LID BMP #1—Onsite Infiltration (Underground Chamber)	Soni 2012 Irrevocable Trusts (Owner)	Quarterly inspections of the underground infiltration BMPs shall be conducted utilizing the designed manholes/inspection ports. The BMPs shall be cleaned when inspection reveals that accumulated sediment or trash is clogging the system. Accumulated sediment and trash can be evacuated through the manholes.	Frequency: Quarterly And Immediately After Major Storm Events
LID BMP #2—Treatment Control Measures (Proprietary Catch Basin Insert Filters—Pretreatment for Onsite Infiltration)	Soni 2012 Irrevocable Trusts (Owner)	Twice a year, prior to and after the rainy season, and after major storm events, the catch basin insert filters shall be visually inspected for damage, have all sediment and debris removed, and the filter medium pouches shall be replaced if necessary. The owner may conduct this maintenance itself, or may enter into a service contract for the maintenance of the insert filters as detailed in the Kristar FloGard +Plus Specifications /Maintenance Requirements brochure, a copy of which is attached hereto as Appendix I in Section 6.4.	Frequency: Every Six Months (Approximately April 1st and October 1st) and Immediately After Major Storm Events

Section 6 WQMP Attachments

6.1. Site Plan and Drainage Plan

Include a site plan and drainage plan sheet set containing the following minimum information:

- Project location
- Site boundary
- Land uses and land covers, as applicable
- Suitability/feasibility constraints
- Structural Source Control BMP locations
- Site Design Hydrologic Source Control BMP locations
- LID BMP details
- Drainage delineations and flow information
- Drainage connections

Appendix A: Vicinity Map / Existing Hydrologic Characteristics Map / Photos of Existing Site

Appendix B: Receiving Waters Map

Appendix C: San Bernardino County Project Site WAP Report

Appendix D: WQMP Site Plan

6.2 Electronic Data Submittal

Minimum requirements include submittal of PDF exhibits in addition to hard copies. Format must not require specialized software to open. If the local jurisdiction requires specialized electronic document formats (as described in their local Local Implementation Plan), this section will describe the contents (e.g., layering, nomenclature, geo-referencing, etc.) of these documents so that they may be interpreted efficiently and accurately.

Appendix E: Link to Electronic Version of Final WQMP, Water Quality Management Plan and Stormwater BMP Transfer, Access and Maintenance Agreement, Precise Grading Plans

6.3 Post Construction

Attach all O&M Plans and Maintenance Agreements for BMP to the WQMP.

Appendix F: Operation and Maintenance (O & M) Plan

Appendix G: Record of BMP Implementation, Maintenance and Inspection

Appendix H: Water Quality Management Plan and Stormwater BMP Transfer, Access and Maintenance Agreement

6.4 Other Supporting Documentation

- BMP Educational Materials
- Activity Restriction – C, C&R's & Lease Agreements

Appendix I: Kristar FloGard +PLUS Catch Basin Insert Filter Specifications (Pretreatment for Infiltration)

Appendix J: BMP Fact Sheet— INF-7: Underground Infiltration Fact Sheet (from Orange County TGD for Project WQMPs)

Appendix K: BMP Educational Materials

- **Commercial Landscape Maintenance Fact Sheet (San Bernardino County Stormwater Program Website)**
- **Stormwater Management Practices for Commercial Landscape Maintenance Brochure (San Bernardino County Stormwater Program Website)**
- **Sustainable Practices for Landscape Maintenance Brochure for Homeowners (San Bernardino County Stormwater Program Website)**
- **Construction & Development Fact Sheet (San Bernardino County Stormwater Program Website)**
- **Regulatory Information Fact Sheet (San Bernardino County Stormwater Program Website)**
- **Toxic Household Waste Brochure for Homeowners (San Bernardino County Stormwater Program Website)**
- **Pet Waste Brochure for Homeowners (San Bernardino County Stormwater Program Website)**
- **SC-35 Safer Alternative Products**
- **SC-41 Building & Grounds Maintenance**

- **SC-42 Building Repair and Construction**
- **SC-43 Parking / Storage Area Maintenance**
- **SC-44 Drainage System Maintenance**
- **SD-10 Site Design & Landscape Planning**
- **SD-12 Efficient Irrigation**
- **SD-13 Storm Drain Signage**

Appendix L: NOAA Point Precipitation Frequency Estimate for 2 Year, 1 Hour Storm

Appendix M: TGR Geotechnical, Inc.'s Geotechnical Investigation Report, Northwest Corner of E. Colton Avenue and N. Wabash Avenue, Redlands, California 92374, APN 0168-291-02, dated April 8, 2022

Appendix N: Worksheet H: Factor of Safety and Design Infiltration Rate Worksheet (DA 1);
Worksheet H: Factor of Safety and Design Infiltration Rate Worksheet (DA 2)
(from Orange County TGD for Project WQMPs)

Appendix O: Preliminary Hydrology and Hydraulic Report for Madera at Citrus Trail Residential Project, NW Corner of E. Colton Avenue and Wabash Avenue, Redlands, California, 92374, dated July 13, 2022

Appendix P: Initial Time of Concentration Nomographs, San Bernardino County Hydrology Manual Figure D-1

6.1. Site Plan and Drainage Plan

Include a site plan and drainage plan sheet set containing the following minimum information:

- Project location
- Site boundary
- Land uses and land covers, as applicable
- Suitability/feasibility constraints
- Structural Source Control BMP locations
- Site Design Hydrologic Source Control BMP locations
- LID BMP details
- Drainage delineations and flow information
- Drainage connections

APPENDICES INCLUDED IN SECTION 6.1 (Site Plan and Drainage Plan):

Appendix A: **Vicinity Map / Existing Hydrologic Characteristics Map / Photos of Existing Site**

Appendix B: **Receiving Waters Map**

Appendix C: **San Bernardino County Project Site WAP Report**

Appendix D: **WQMP Site Plan**

APPENDIX A

Vicinity Map / Existing Hydrologic Characteristics Map / Photos of Existing Site

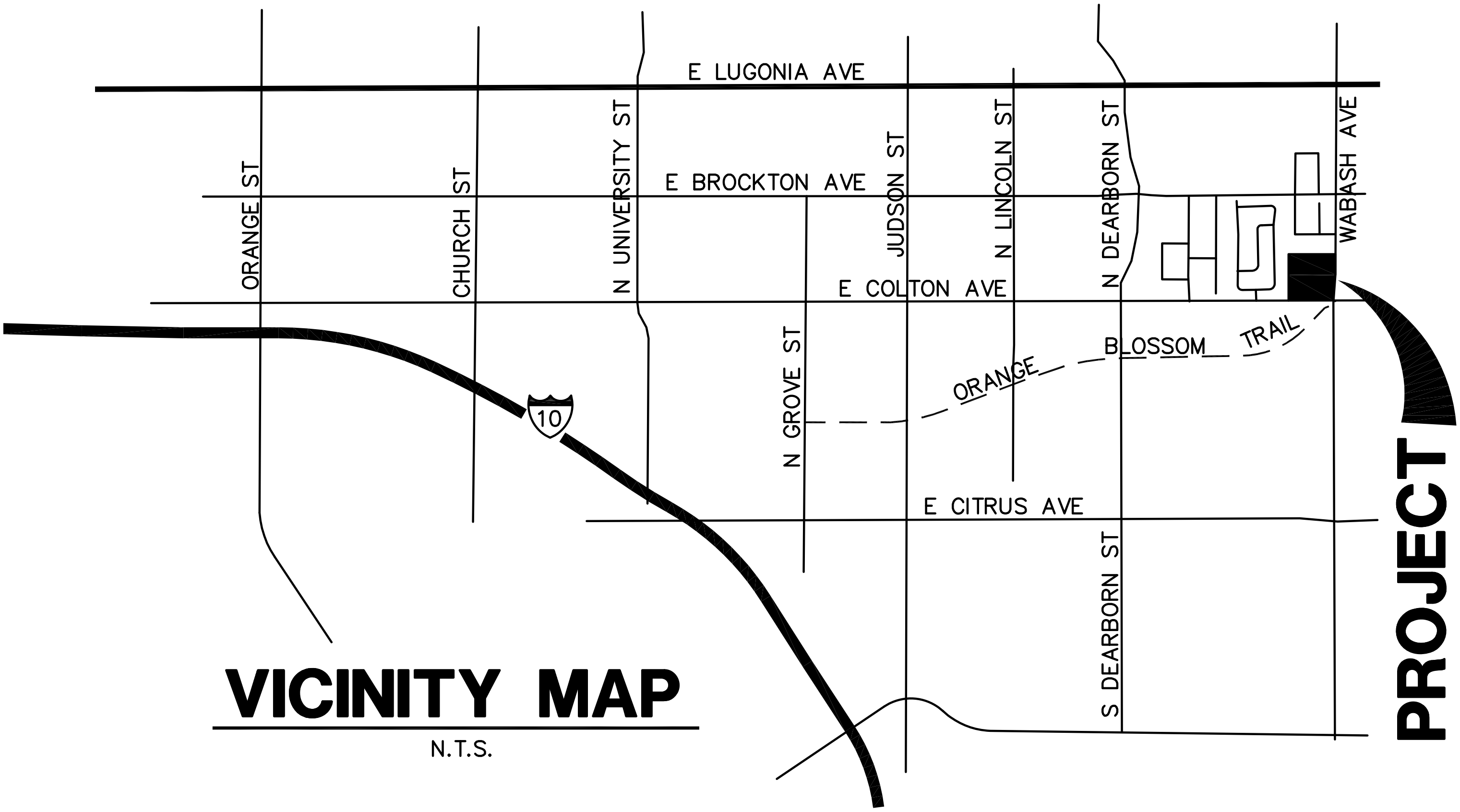

VICINITY MAP

N.T.S.

PROJECT ADDRESS

NW Corner of E. Colton Avenue and Wabash Avenue
Redlands, California

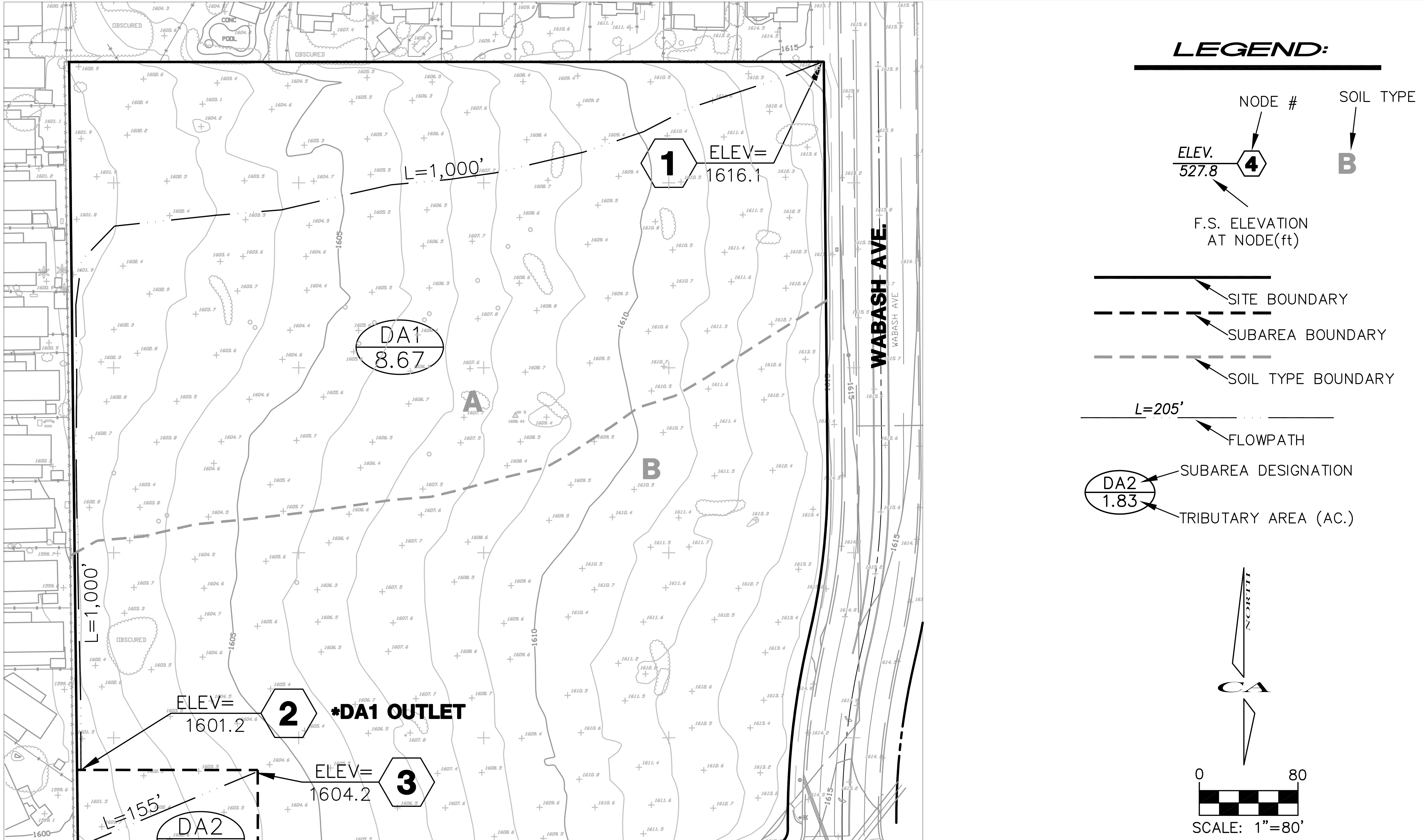

CITY OF REDLANDS

EXISTING HYDROLOGIC CHARACTERISTICS MAP

COLTON & WABASH, REDLANDS

Southeast Corner of Project Site, Looking North

Southeast Corner of Project Site, Looking West

Near Southwest Corner of Project Site, Looking Northwest

Northeast Corner of Project Site, Looking West

Northeast Corner of Project Site, Looking South

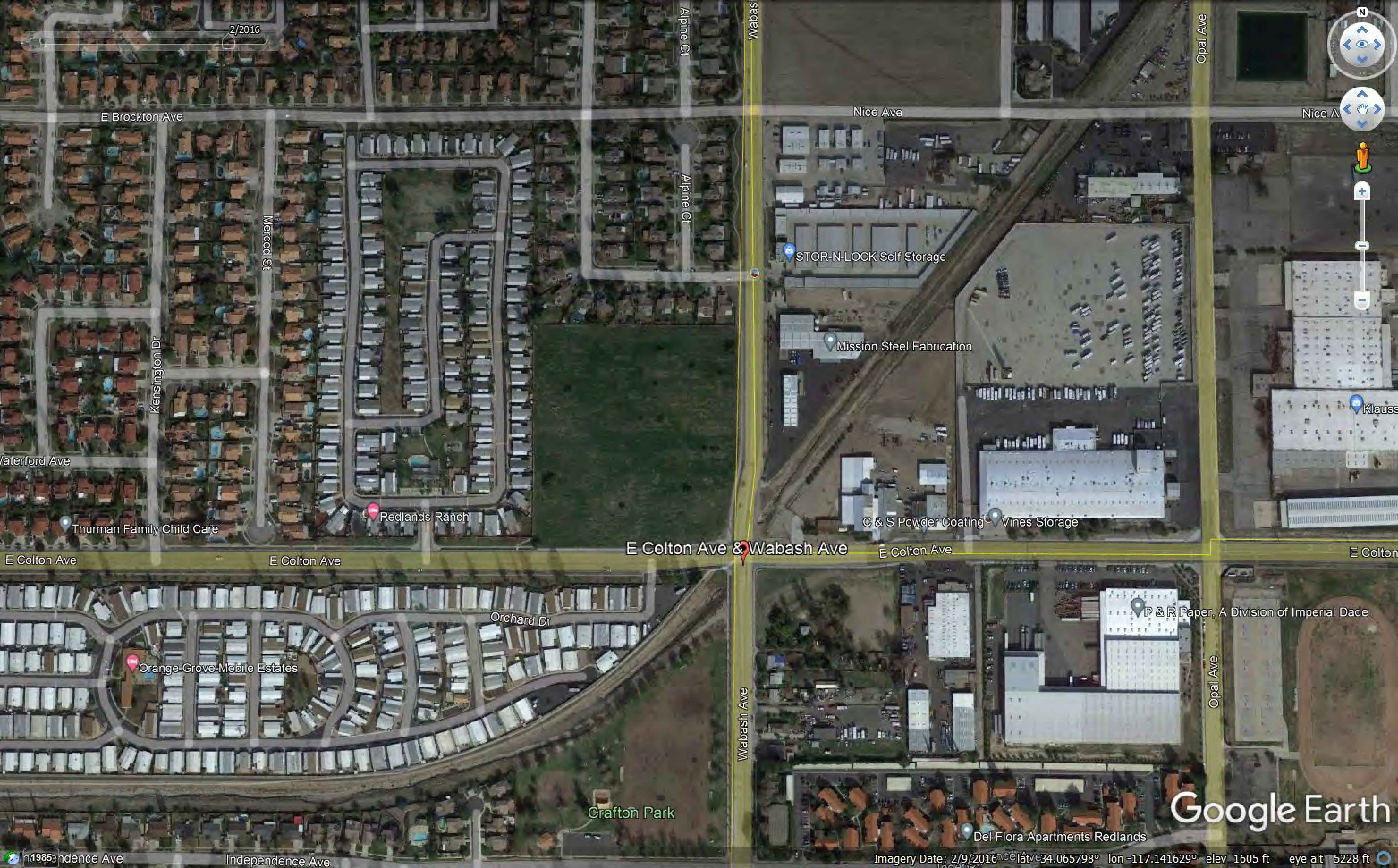
2/2016
E Brockton Ave
Nice Ave
Nice A
Alpine Ct
Alpine Ct
Wabas
Opal Ave
Merced St
Kensington Dr
STOR-N-LOCK Self Storage
Mission Steel Fabrication
Klauss
Waterford Ave
Thurman Family Child Care
Redlands Ranch
C & S Powder Coating
Vines Storage
E Colton Ave & Wabash Ave
E Colton Ave
E Colton Ave
E Colton Ave
E Colton
Orchard Dr
P & R Paper, A Division of Imperial Dade
Orange Grove Mobile Estates
Wabash Ave
Opal Ave
Crafton Park
Del Flora Apartments Redlands
Google Earth
1985
Independence Ave
Independence Ave
Imagery Date: 2/9/2016 lat 34.065798° lon -117.141629° elev 1605 ft eye alt 5228 ft

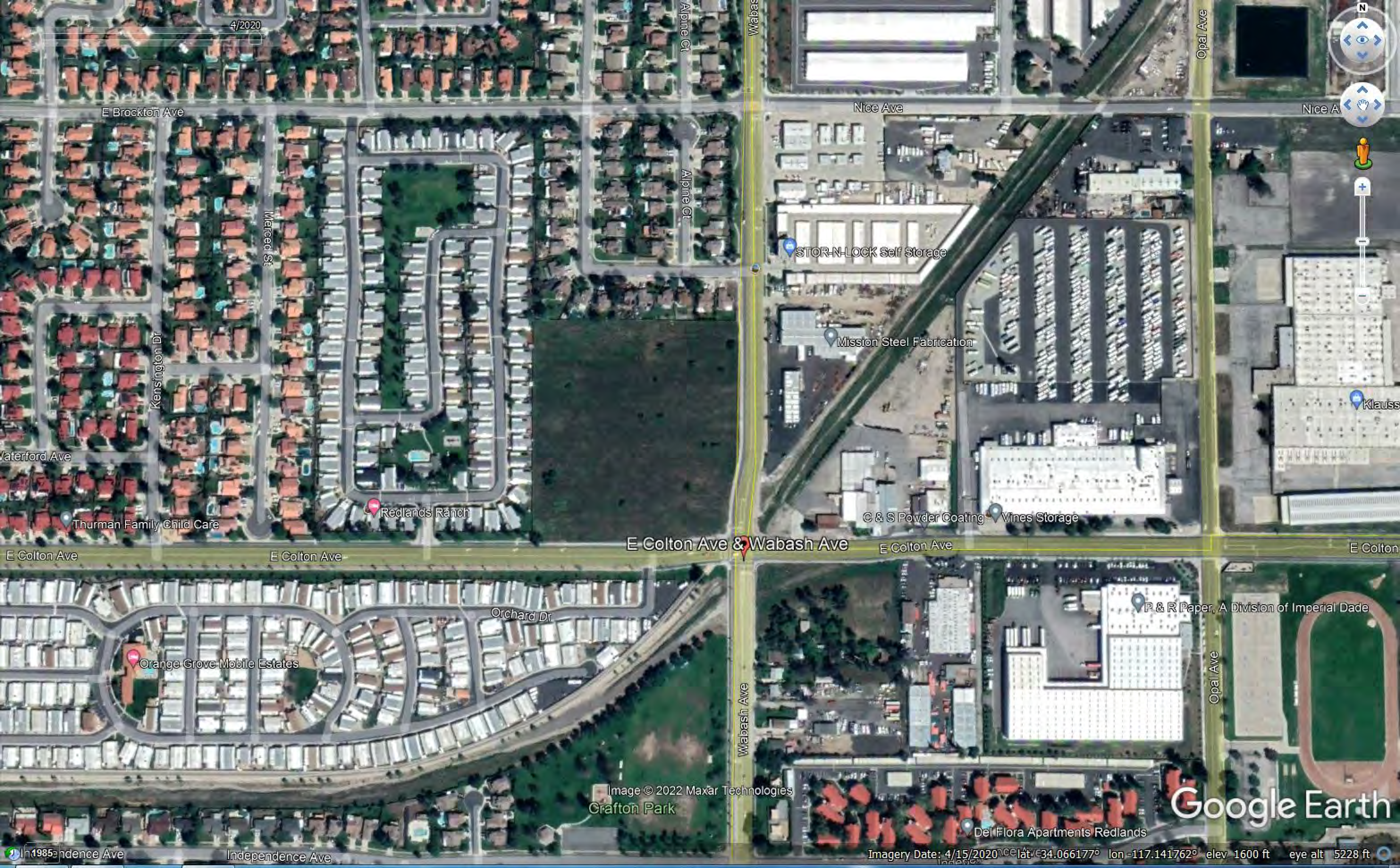
4/2020
E Brockton Ave
Nice Ave
Nice A
Alpine Ct
Alpine Ct
Wabas
Opal Ave
Merced St
Kensington Dr
Waterford Ave
STOR-N-LOCK Self Storage
Mission Steel Fabrication
Klauss
Redlands Ranch
Thurman Family Child Care
C & S Powder Coating
Vines Storage
E Colton Ave
E Colton Ave
E Colton Ave & Wabash Ave
E Colton Ave
E Colton
Orchard Dr
P & R Paper, A Division of Imperial Dade
Orange Grove Mobile Estates
Wabash Ave
Opal Ave
Image © 2022 Maxar Technologies
Crafton Park
Google Earth
Del Flora Apartments Redlands
1985
Independence Ave
Independence Ave
Imagery Date: 4/15/2020 lat 34.066177° lon -117.141762° elev 1600 ft eye alt 5228 ft

APPENDIX B

Receiving Waters Map

ArcGIS ▽ Flood Control Facilities

● **Project Site: NW Corner of E. Colton Avenue and Wabash Avenue, Redlands, CA**

Details | Basemap |

→ **Drainage Flow from Project Site to Santa Ana River**

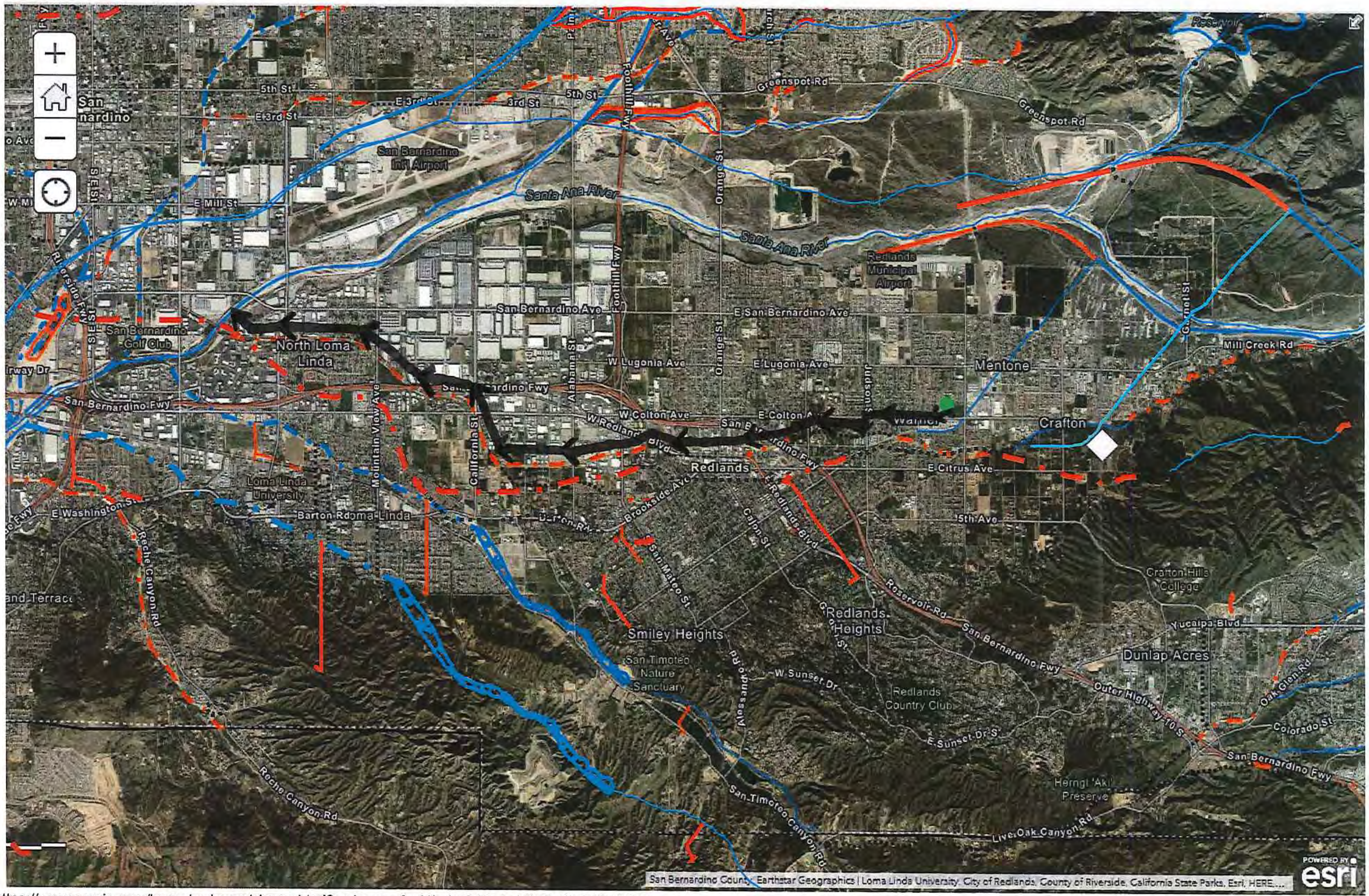

Receiving Waters Map

APPENDIX C

San Bernardino County Project Site
WAP Report

WQMP Project Report

County of San Bernardino Stormwater Program

Santa Ana River Watershed Geodatabase

Tuesday, June 21, 2022

Note: The information provided in this report and on the Stormwater Geodatabase for the County of San Bernardino Stormwater Program is intended to provide basic guidance in the preparation of the applicant's Water Quality Management Plan (WQMP) and should not be relied upon without independent verification.

Project Site Parcel Number(s):	016829102
Project Site Acreage:	9
HCOC Exempt Area:	No
Closest Receiving Waters: (Applicant to verify based on local drainage facilities and topography.)	**System Number** - 0-000-00 **Facility Name** - **Owner** - SBCFCD
Closest channel segment's susceptibility to Hydromodification:	EHM
Highest downstream hydromodification susceptibility:	High
Is this drainage segment subject to TMDLs?	No
Are there downstream drainage segments subject to TMDLs?	No
Is this drainage segment a 303d listed stream?	No
Are there 303d listed streams downstream?	Yes
Are there unlined downstream waterbodies?	No
Project Site Onsite Soil Group(s):	A, B
Environmentally Sensitive Areas within 200':	None
Groundwater Depth (FT):	-171
Parcels with potential septic tanks within 1000':	No
Known Groundwater Contamination Plumes within 1000':	No
Studies and Reports Related to Project Site:	CSDP 4 CALC SHEET FOR HYDRO CSDP 4 Hydrological Design Criteria SBVMWD High Groundwater / Pressure Zone Area

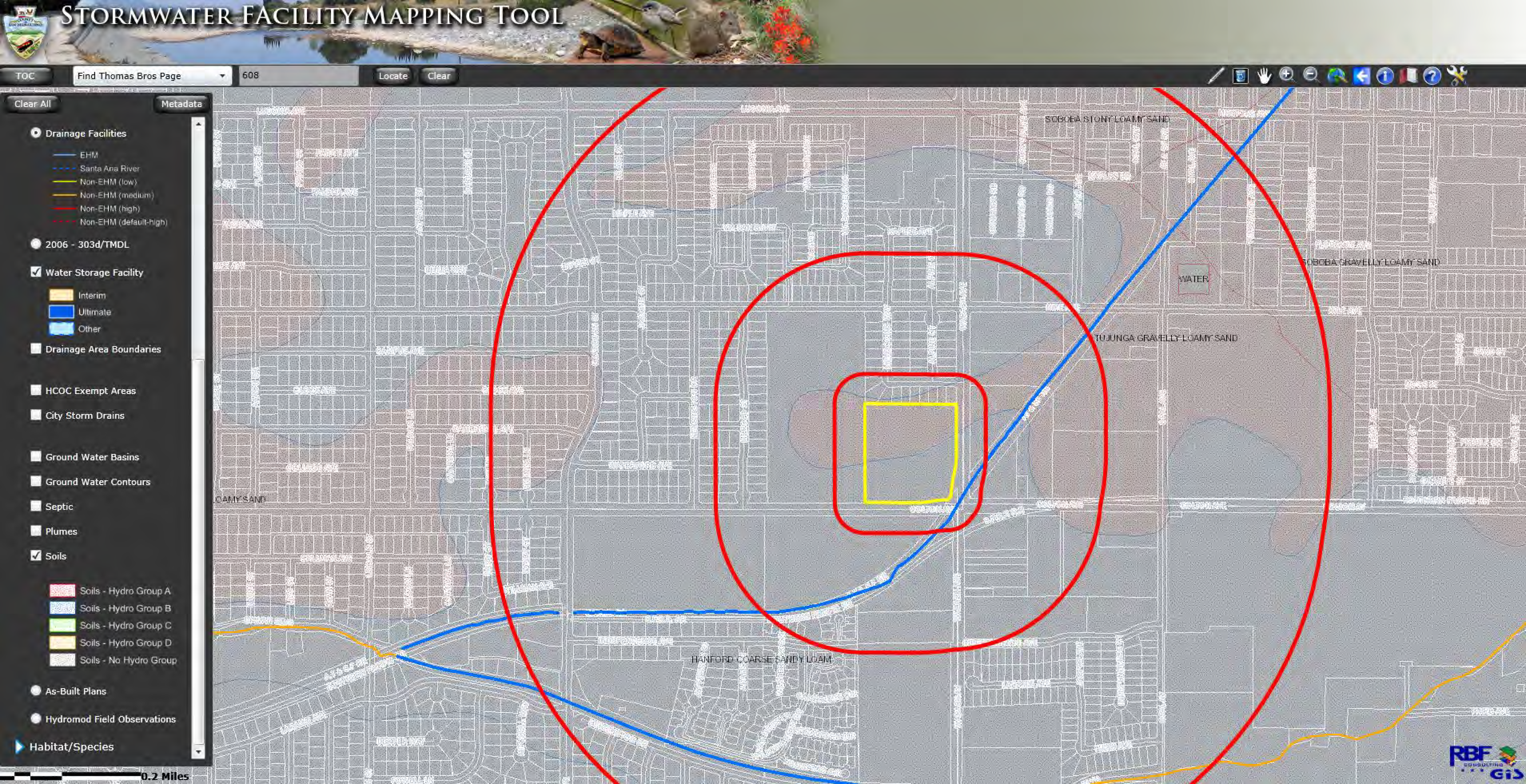

● Drainage Facilities
- EHM
- Santa Ana River
- Non-EHM (low)
- Non-EHM (medium)
- Non-EHM (high)
- Non-EHM (default-high)

○ 2006 - 303d/TMDL

☑ Water Storage Facility
- Interim
- Ultimate
- Other

☐ Drainage Area Boundaries

☐ HCOC Exempt Areas

☐ City Storm Drains

☐ Ground Water Basins

☐ Ground Water Contours

☐ Septic

☐ Plumes

☑ Soils
- Soils - Hydro Group A
- Soils - Hydro Group B
- Soils - Hydro Group C
- Soils - Hydro Group D
- Soils - No Hydro Group

○ As-Built Plans

○ Hydromod Field Observations

Habitat/Species

APPENDIX D

WQMP Site Plan

BMP LEGEND

▬	DRAINAGE AREAS **DA 1**
→	SURFACE FLOW DIRECTION
→	STORM DRAIN FLOW DIRECTION
▨	UNDERGROUND INFILTRATION PIPE PER DETAIL HEREON
🟩	LANDSCAPE AREA EFFICIENT IRRIGATION LANDSCAPE AREA RUNOFF–MINIMIZING DESIGN
🟥	PROPOSED BUILDING
▨	ASPHALT CONCRETE DRIVE AISLES
▨	CONCRETE DRIVEWAY APPROACH
🟪	CATCH BASIN WITH INSERT FILTER & STORM DRAIN STENCIL SIGNAGE

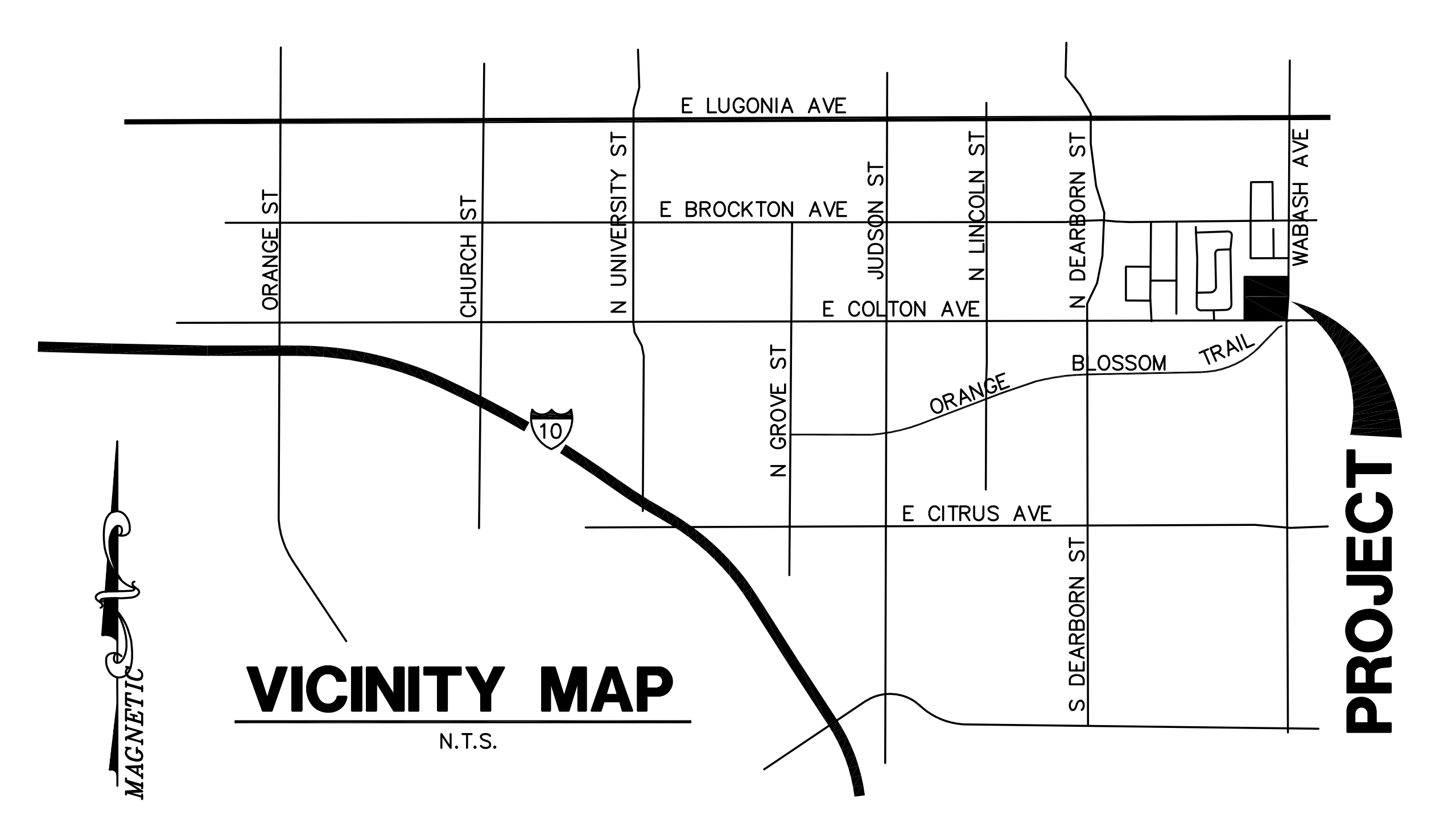

VICINITY MAP

N.T.S.

PROJECT DATA:

TOTAL SITE AREA OF PROPOSED DEVELOPMENT: 9.01 AC (392,503 SF)

BUILDING AREA: 122,630 SF
DRIVEWAYS / DRIVE AISLES / PARKING AREAS: 95,896 SF
WALKWAYS / CONC. HARDSCAPE: 95,476 SF

78,501 SF LANDSCAPING PROVIDED
(20.0% PERVIOUS AREA)

CURRENT USE: VACANT
PROPOSED USE: RESIDENTIAL

WATERSHED:
SANTA ANA RIVER

LID DCV CALCULATION

AREA 1

AREA – 8.73 AC (380,199 SF)
RUNOFF COEFFICIENT (80% IMPERVIOUS)
C = 0.858 * (0.80)^3 –0.78 * (0.80)^2 + 0.774 * (0.80) + .04 = 0.599
2YR 1 HR STORM – 0.491 IN
P6 = 1.4807 * 0.491 = 0.727 IN
DCV = 380,199 SF * 0.599 * 0.727 IN / 12IN/FT * 1.963 = 27,084 CF

BMP VOLUME CALCULATION

BMP VOLUME
PIPE CROSS SECTIONAL AREA – (50.26) * 2 CF/LF = 100.52 CF/LF
ROCK CROSS SECTIONAL AREA – 79.48 CF/LF ROCK AREA * .35 = 27.82 CF/LF
TOTAL CROSS SECTIONAL AREA – 128.34 CF/LF * 183 LF = 23,486 CF
EFFECTIVE DEPTH – 23,486 CF / 3,660 SF BOTTOM = 6.42'

Vret = (Pdesign/12 * SAinf * Tfill) + (SAres * Dres * Nagg)
Pdesign = 7.98" MEASURED / 2.00 S.F. = 3.99"/HR
SAinf = 3,660 SF
SAres = 3,660 SF
Tfill = 3 HRS
Dres = EFFECTIVE DEPTH = 6.42'
Nagg = 1.0 (EFFECTIVE DEPTH ACCOUNTED FOR ROCK)
Vret = (3.99/12 * 3,660 * 3) + (3,660 * 6.42 * 1)
Vret = 27,148 CF
BMP VOLUME (27,148 CF) > DCV VOLUME (27,084 CF)

EXISTING CN = 38 (AREA WEIGHTED)
PROPOSED CN = 84.8 (AREA WEIGHTED)
V_{HCOC}= VOLUME REDUCTION NEEDED TO MEET HCOC REQUIREMENTS
PRE–RV = PRE–DEVELOPED RUNOFF VOLUME = 2,615 CF
POST–RV = POST DEVELOPED RUNOFF VOLUME = 28,119 CF
V_{HCOC}= (POST–RV * 0.95) – PRE–RV = (28,199 CF * 0.95) – 2,615 CF
= 24,098 CF
BMP VOLUME (27,148 CF) > V_{HCOC} (24,098 CF)

LID DCV CALCULATION

AREA 2

AREA – 0.28 AC (12,304 SF)
RUNOFF COEFFICIENT (80% IMPERVIOUS)
C = 0.858 * (0.80)^3 –0.78 * (0.80)^2 + 0.774 * (0.80) + .04 = 0.599
2YR 1 HR STORM – 0.491 IN
P6 = 1.4807 * 0.594 = 0.727 IN
DCV = 12,304 SF * 0.599 * 0.727 IN / 12IN/FT * 1.963 = 876 CF

BMP VOLUME CALCULATION

BMP VOLUME
PIPE CROSS SECTIONAL AREA – (50.26) CF/LF
ROCK CROSS SECTIONAL AREA – 39.74 CF/LF ROCK AREA * .35 = 13.91 CF/LF
TOTAL CROSS SECTIONAL AREA – 64.17 CF/LF * 20 LF = 1,283 CF
EFFECTIVE DEPTH – 1,283 CF / 200 SF BOTTOM = 6.42'

Vret = (Pdesign/12 * SAinf * Tfill) + (SAres * Dres * Nagg)
Pdesign = 7.98" MEASURED / 2.00 S.F. = 3.99"/HR
SAinf = 200 SF
SAres = 200 SF
Tfill = 3 HRS
Dres = EFFECTIVE DEPTH = 6.42'
Nagg = 1.0 (EFFECTIVE DEPTH ACCOUNTED FOR ROCK)
Vret = (3.99/12 * 200 * 3) + (200 * 6.42 * 1)
Vret = 1,484 CF
BMP VOLUME (1,484 CF) > DCV VOLUME (876 CF)

EXISTING CN = 61 (AREA WEIGHTED)
PROPOSED CN = 89.6 (AREA WEIGHTED)
V_{HCOC}= VOLUME REDUCTION NEEDED TO MEET HCOC REQUIREMENTS
PRE–RV = PRE–DEVELOPED RUNOFF VOLUME = 105 CF
POST–RV = POST DEVELOPED RUNOFF VOLUME = 1,218 CF
V_{HCOC}= (POST–RV * 0.95) – PRE–RV = (1,218 CF * 0.95) – 105 CF
= 1,052 CF
BMP VOLUME (1,484 CF) > V_{HCOC} (1,052 CF)

STENCIL SAMPLE*

*THE STENCIL SHALL BE BLUE ON A WHITE BACKGROUND WITH LETTERING 2–1/2" IN HEIGHT AND READING "NO DUMPING –DRAINS TO RIVER". A FISH OR SIMILAR WATER DEPENDENT CREATURE SILHOUETTE MAY BE INCLUDED SUBJECT TO CITY APPROVAL. IN LIEU OF A STENCIL, A CATCH BASIN CURB MARKER, CIRCULAR OR RECTANGULAR, AT LEAST 4" IN HEIGHT OR DIAMETER, MAY BE USED. THE MESSAGE WILL BE THE SAME AND IS SUBJECT TO CITY APPROVAL. A PAINTED CIRCULAR STENCIL SHALL NOT BE BIGGER THAN 8"IN DIAMETER. LEGIBILITY WILL BE CHECKED AND REPAINTED ANNUALLY.

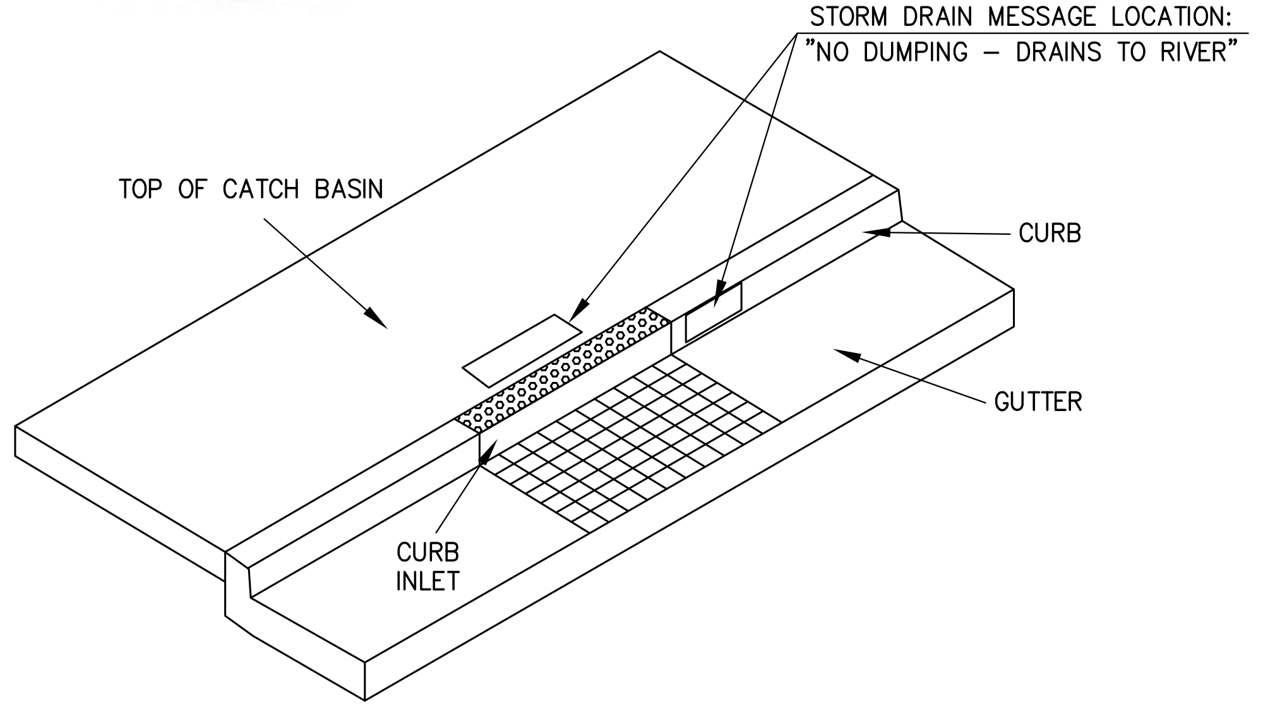

STORM DRAIN STENCIL SIGNAGE – CURB INLET

NTS

BMP LOCATIONS

AREA#1 – LATITUDE: 34.063951° / LONGITUDE: –117.140385°
AREA#2 – LATITUDE: 34.062953° / LONGITUDE: –117.140843°

FEASIBILITY CONSTRAINTS

THERE ARE NO FEASIBILITY CONSTRAINTS FOR INFILTRATION

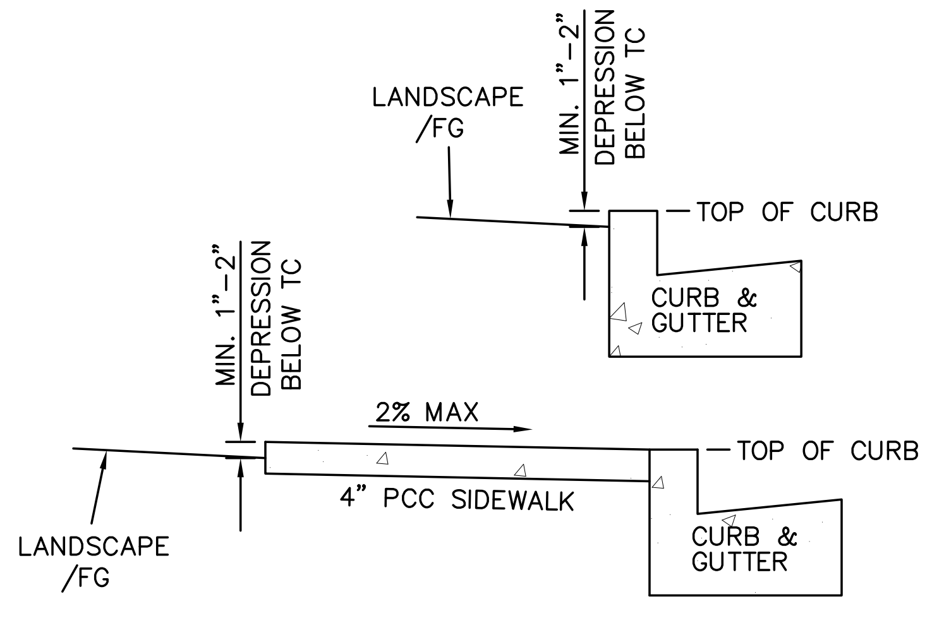

LANDSCAPE DEPRESSION DETAIL

SCALE: 1"=2'

FloGard®

Catch Basin Insert Filter

Curb Inlet Style

DRAWING NO. FGP-0002

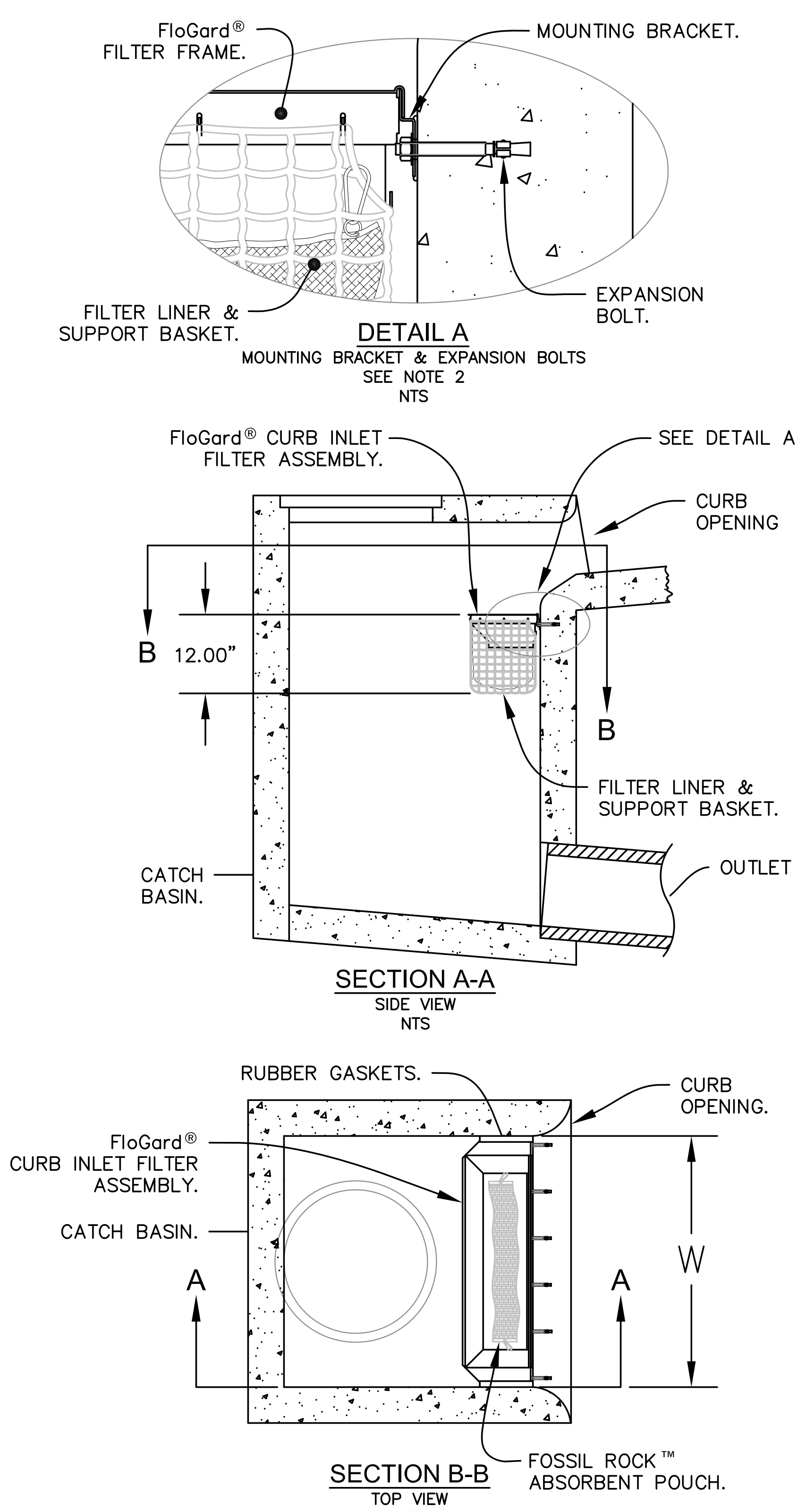

NOTES:

1. Filter insert shall have a high flow bypass feature.
2. Filter support frame shall be constructed from stainless steel Type 304.
3. Filter medium shall be Fossil Rock, installed and maintained in accordance with manufacturer specifications.
4. Storage capacity reflects 80% of maximum solids collection prior to impeding filtering bypass.

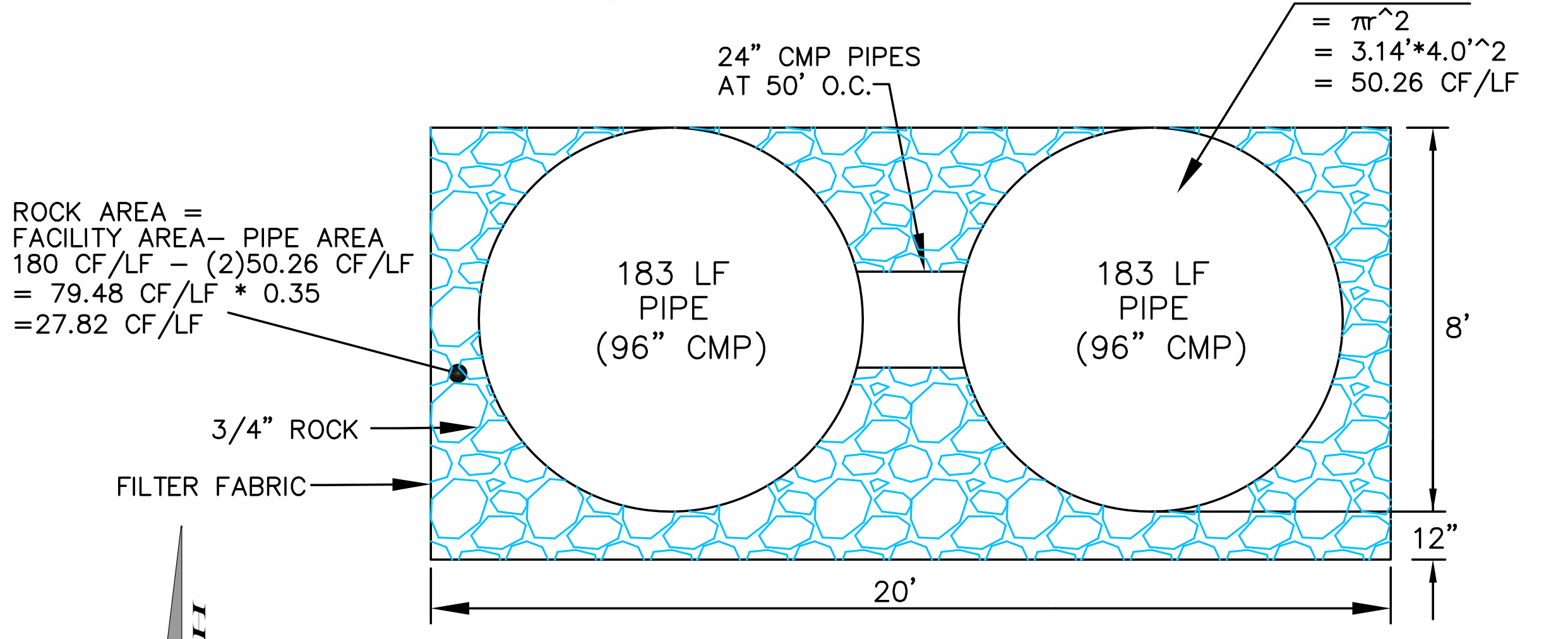

DUAL INFILTRATION BMP CROSS SECTION

SCALE: 1"=4'

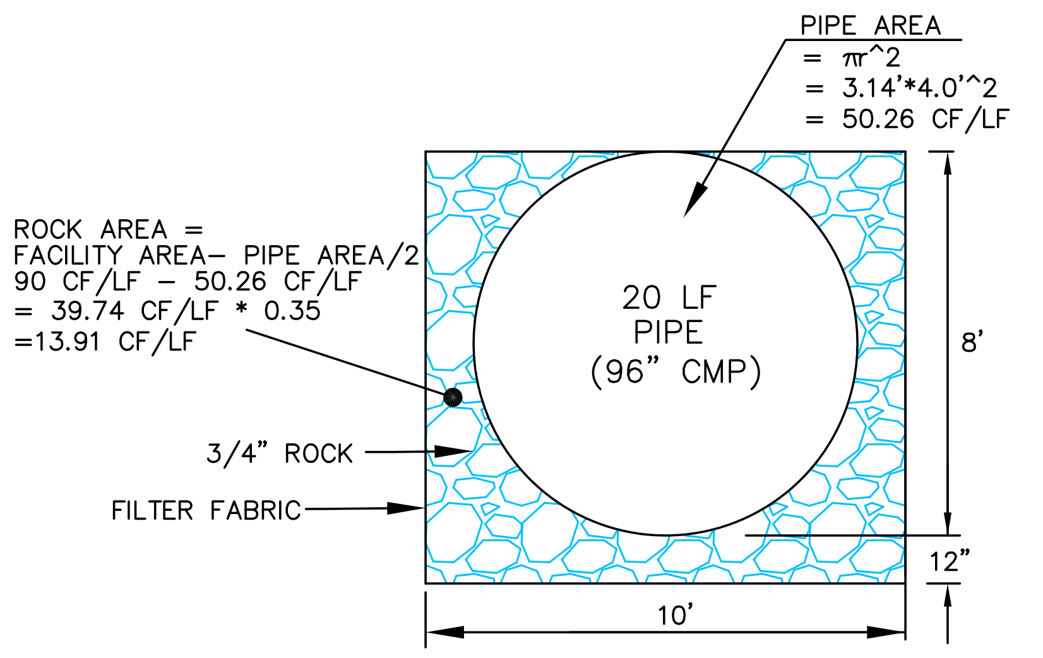

INFILTRATION BMP CROSS SECTION

SCALE: 1"=4'

NORTH

GRAPHIC SCALE
0 50
(IN FEET)
1 inch = 50 ft.

PRELIMINARY WQMP SITE PLAN
COLTON AVE + WABASH AVE
REDLANDS, CA

Soni 2012 Irrevocable Trusts
1423 Georgina Avenue Santa Monica
Santa Monica, CA 90402
(949) 922–7075
Contact: Vanita Soni Puri

REGISTERED PROFESSIONAL ENGINEER
FRED CORNWELL
No. 45591
CIVIL
STATE OF CALIFORNIA

FRED CORNWELL R.C.E. 45591
DATE

PREPARED BY:
CA ENGINEERING, INC.
Planning . Engineering . Surveying
13821 NEWPORT AVE., STE 110
TUSTIN, CA 92780
949-724-9480 949-724-9484 FAX

DATE	BY	REVISION

SHEET
C1.3

DATE
Oct 05 2022

JOB NO.
816–1

Sht. C–2

6.2 Electronic Data Submittal

Minimum requirements include submittal of PDF exhibits in addition to hard copies. Format must not require specialized software to open. If the local jurisdiction requires specialized electronic document formats (as described in their local Local Implementation Plan), this section will describe the contents (e.g., layering, nomenclature, geo-referencing, etc.) of these documents so that they may be interpreted efficiently and accurately.

APPENDICES INCLUDED IN SECTION 6.2 (Electronic Data Submittal):

Appendix E: **Link to Electronic Version of Final WQMP, Water Quality Management Plan and Stormwater BMP Transfer, Access and Maintenance Agreement, Precise Grading Plans**

APPENDIX E

Link to Electronic Version of Final WQMP, Water Quality Management Plan and Stormwater BMP Transfer, Access and Maintenance Agreement, Precise Grading Plans

(To Be Provided in Final Approved WQMP)

6.3 Post Construction

Attach all O&M Plans and Maintenance Agreements for BMP to the WQMP.

APPENDICES INCLUDED IN SECTION 6.3 (Post Construction):

Appendix F: **Operation and Maintenance (O & M) Plan**

Appendix G: **Record of BMP Implementation, Maintenance and Inspection**

Appendix H: **Water Quality Management Plan and Stormwater BMP Transfer, Access and Maintenance Agreement**

APPENDIX F

Operation and Maintenance (O & M) Plan

OPERATION AND MAINTENANCE (O&M) PLAN

Water Quality Management Plan
for

Madera at Citrus Trail Residential Project

NW Corner of E. Colton Avenue and Wabash Avenue
Redlands, California 92374

Appendix F, Operation and Maintenance Plan
Note: OWNER = Soni 2012 Irrevocable Trusts

BMP Applicable? Yes/No	BMP Name and BMP Implementation, Maintenance and Inspection Procedures	Implementation, Maintenance, and Inspection Frequency and Schedule	Person or Entity with Operation & Maintenance Responsibility
Non-Structural Source Control BMPs			
Y	N1. Education of Property Owners, Tenants and Occupants on Stormwater BMPs The owner shall be familiar with the contents of the Project WQMP and shall provide BMP information materials to the first residents/occupants/tenants on management practices for residential developments that contribute to the protection of stormwater quality. (See Appendix K in Section 6.4 of the Project WQMP for the applicable BMP Educational Materials.) For developments with POA and residential projects of more than fifty (50) dwelling units, project conditions of approval will require that the POA periodically provide environmental awareness education materials, made available by the municipalities, to all members. Among other things, these materials will describe the use of chemicals (including household type) that should be limited to the property, with no discharge of wastes via hosing or other direct discharge to gutters, catch basins and storm drains. Educational materials are available from the San Bernardino Stormwater Program and can be downloaded at: http://www.sbcountystormwater.org/gov_out.html.	Frequency: Continuous	Soni 2012 Irrevocable Trusts 1423 Georgina Avenue Santa Monica, CA 90402 (949) 922-7075 vanitapuri@gmail.com

BMP Applicable? Yes/No	BMP Name and BMP Implementation, Maintenance and Inspection Procedures	Implementation, Maintenance, and Inspection Frequency and Schedule	Person or Entity with Operation & Maintenance Responsibility
Y	N2. Activity Restrictions The owner will implement use /activity restrictions for the project for the purpose of surface water quality protection through the use of conditions, covenants and restrictions (CCRs).	Frequency: Continuous	Soni 2012 Irrevocable Trusts 1423 Georgina Avenue Santa Monica, CA 90402 (949) 922-7075 vanitapuri@gmail.com
Y	N3. Landscape Management BMPs The owner will identify on-going landscape maintenance requirements consistent with applicable local stormwater quality ordinances that will include fertilizer and/or pesticide application restrictions and mowing and trimmings containment and disposal.	Frequency: Continuous	Soni 2012 Irrevocable Trusts 1423 Georgina Avenue Santa Monica, CA 90402 (949) 922-7075 vanitapuri@gmail.com
Y	N4. BMP Maintenance The owner will be responsible for implementation of each non- structural BMP and scheduled cleaning and/or maintenance of all structural BMP facilities per the maintenance narratives in this document.	Frequency: Continuous	Soni 2012 Irrevocable Trusts 1423 Georgina Avenue Santa Monica, CA 90402 (949) 922-7075 vanitapuri@gmail.com
N	N5. Title 22 CCR Compliance		
Y	N6. Local Water Quality Ordinances The owner will comply with any applicable local water quality ordinances.	Frequency: Continuous	Soni 2012 Irrevocable Trusts 1423 Georgina Avenue Santa Monica, CA 90402 (949) 922-7075 vanitapuri@gmail.com

BMP Applicable? Yes/No	BMP Name and BMP Implementation, Maintenance and Inspection Procedures	Implementation, Maintenance, and Inspection Frequency and Schedule	Person or Entity with Operation & Maintenance Responsibility
Y	N7. Spill Contingency Plan The owner will prepare a Spill Contingency Plan based on specified types of building occupancies. The Plan will mandate stockpiling of cleanup materials, notification of responsible agencies, disposal of cleanup materials, documentation, etc.	Frequency: Upon occupancy	Soni 2012 Irrevocable Trusts 1423 Georgina Avenue Santa Monica, CA 90402 (949) 922-7075 vanitapuri@gmail.com
N	N8. Underground Storage Tank Compliance		
N	N9. Hazardous Materials Disclosure Compliance		
Y	N10. Uniform Fire Code Implementation The owner shall require all residents to abide by the Uniform Fire Code.	Frequency: Continuous	Soni 2012 Irrevocable Trusts 1423 Georgina Avenue Santa Monica, CA 90402 (949) 922-7075 vanitapuri@gmail.com
Y	N11. Litter/Debris Control Program The owner/POA will implement trash management and litter control procedures throughout the site aimed at reducing pollution of drainage water. The owner/POA may contract with its landscape maintenance firm to provide this service during regularly scheduled maintenance, which should consist of litter patrol, emptying of trash receptacles in common areas, and noting/reporting trash disposal violations by tenants/homeowners.	Frequency: Weekly	Soni 2012 Irrevocable Trusts 1423 Georgina Avenue Santa Monica, CA 90402 (949) 922-7075 vanitapuri@gmail.com
N	N12. Employee Training		
N	N13. Housekeeping of Loading Docks		

BMP Applicable? Yes/No	BMP Name and BMP Implementation, Maintenance and Inspection Procedures	Implementation, Maintenance, and Inspection Frequency and Schedule	Person or Entity with Operation & Maintenance Responsibility
Y	N14. Catch Basin Inspection Program On-site catch basins shall be inspected, cleaned and maintained on an annual basis, in the early fall prior to the start of the rainy season, and before and after all major storms. Catch basins shall be monitored for evidence of illegal dumping on an as-needed frequency.	Frequency: Annually, and before and after all major storms	Soni 2012 Irrevocable Trusts 1423 Georgina Avenue Santa Monica, CA 90402 (949) 922-7075 vanitapuri@gmail.com
Y	N15. Vacuum Sweeping of Private Streets and Parking Lots The owner/POA will ensure that the project's drive aisles and parking areas will be swept on a monthly basis, or more often if necessary, using a vacuum assisted sweeper.	Frequency: Monthly, or more often if necessary	Soni 2012 Irrevocable Trusts 1423 Georgina Avenue Santa Monica, CA 90402 (949) 922-7075 vanitapuri@gmail.com
N	N16. Other Non-structural Measures for Public Agency Projects		

BMP Applicable? Yes/No	BMP Name and BMP Implementation, Maintenance and Inspection Procedures	Implementation, Maintenance, and Inspection Frequency and Schedule	Person or Entity with Operation & Maintenance Responsibility
Y	N17. Comply With All Other Applicable NPDES Permits The owner shall comply with the statewide General Construction Permit during the entire period of construction by filing an NOI and SWPPP with the State Water Board and complying with all BMP implementation and reporting requirements. Following building occupation, the owner shall require all tenants needing coverage under the State's General Industrial Activities Permit to acquire coverage.	Frequency: Continuous	Soni 2012 Irrevocable Trusts 1423 Georgina Avenue Santa Monica, CA 90402 (949) 922-7075 vanitapuri@gmail.com

BMP Applicable? Yes/No	BMP Name and BMP Implementation, Maintenance and Inspection Procedures	Implementation, Maintenance, and Inspection Frequency and Schedule	Person or Entity with Operation & Maintenance Responsibility
Structural Source Control BMPs			
Y	S1. Provide Storm Drain System Stenciling and Signage Storm drain stencils are highly visible source control messages, typically placed directly adjacent to storm drain inlets. The stencils contain a brief statement that prohibits the dumping of improper materials into the MS4. Graphical icons, either illustrating anti-dumping symbols or images of receiving water fauna, are effective supplements to the anti-dumping message. Stencils and signs alert the public to the destination of pollutants discharged into stormwater. The following requirements will be included in the project design and shown on the project plans: - Provide stenciling or labeling of all storm drain inlets and catch basins, constructed or modified, within the project area with prohibitive language (such as: “No Dumping – Flows to Creek”) and/or graphical icons to discourage illegal dumping. - Maintain legibility of stencils and signs.	Frequency: Annually	Soni 2012 Irrevocable Trusts 1423 Georgina Avenue Santa Monica, CA 90402 (949) 922-7075 vanitapuri@gmail.com
N	S2. Design and Construct Outdoor Material Storage Areas to Reduce Pollution Introduction		
N	S3. Design and Construct Trash and Waste Storage Areas to Reduce Pollution Introduction		

BMP Applicable? Yes/No	BMP Name and BMP Implementation, Maintenance and Inspection Procedures	Implementation, Maintenance, and Inspection Frequency and Schedule	Person or Entity with Operation & Maintenance Responsibility
Y	S4. Use Efficient Irrigation Systems & Landscape Design, Water Conservation, Smart Controllers, and Source Control The following methods to reduce excessive irrigation runoff and pollutant introduction will be incorporated for all landscaped areas where applicable: (1) employing rain shutoff devices to prevent irrigation after precipitation; (2) designing irrigation systems to each landscape area's specific water requirements; (3) using flow reducers or shutoff valves triggered by a pressure drop to control water loss in the event of broken sprinkler heads or lines; (4) the timing and application methods of irrigation water shall be designed to minimize the runoff of excess irrigation water into the municipal storm drain system; (5) employing other comparable, equally effective, methods to reduce irrigation water runoff; grouping plants with similar water requirements in order to reduce excess irrigation runoff and promote surface filtration; (6) choosing plants with low irrigation requirements (for example, native or drought tolerant species); (7) using mulches (such as wood chips or shredded wood products) in planter areas without ground cover to minimize sediment in runoff; (8) installing appropriate plant materials for the location, in accordance with amount of sunlight and climate, and using native plant material where possible and/or as recommended by the landscape architect; (9) leaving a vegetative barrier along the property boundary and interior watercourses, to act as a pollutant filter, where appropriate and feasible; and (10) choosing plants that minimize or eliminate the use of fertilizer or pesticides to sustain growth.	Frequency: Continuous	Soni 2012 Irrevocable Trusts 1423 Georgina Avenue Santa Monica, CA 90402 (949) 922-7075 vanitapuri@gmail.com

BMP Applicable? Yes/No	BMP Name and BMP Implementation, Maintenance and Inspection Procedures	Implementation, Maintenance, and Inspection Frequency and Schedule	Person or Entity with Operation & Maintenance Responsibility
Y	S5. Finish Grade of Landscaped Areas at a Minimum of 1-2 Inches Below Top of Curb, Sidewalk or Pavement All landscape pockets, fingers, setback areas, parkway strips, street medians, etc., will be finish-graded at a minimum of 1-2 inches below top of curb or sidewalk for increased retention/infiltration of stormwater and irrigation water.	Frequency: Continuous	Soni 2012 Irrevocable Trusts 1423 Georgina Avenue Santa Monica, CA 90402 (949) 922-7075 vanitapuri@gmail.com
N	S6. Protect Slopes and Channels and Provide Energy Dissipation		
N	S7. Covered Dock Areas		
N	S8. Covered Maintenance Bays With Spill Containment Plans		
N	S9. Vehicle Wash Areas With Spill Containment Plans		
N	S10. Covered Outdoor Processing Areas		
N	S11. Equipment Wash Areas With Spill Containment Plans		

BMP Applicable? Yes/No	BMP Name and BMP Implementation, Maintenance and Inspection Procedures	Implementation, Maintenance, and Inspection Frequency and Schedule	Person or Entity with Operation & Maintenance Responsibility
N	S12. Fueling Areas		
N	S13. Hillside Landscaping		
N	S14. Wash Water Control for Food Preparation Areas		
N	S15. Community Car Wash Racks		

BMP Applicable? Yes/No	BMP Name and BMP Implementation, Maintenance and Inspection Procedures	Implementation, Maintenance, and Inspection Frequency and Schedule	Person or Entity with Operation & Maintenance Responsibility
Low Impact Development BMPs			
Y	LID BMP #1— Onsite Infiltration (Underground Chamber) Quarterly inspections of the underground infiltration BMPs shall be conducted utilizing the designed manholes/inspection ports. The BMPs shall be cleaned when inspection reveals that accumulated sediment or trash is clogging the system. Accumulated sediment and trash can be evacuated through the manholes.	Frequency: Quarterly And Immediately After Major Storm Events	Soni 2012 Irrevocable Trusts 1423 Georgina Avenue Santa Monica, CA 90402 (949) 922-7075 vanitapuri@gmail.com
Y	LID BMP #2— Treatment Control Measures (Proprietary Catch Basin Insert Filters— Pretreatment for Onsite Infiltration) (Kristar FloGard +Plus Insert Filters or Approved Equivalent) Twice a year, prior to and after the rainy season, and after major storm events, the catch basin insert filters shall be visually inspected for damage, have all sediment and debris removed, and the filter medium pouches shall be replaced if necessary. The owner may conduct this maintenance itself, or may enter into a service contract for the maintenance of the insert filters as detailed in the Kristar FloGard +Plus Specifications /Maintenance Requirements brochure, a copy of which is attached hereto.	Frequency: Every Six Months (Approximately April 1st and October 1st) and Immediately After Major Storm Events	Soni 2012 Irrevocable Trusts 1423 Georgina Avenue Santa Monica, CA 90402 (949) 922-7075 vanitapuri@gmail.com

Required Permits

No permits are required for the implementation, operation, and maintenance of the BMPs described in this plan.

Recordkeeping

All records must be maintained for at least five (5) years and must be made available for review upon request.

Innovative stormwater management products

KRISTAR

FloGard®
+PLUS
Catch Basin Insert Filter

FloGard®+PLUS Catch Basin Insert Filter

GENERAL FILTER CONFIGURATION

FloGard®+PLUS catch basin insert filter shall provide solids filtration through a filter screen or filter liner, and hydrocarbon capture shall be effected using a non-leaching absorbent material contained in a pouch or similar removable restraint. Hydrocarbon absorbent shall not be placed at an exposed location at the entry to the filter that would allow blinding by debris and sediment without provision for self-cleaning in operation.

Filter shall conform to the dimensions of the inlet in which it is applied, allow removal and replacement of all internal components, and allow complete inspection and cleaning in the field.

FLOW CAPACITY

Filter shall provide two internal high-flow bypass locations that in total exceed the inlet peak flow capacity. Filter shall provide filtered flow capacity in excess of the required “first flush” treatment flow. Unit shall not impede flow into or through the catch basin when properly sized and installed.

MATERIALS

Filter support frame shall be constructed of type 304 stainless steel. Filter screen, when used in place of filter liner, shall be type 304 or 316 stainless steel, with an apparent opening size of not less than 4 U.S. mesh. Filter liner, when used in place of filter screen, shall be woven polypropylene geotextile fabric liner with an apparent opening size (AOS) of not less than 40 U.S. mesh as determined by ASTM D 4751. Filter liner shall include a support basket of polypropylene geogrid with stainless steel cable reinforcement.

Filter frame shall be rated at a minimum 25-year service life. All other materials, with the exception of the hydrocarbon absorbent, shall have a rated service life in excess of 2 years.

FloGard®+PLUS TEST RESULTS SUMMARY

Testing Agency	% TSS Removal	% Oil and Grease Removal	% PAH Removal
UCLA	80	70 to 80	
U of Auckland Tonking & Taylor Ltd. (for city of Auckland)	78 to 95		
U of Hawaii (for city of Honolulu)	80		20 to 40

FEATURES

- Easy to install, inspect and maintain
- Can be retrofitted to existing drain catch basins – or used in new projects
- Economical and efficient
- Catches pollutants where they are easiest to catch (at the inlet)
- No standing water – minimizes vector, bacteria and odor problems
- Can be incorporated as part of a “Treatment Train”

BENEFITS

- Lower installation, inspection and maintenance costs
- Versatile installation applications
- Higher return on investment
- Allows for installation on small and confined sites
- Minimizes vector, bacteria and odor problems
- Allows user to target specific pollutants

Innovative stormwater management products

FloGard® +PLUS

Catch Basin Insert Filter

KRISTAR

INSTALLATION AND MAINTENANCE

Filter shall be installed and maintained in accordance with manufacturer's general instructions and recommendations.

PERFORMANCE

Filter shall provide 80% removal of total suspended solids (TSS) from treated flow with a particle size distribution consistent with typical urban street deposited sediments. Filter shall capture at least 70% of oil and grease and 40% of total phosphorus (TP) associated with organic debris from treated flow. Unit shall provide for isolation of trapped pollutants, including debris, sediments, and floatable trash and hydrocarbons, from bypass flow such that re-suspension and loss of pollutants is minimized during peak flow events.

FloGard®+PLUS COMPETITIVE FEATURE COMPARISON

Evaluation of FloGard+PLUS Units (Based on flow-comparable units) (Scale 1-10, 10 being best)	**FloGard+PLUS**	**Other Insert Filter Types****
Flow Rate	10	7
Removal Efficiency*	80%	45%
Capacity – Sludge and Oil	7	7
Service Life	10	3
Installation – Ease of Handling / Installation	8	6
Ease of Inspections & Maintenance	7	7
Value	**10**	**2**

*approximate, based on field sediment removal testing in urban street application **average

Long-Term Cost Comparison (Scale 1-10, 10 being lowest cost, higher number being best)	**FloGard+PLUS**	**Other Insert Filter Types**
Unit cost — initial ($/cfs treated)	10	4
Installation cost ($/cfs treated)	9	6
Adsorbent replacement (annual avg $/cfs treated)	10	2
Unit materials replacement (annual avg $/cfs treated)	10	10
Maintenance cost (annual avg $/cfs treated)	9	6
Total first yr ($/cfs treated)	10	5
Total Annual Avg ($/cfs treated, avg over 20 yrs)*	**10**	**5**

*assumes 3% annual inflation

Captured debris from
FloGard+PLUS,
Dana Point, CA

FloGard+PLUS
Combination Inlet

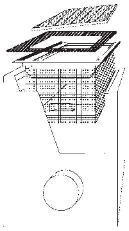

FloGard+PLUS
Flat Grate

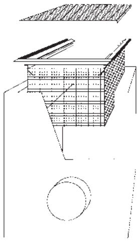

FloGard+PLUS
Round Gated Inlet

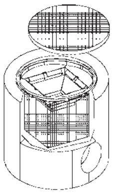

KriStar Enterprises, Inc.
P.O. Box 6419
Santa Rosa, CA 95406-1419

PH: 800-579-8819
FAX: 707-524-8186
www.kristar.com

FGP-T 11.19.18.04.2M

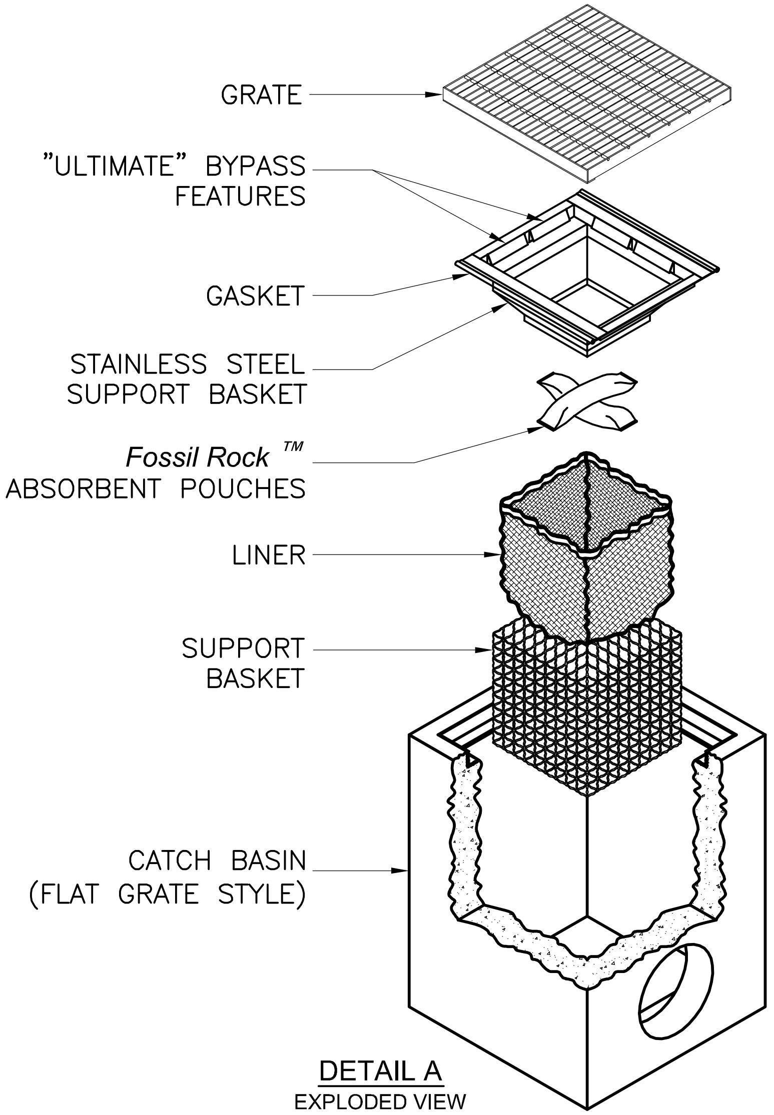

DETAIL A
EXPLODED VIEW

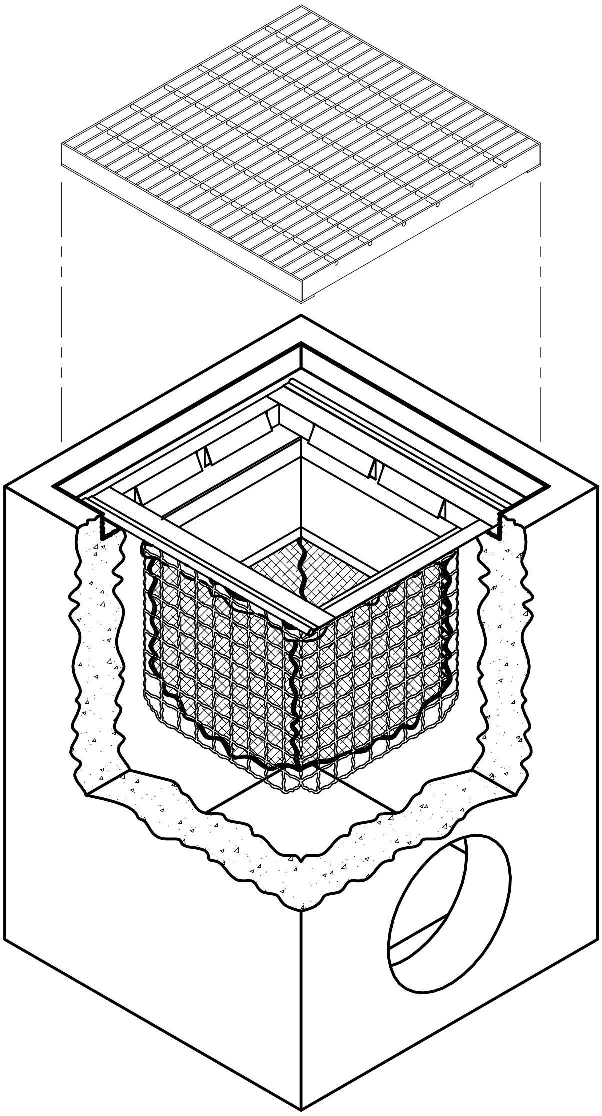

FLOGARD+PLUS® FILTER
-INSTALLED INTO CATCH BASIN-

NOTES:

1. FloGard®+Plus (frame mount) high capacity catch basin inserts are available in most sizes and styles (see specifier chart, sheet 2 of 2). Refer to the FloGard®+Plus (wall mount) insert for devices to fit non-standard, or combination style catch basins.

2. Filter insert shall have both an "initial" filtering bypass and "ultimate" high flow bypass feature.

3. Filter support frame shall be constructed from stainless steel Type 304.

4. Allow a minimum of 2.0 feet, of clearance between the bottom of the grate and top of outlet pipe(s), or refer to the FloGard® insert for "shallow" installations.

5. Filter medium shall be *Fossil Rock* ™, installed and maintained in accordance with manufacturer specifications.

6. Storage capacity reflects 80% of maximum solids collection prior to impeding filtering bypass.

7. Filtered flow r\rate includes a safety factor of two.

U.S. PATENT # 6,00,023 & 6,877,029

TITLE

FloGard® +PLUS
CATCH BASIN FILTER INSERT
(Frame Mount)
FLAT GRATED INLET

KriStar Enterprises, Inc.
P.O. Box 6419, Santa Rosa, CA 95406
Ph: 800.579.8819, Fax: 707.524.8186, www.kristar.com

DRAWING NO.	REV	ECO	DATE	
FGP-0001	A	0001	JPR 09/01/06	SHEET 1 OF 2

FGP-0001

U.S. PATENT # 6,00,023 & 6,877,029

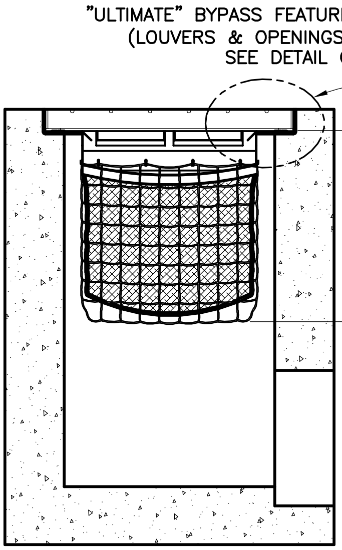

DETAIL B
SECTION VIEW
FLO-GARD® +FILTER
-INSTALLED-

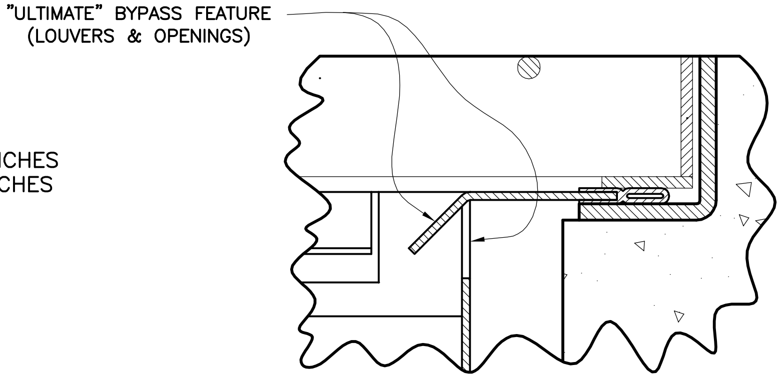

DETAIL C
"ULTIMATE"
BYPASS FEATURES

* MANY OTHER STANDARD & CUSTOM SIZES & DEPTHS AVAILABLE UPON REQUEST.

SPECIFIER CHART

MODEL NO. STANDARD DEPTH	STANDARD & SHALLOW DEPTH (Data in these columes is the same for both STANDARD & SHALLOW versions)			STANDARD DEPTH -20 Inches-		MODEL NO. SHALLOW DEPTH	SHALLOW DEPTH -12 Inches-	
	INLET ID Inside Dimension (inch x inch)	GRATE OD Outside Dimension (inch x inch)	TOTAL BYPASS CAPACITY (cu. ft.)	SOLIDS STORAGE CAPACITY (cu. ft.)	FILTERED FLOW (cu. ft. / sec.)		SOLIDS STORAGE CAPACITY (cu. ft.)	FILTERED FLOW (cu. ft. / sec.)
FGP-12F	12 X 12	12 X 14	2.8	0.3	0.4	FGP-12F8	.15	.25
FGP-1530F	15 X 30	15 X 35	6.9	2.3	1.6	FGP-1530F8	1.3	.9
FGP-16F	16 X 16	16 X 19	4.7	0.8	0.7	FGP-16F8	.45	.4
FGP-1624F	16 X 24	16 X 26	5.0	1.5	1.2	FGP-1624F8	.85	.7
FGP-18F	18 X 18	18 X 20	4.7	0.8	0.7	FGP-18F8	.45	.4
FGP-1820F	16 X 19	18 X 21	5.9	2.1	1.4	FGP-1820F8	1.2	.8
FGP-1824F	16 X 22	18 X 24	5.0	1.5	1.2	FGP-1824F8	.85	.7
FGP-1836F	18 X 36	18 X 40	6.9	2.3	1.6	FGP-1836F8	1.3	.9
FGP-2024F	18 X 22	20 X 24	5.9	1.2	1.0	FGP-2024F8	.7	.55
FGP-21F	22 X 22	22 X 24	6.1	2.2	1.5	FGP-21F8	1.25	.85
FGP-2142F	21 X 40	24 X 40	9.1	4.3	2.4	FGP-2142F8	2.45	1.35
FGP-2148F	19 X 46	22 X 48	9.8	4.7	2.6	FGP-2148F8	2.7	1.5
FGP-24F	24 X 24	24 X 27	6.1	2.2	1.5	FGP-24F8	1.25	.85
FGP-2430F	24 X 30	26 X 30	7.0	2.8	1.8	FGP-2430F8	1.6	1.05
FGP-2436F	24 X 36	24 X 40	8.0	3.4	2.0	FGP-2436F8	1.95	1.15
FGP-2448F	24 X 48	26 X 48	9.3	4.4	2.4	FGP-2448F8	2.5	1.35
FGP-28F	28 X 28	32 X 32	6.3	2.2	1.5	FGP-28F8	1.25	.85
FGP-2440F	24 X 36	28 X 40	8.3	4.2	2.3	FGP-2440F8	2.4	1.3
FGP-30F	30 X 30	30 X 34	8.1	3.6	2.0	FGP-30F8	2.05	1.15
FGP-36F	36 X 36	36 X 40	9.1	4.6	2.4	FGP-36F8	2.65	1.35
FGP-3648F	36 X 48	40 X 48	11.5	6.8	3.2	FGP-3648F8	3.9	1.85
FGP-48F	48 X 48	48 X 54	13.2	9.5	3.9	FGP-48F8	5.45	2.25
FGP-SD24F	24 X 24	28 X 28	6.1	2.2	1.5	FGP-SD24F8	1.25	.85
FGP-1836FGO	18 X 36	20 X 40	6.9	2.3	1.6	FGP-1836F8GO	1.3	.9
FGP-2436FGO	20 X 36	24 X 40	8.0	3.4	2.0	FGP-2436F8GO	1.95	1.15
FGP-48FGO	18 X 48	20 X 54	6.3	2.2	1.5	FGP-48F8GO	1.25	.85

TITLE

FloGard® +PLUS
CATCH BASIN FILTER INSERT
(Frame Mount)
FLAT GRATED INLET

KriStar Enterprises, Inc.
P.O. Box 6419, Santa Rosa, CA 95406
Ph: 800.579.8819, Fax: 707.524.8186, www.kristar.com

DRAWING NO.	REV	ECO	DATE	
FGP-0001	A	0001	JPR 09/01/06	SHEET 2 OF 2

FGP-0002

SPECIFIER CHART

MODEL NO.	Curb Opening Width - W -	Storage Capacity - Cu. Ft. -	Filtered Flow Rate - GPM/CFS -	Bypass Flow Rate - GPM/CFS -
FGP-24CI	2.0' (24")	.95	338 / .75	2,513 / 5.6
FGP-30CI	2.5' (30")	1.20	450 / 1.00	3,008 / 6.7
FGP-36CI	3.0' (36")	1.50	563 / 1.25	3,547 / 7.9
FGP-42CI	3.5' (42")	1.80	675 / 1.50	3,951 / 8.8
FGP-48CI	4.0' (48")	2.10	768 / 1.76	4,445 / 9.9
FGP-5.0CI	5.0' (60")	2.40	900 / 2.00	5,208 / 11.6
FGP-6.0CI	6.0' (72")	3.05	1,126 / 2.51	6,196 / 13.8
FGP-7.0CI	7.0' (84")	3.65	1,350 / 3.01	7,139 / 15.9
FGP-8.0CI	8.0' (96")	4.25	1,576 / 3.51	8,082 / 18.0
FGP-10.0CI	10.0' (120")	4.85	1,800 / 4.01	9,833 / 21.9
FGP-12.0CI	12.0' (144")	6.10	2,252 / 5.02	11,764 / 26.2
FGP-14.0CI	14.0' (168")	7.30	2,700 / 6.02	13,515 / 30.1
FGP-16.0CI	16.0' (192")	8.55	3.152 / 7.02	15,446 / 34.4
FGP-18.0CI	18.0' (216")	9.45	3,490 / 7.78	17,152 / 38.2
FGP-21.0CI	21.0' (252")	10.95	4,050 / 9.02	19,891 / 44.3
FGP-28.0CI	28.0 (336")	14.60	5,400 / 12.03	26,311 / 58.6

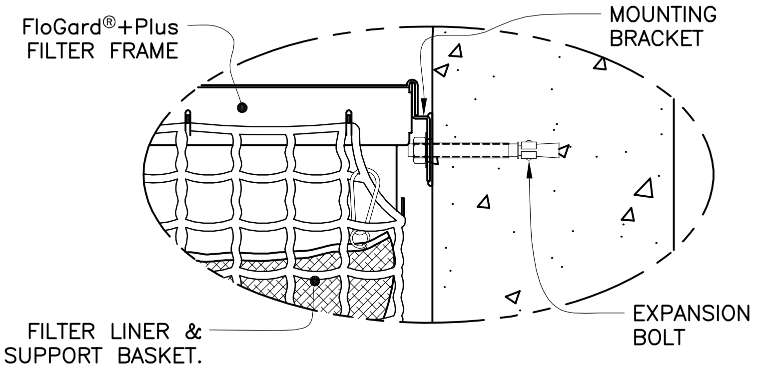

DETAIL A
MOUNTING BRACKET & EXPANSION BOLTS
SEE NOTE 2
SCALE 6/1

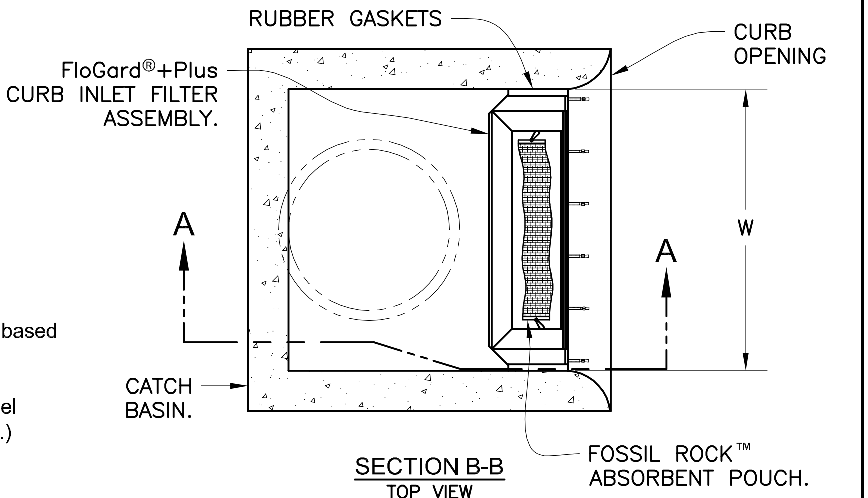

SECTION B-B
TOP VIEW
SCALE 1/1

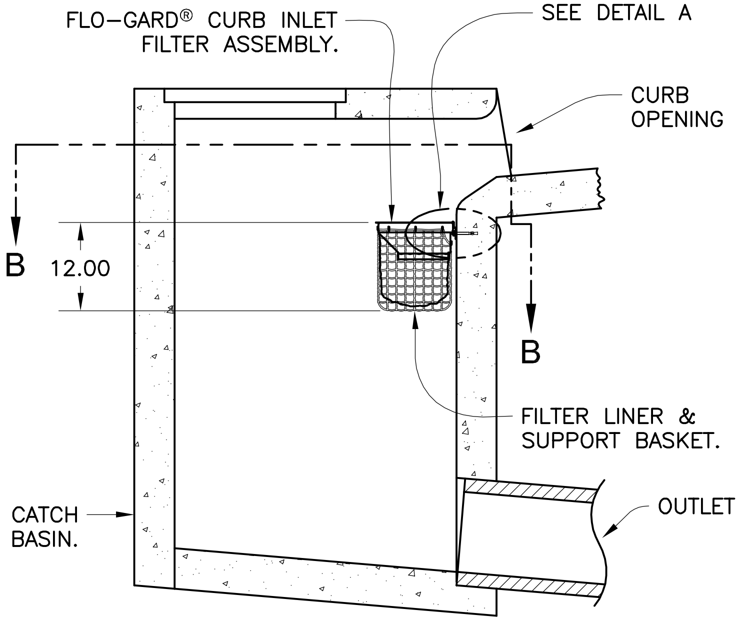

SECTION A-A
SIDE VIEW
SCALE 1/1

NOTES:

1. FloGard®+PLUS filter inserts shall be installed across the entire width of curb opening. Storage capacity and clean flow rates are based on full width installation.
2. Filter insert shall be attached to the catch basin with stainless steel expansion anchor bolts & washers (3/8" x 2-1/2" minimum length.) See detail A.
3. FloGard®+PLUS filter inserts are designed with a debris trap/energy dissipator for the retention of floatables and collected sediments .
4. Filter support frame shall be constructed from stainless steel Type 304.
5. Filter liner shall be constructed from durable polypropylene, woven, monofilament, geotextile. Filter liner shall not allow the retention of water between storm events.
6. Filter inserts are supplied with "clip-in" filter pouches utilizing FOSSIL ROCK™ filter medium for the collection and retention of petroleum hydrocarbons (oils & greases).
7. FloGard®+PLUS filter inserts and FOSSIL ROCK ™ filter medium pouches must be maintained in accordance with manufacturer recommendations.
8. FloGard +PLUS filter inserts are available in standard lengths of 24", 30",35", 42" & 48" and may be installed in various length combinations (end to end) to fit length of noted catch basin.
9. Clean flow rates are "calculated" based on liner flow rate of 140 gallons per minute per square foot of material, a factor of .50 has been applied to allow for anticipated sediment & debris loading. An additional safety factor of between .25 & .50 may be applied to allow for site specific sediment loading.
10. Storage capacity reflects maximum solids collection prior to impending "initial" filtering bypass. The "ultimate" high-flow bypass will not become impeded due to maximum solids loading.

TITLE

FloGard® +PLUS
CATCH BASIN FILTER INSERT
(Curb Inlet Style)

KriStar Enterprises, Inc.
360 Sutton Place, Santa Rosa, CA 95407
Ph: 800.579.8819, Fax: 707.524.8186, www.kristar.com

DRAWING NO.	REV	ECO	DATE	
FGP-0002	D	0059 JPR 12/30/08	JPR 11/3/06	SHEET 1 OF 1

KRISTAR

DRAINAGE PROTECTION SYSTEMS
DPS

GENERAL SPECIFICATIONS FOR MAINTENANCE OF *FLO-GARD+PLUS®* CATCH BASIN INSERT FILTERS

SCOPE:

Federal, State and Local Clean Water Act regulations and those of insurance carriers require that stormwater filtration systems be maintained and serviced on a recurring basis. The intent of the regulations is to ensure that the systems, on a continuing basis, efficiently remove pollutants from stormwater runoff thereby preventing pollution of the nation's water resources. These specifications apply to the FloGard+Plus® Catch Basin Insert Filter.

RECOMMENDED FREQUENCY OF SERVICE:

Drainage Protection Systems (DPS) recommends that installed Flo-Gard+Plus® Catch Basin Insert Filters be serviced on a recurring basis. Ultimately, the frequency depends on the amount of runoff, pollutant loading and interference from debris (leaves, vegetation, cans, paper, etc.); however, it is recommended that each installation be serviced a minimum of three times per year, with a change of filter medium once per year. DPS technicians are available to do an on-site evaluation, upon request.

RECOMMENDED TIMING OF SERVICE:

DPS guidelines for the timing of service are as follows:

1. For areas with a definite rainy season: Prior to, during and following the rainy season.
2. For areas subject to year-round rainfall: On a recurring basis (at least three times per year).
3. For areas with winter snow and summer rain: Prior to and just after the snow season and during the summer rain season.
4. For installed devices not subject to the elements (washracks, parking garages, etc.): On a recurring basis (no less than three times per years).

SERVICE PROCEDURES:

1. The catch basin grate shall be removed and set to one side. The catch basin shall be visually inspected for defects and possible illegal dumping. If illegal dumping has occurred, the proper authorities and property owner representative shall be notified as soon as practicable.
2. Using an industrial vacuum, the collected materials shall be removed from the liner. (Note: DPS uses a truck-mounted vacuum for servicing Flo-Gard+Plus® catch basin inserts.)
3. When all of the collected materials have been removed, the filter medium pouches shall be removed by unsnapping the tether from the D-ring and set to one side. The filter liner, gaskets, stainless steel frame and mounting brackets, etc. shall be inspected for continued serviceability. Minor damage or defects found shall be corrected on-the-spot and a notation made on the Maintenance Record. More extensive deficiencies that affect the efficiency of the filter (torn liner, etc.), if approved by the customer representative, will be corrected and an invoice submitted to the representative along with the Maintenance Record.
4. The filter medium pouches shall be inspected for defects and continued serviceability and replaced as necessary and the pouch tethers re-attached to the liner's D-ring. See below.
5. The grate shall be replaced.

REPLACEMENT AND DISPOSAL OF EXPOSED FILTER MEDIUM AND COLLECTED DEBRIS

The frequency of filter medium pouch exchange will be in accordance with the existing DPS-Customer Maintenance Contract. DPS recommends that the medium be changed at least once per year. During the appropriate service, or if so determined by the service technician during a non-scheduled service, the filter medium pouches will be replaced with new pouches. Once the exposed pouches and debris have been removed, DPS has possession and must dispose of it in accordance with local, state and federal agency requirements.

DPS also has the capability of servicing all manner of catch basin inserts and catch basins without inserts, underground oil/water separators, stormwater interceptors and other such devices. All DPS personnel are highly qualified technicians and are confined space trained and certified. Call us at (888) 950-8826 for further information and assistance.

APPENDIX G

Record of BMP Implementation, Maintenance and Inspection

RECORD OF BMP IMPLEMENTATION, MAINTENANCE AND INSPECTION

Today's Date: ______________________

Name of Person Performing Activity (Printed): ______________________

Signature: ______________________

BMP Name (As Shown in O&M Plan)	Brief Description of Implementation, Maintenance, and Inspection Activity Performed

APPENDIX H

Water Quality Management Plan and Stormwater BMP Transfer, Access and Maintenance Agreement

AND WHEN RECORDED MAIL TO

City Clerk
City of Redlands
35 Cajon Street
Redlands, CA 92373

SPACE ABOVE THIS LINE FOR RECORDER'S USE

WATER QUALITY MANAGEMENT PLAN AND STORMWATER BMP TRANSFER, ACCESS AND MAINTENANCE AGREEMENT

CITY OF REDLANDS, COUNTY OF SAN BERNARDINO, STATE OF CALIFORNIA

This Agreement is made and entered into this _____ day of ____________, 20__, by and between the CITY OF REDLANDS, a municipal corporation, hereinafter referred to as CITY, and _**Soni 2012 Irrevocable Trusts**_____, hereinafter referred to as OWNER.

WHEREAS, the Owner is the legal property owner of the real property situated in the State of California, County of San Bernardino, located at **the NW Corner of E. Colton Avenue and Wabash Avenue**___ in the City of Redlands, more commonly referred to as San Bernardino County Tax Assessor Parcel No. **0168-291-02-0-000**__described in Exhibit A and depicted in Exhibit B attached hereto and incorporated herein by this reference; and

WHEREAS, at the time of initial approval of the development project known as the **Madera at Citrus Trail Residential Project** within the Property described herein, the City required the project to employ Best Management Practices, hereinafter referred to as "BMPs," to minimize pollutants in urban runoff; and

WHEREAS, the Owner has chosen to install and/or implement BMPs as described in the Water Quality Management Plan, on file with the City, hereinafter referred to as "WQMP," to minimize pollutants in urban runoff and to minimize other adverse impacts of urban runoff; and

WHEREAS, said WQMP has been certified by the Owner and reviewed and approved by the City; and

WHEREAS, said BMPs, with installation and/or implementation on private property and draining only private property, are part of a private facility with all maintenance or replacement therefore, the sole responsibility of the Owner in accordance with the terms of this Agreement;

WHEREAS, the Owner is aware that periodic and continuous maintenance, including, but not necessarily limited to, filter material replacement and sediment removal, is required to assure peak performance of all BMPs in the WQMP and that, furthermore, such maintenance activity will require compliance with all Local, State, or Federal laws and regulations, including those pertaining to confined space and waste disposal methods, in effect at the time such maintenance occurs;

NOW THEREFORE, it is mutually stipulated and agreed as follows:

1. The Owner hereby provides the City or the City's designee complete access, of any duration, to the BMPs and their immediate vicinity at any time, upon reasonable notice, or in the event of emergency, as determined by City's Director of Public Works with no advance notice, for the purpose of inspection, sampling, testing of the BMPs, and in case of emergency, to undertake all necessary repairs or other preventative measures at the owner's expense as provided in paragraph 3 below. The City shall make every effort at all times to minimize or avoid interference with the Owner's use of the Property.

2. The Owner shall use its best efforts diligently to maintain all BMPs in a manner assuring peak performance at all times. All reasonable precautions shall be exercised by the Owner and the Owner's representative or contractor in the removal and extraction of any material(s) from the BMPs and the ultimate disposal of the material(s) in a manner consistent with all relevant laws and regulations in effect at the time. As may be requested from time to time by the City, the Owner shall provide the City with documentation identifying the material(s) removed, the quantity, and disposal destination.

3. In the event the Owner, or its successors or assigns, fails to accomplish the necessary maintenance contemplated by this Agreement, within five (5) days of being given written notice by the City, the City is hereby authorized to cause any maintenance necessary to be done and charge the entire cost and expense to the Owner or the Owner's successors or assigns, including administrative costs, attorneys fees and interest thereon at the maximum rate authorized by the Civil Code from the date of the notice of expense until paid in full.

4. The City may require the Owner to post security in form and for a time period satisfactory to the City to guarantee the performance of the obligations stated herein. Should the Owner fail to perform the obligations under this Agreement, the City may, in the case of a cash bond, act for the Owner using the proceeds from it, or in the case of a surety bond, require the sureties to perform the obligations of this Agreement. As an additional remedy, the Director may withdraw any previous stormwater-related approval with respect to the property on which BMPs have been installed and/or implemented until such time as the Owner repays to the City its reasonable costs incurred in accordance with paragraph 3 above.

5. This Agreement shall be recorded in the Office of the Recorder of San Bernardino County, California, at the expense of the Owner and shall constitute notice to all successors and assigns of the title to said Property of the obligation herein set forth, and also a lien in such amount as will fully reimburse the City, including interest as herein above set forth, subject to foreclosure in event of default in payment.

6. In event of legal action occasioned by any default or action of the Owner, or its successors or assigns, then the Owner and its successors or assigns agree(s) to pay all costs incurred by the City in enforcing the terms of this Agreement, including reasonable attorney's fees and costs, and that the same shall become a part of the lien against said Property.

7. It is the intent of the parties hereto that burdens and benefits herein undertaken shall constitute covenants that run with said Property and constitute a lien against the Property.

8. The obligations herein undertaken shall be binding upon the heirs, successors, executors, administrators and assigns of the parties hereto. The term "Owner" shall include not only the present Owner, but also its heirs, successors, executors, administrators, and assigns. The Owner shall notify any successor to title of all or part of the Property about the existence of this Agreement. The Owner shall provide such notice prior to such successor obtaining an interest in all or part of the Property. The Owner shall provide a copy of such notice to the City at the same time such notice is provided to the successor.

9. Time is of the essence in the performance of this Agreement.

10. Any notice to a party required or called for in this Agreement shall be served in person, or by deposit in the U.S. Mail, first class postage prepaid, to the address set forth below. Notice(s) shall be deemed effective upon receipt, or seventy-two (72) hours after deposit in the U.S. Mail, whichever is earlier. A party may change a notice address only by providing written notice thereof to the other party.

IF TO CITY:	IF TO OWNER:
______________________________	Vanita Soni Puri
Director of Public Works	Authorized Signatory
35 Cajon Street	1423 Georgina Avenue
Redlands, CA 92373	Santa Monica, CA 90402

IN WITNESS THEREOF, the parties hereto have affixed their signatures as of the date first written above.

APPROVED AS TO FORM;

By: (Signature Not Required)
City Attorney

APPROVED AS TO CONTENT:

By: ______________________________
Director of Public Works
City of Redlands

City of Redlands

By: ______________________________

City Manager

ATTEST:

____

City Clerk

Owner: Soni 2012 Irrevocable Trusts
(Company)

By: ______________________________
(Signature and Date)

Name: Vanita Soni Puri
(Please Print or Type Name)

Title: Authorized Signatory
(Please Print or Type Title)

NOTE: OWNER'S SIGNATURE MUST BE NOTARIZED FOR RECORDATION

EXHIBIT A

LEGAL DESCRIPTION

REAL PROPERTY IN THE CITY OF REDLANDS, COUNTY OF SAN BERNARDINO, STATE OF CALIFORNIA, DESCRIBED AS FOLLOWS:

THAT PORTION OF THE SOUTHEAST QUARTER OF SECTION 24, TOWNSHIP 1 SOUTH, RANGE 3 WEST, SAN BERNARDINO BASE AND MERIDIAN, IN THE CITY OF REDLANDS, ACCORDING TO THE OFFICIAL GOVERNMENT PLAT THEREOF, DESCRIBED AS FOLLOWS:

BEGINNING AT AN IRON PIPE IN MIDDLE LINE OF WABASH (FORMERLY EMERALD) AVENUE, DISTANT SOUTH 0°17' EAST (MAGNETIC VARIATION 15° EAST) 1975.7 FEET FROM AN IRON ROD AT THE INTERSECTION OF MIDDLE LINE OF LUGONIA (FORMERLY MENTON) AND WABASH AVENUES;

THENCE FROM SAID POINT OF BEGINNING, RUNNING MIDWAY BETWEEN THE 38TH AND 39TH ORANGE TREE ROWS NORTH FROM COLTON
AVENUE, NORTH 89°45' WEST 655.7 FEET TO A 3 INCH STAKE;
THENCE SOUTH 0°25' EAST 702.7 FEET TO AN IRON ROD IN THE MIDDLE LINE OF COLTON AVENUE;
THENCE ALONG THE MIDDLE LINE OF SAID COLTON AVENUE NORTH 89°51' EAST 654.3 FEET TO A WOODEN STAKE AT INTERSECTION OF MIDDLE LINES OF WABASH AVENUE (FROM THE NORTH) AND COLTON AVENUE, SAID WOODEN STAKE BEING 35.15 FEET EAST OF STONE AT THE INTERSECTION OF THE MIDDLE LINES OF WABASH AVENUE (FROM THE SOUTH) AND COLTON AVENUE;
THENCE ALONG THE MIDDLE LINE OF SAID WABASH AVENUE NORTH 0°17' WEST 698 FEET TO THE PLACE OF BEGINNING;

EXCEPTING THERE FROM THE LAND NOW OCCUPIED BY THE CALIFORNIA CENTRAL RAILWAY COMPANY, ACROSS THE SOUTHEAST CORNER THEREOF; AS GRANTED BY DEED RECORDED MARCH 20, 1888 IN BOOK 69, PAGE(S) 553 OF DEEDS;

ALSO EXCEPTING THERE FROM ANY PORTION THEREOF DESCRIBED IN CONVEYANCE EXECUTED BY THE ATCHISON, TOPEKA AND SANTA FE RAILWAY COMPANY, A DELAWARE CORPORATION, SUCCESSOR IN INTEREST TO THE CALIFORNIA CENTRAL RAILWAY COMPANY, IN FAVOR OF SAN BERNARDINO ASSOCIATED GOVERNMENTS, A COUNTY TRANSPORTATION COMMISSION AND LOCAL TRANSPORTATION AUTHORITY, RECORDED MARCH 30, 1993 AS INSTRUMENT NO. 93- 137041 AND MARCH 30, 1993 AS INSTRUMENT NO. 93-137043, BOTH OF OFFICIAL RECORDS;

ALSO EXCEPTING THERE FROM THAT PORTION OF LAND CONVEYED IN GRANT DEED EXECUTED BY VINEY SONI AND VANDANA SONI, TRUSTEES OF THE SONI REVOCABLE INTER-VIVOS TRUST, DATED MARCH 27, 1984, IN FAVOR OF CITY OF REDLANDS, A MUNICIPAL CORPORATION, RECORDED JUNE 7, 1999 AS INSTRUMENT NO. 99-240498 OF OFFICIAL RECORDS.

APN: 0168-291-02-0-000

EXHIBIT B

BMP SITE PLAN

BMP LEGEND

▬	DRAINAGE AREAS **DA 1**
→	SURFACE FLOW DIRECTION
→	STORM DRAIN FLOW DIRECTION
▨	UNDERGROUND INFILTRATION PIPE PER DETAIL HEREON
🟩	LANDSCAPE AREA EFFICIENT IRRIGATION LANDSCAPE AREA RUNOFF–MINIMIZING DESIGN
🟥	PROPOSED BUILDING
▨	ASPHALT CONCRETE DRIVE AISLES
▨	CONCRETE DRIVEWAY APPROACH
■	CATCH BASIN WITH INSERT FILTER & STORM DRAIN STENCIL SIGNAGE

PROJECT DATA:

TOTAL SITE AREA OF PROPOSED
DEVELOPMENT: 9.01 AC (392,503 SF)

BUILDING AREA: 122,630 SF
DRIVEWAYS / DRIVE AISLES / PARKING AREAS: 95,896 SF
WALKWAYS / CONC. HARDSCAPE: 95,476 SF

78,501 SF LANDSCAPING PROVIDED
(20.0% PERVIOUS AREA)

CURRENT USE: VACANT
PROPOSED USE: RESIDENTIAL

WATERSHED:
SANTA ANA RIVER

LID DCV CALCULATION

AREA 1

AREA – 8.73 AC (380,199 SF)
RUNOFF COEFFICIENT (80% IMPERVIOUS)
C = 0.858 * (0.80)^3 –0.78 * (0.80)^2 + 0.774 * (0.80) + .04 = 0.599
2YR 1 HR STORM – 0.491 IN
P6 = 1.4807 * 0.491 = 0.727 IN
DCV = 380,199 SF * 0.599 * 0.727 IN / 12IN/FT * 1.963 = 27,084 CF

BMP VOLUME CALCULATION

BMP VOLUME
PIPE CROSS SECTIONAL AREA – (50.26) * 2 CF/LF = 100.52 CF/LF
ROCK CROSS SECTIONAL AREA – 79.48 CF/LF ROCK AREA * .35 = 27.82 CF/LF
TOTAL CROSS SECTIONAL AREA – 128.34 CF/LF * 183 LF = 23,486 CF
EFFECTIVE DEPTH – 23,486 CF / 3,660 SF BOTTOM = 6.42'

Vret = (Pdesign/12 * SAinf * Tfill) + (SAres * Dres * Nagg)
Pdesign = 7.98" MEASURED / 2.00 S.F. = 3.99"/HR
SAinf = 3,660 SF
SAres = 3,660 SF
Tfill = 3 HRS
Dres = EFFECTIVE DEPTH = 6.42'
Nagg = 1.0 (EFFECTIVE DEPTH ACCOUNTED FOR ROCK)
Vret = (3.99/12 * 3,660 * 3) + (3,660 * 6.42 * 1)
Vret = 27,148 CF
BMP VOLUME (27,148 CF) > DCV VOLUME (27,084 CF)

EXISTING CN = 38 (AREA WEIGHTED)
PROPOSED CN = 84.8 (AREA WEIGHTED)
V_{HCOC}= VOLUME REDUCTION NEEDED TO MEET HCOC REQUIREMENTS
PRE–RV = PRE–DEVELOPED RUNOFF VOLUME = 2,615 CF
POST–RV = POST DEVELOPED RUNOFF VOLUME = 28,119 CF
V_{HCOC}= (POST–RV * 0.95) – PRE–RV = (28,199 CF * 0.95) – 2,615 CF
= 24,098 CF
BMP VOLUME (27,148 CF) > V_{HCOC} (24,098 CF)

LID DCV CALCULATION

AREA 2

AREA – 0.28 AC (12,304 SF)
RUNOFF COEFFICIENT (80% IMPERVIOUS)
C = 0.858 * (0.80)^3 –0.78 * (0.80)^2 + 0.774 * (0.80) + .04 = 0.599
2YR 1 HR STORM – 0.491 IN
P6 = 1.4807 * 0.594 = 0.727 IN
DCV = 12,304 SF * 0.599 * 0.727 IN / 12IN/FT * 1.963 = 876 CF

BMP VOLUME CALCULATION

BMP VOLUME
PIPE CROSS SECTIONAL AREA – (50.26) CF/LF
ROCK CROSS SECTIONAL AREA – 39.74 CF/LF ROCK AREA * .35 = 13.91 CF/LF
TOTAL CROSS SECTIONAL AREA – 64.17 CF/LF * 20 LF = 1,283 CF
EFFECTIVE DEPTH – 1,283 CF / 200 SF BOTTOM = 6.42'

Vret = (Pdesign/12 * SAinf * Tfill) + (SAres * Dres * Nagg)
Pdesign = 7.98" MEASURED / 2.00 S.F. = 3.99"/HR
SAinf = 200 SF
SAres = 200 SF
Tfill = 3 HRS
Dres = EFFECTIVE DEPTH = 6.42'
Nagg = 1.0 (EFFECTIVE DEPTH ACCOUNTED FOR ROCK)
Vret = (3.99/12 * 200 * 3) + (200 * 6.42 * 1)
Vret = 1,484 CF
BMP VOLUME (1,484 CF) > DCV VOLUME (876 CF)

EXISTING CN = 61 (AREA WEIGHTED)
PROPOSED CN = 89.6 (AREA WEIGHTED)
V_{HCOC}= VOLUME REDUCTION NEEDED TO MEET HCOC REQUIREMENTS
PRE–RV = PRE–DEVELOPED RUNOFF VOLUME = 105 CF
POST–RV = POST DEVELOPED RUNOFF VOLUME = 1,218 CF
V_{HCOC}= (POST–RV * 0.95) – PRE–RV = (1,218 CF * 0.95) – 105 CF
= 1,052 CF
BMP VOLUME (1,484 CF) > V_{HCOC} (1,052 CF)

STENCIL SAMPLE*

*THE STENCIL SHALL BE BLUE ON A WHITE BACKGROUND WITH LETTERING 2–1/2" IN HEIGHT AND READING "NO DUMPING –DRAINS TO RIVER". A FISH OR SIMILAR WATER DEPENDENT CREATURE SILHOUETTE MAY BE INCLUDED SUBJECT TO CITY APPROVAL. IN LIEU OF A STENCIL, A CATCH BASIN CURB MARKER, CIRCULAR OR RECTANGULAR, AT LEAST 4" IN HEIGHT OR DIAMETER, MAY BE USED. THE MESSAGE WILL BE THE SAME AND IS SUBJECT TO CITY APPROVAL. A PAINTED CIRCULAR STENCIL SHALL NOT BE BIGGER THAN 8"IN DIAMETER. LEGIBILITY WILL BE CHECKED AND REPAINTED ANNUALLY.

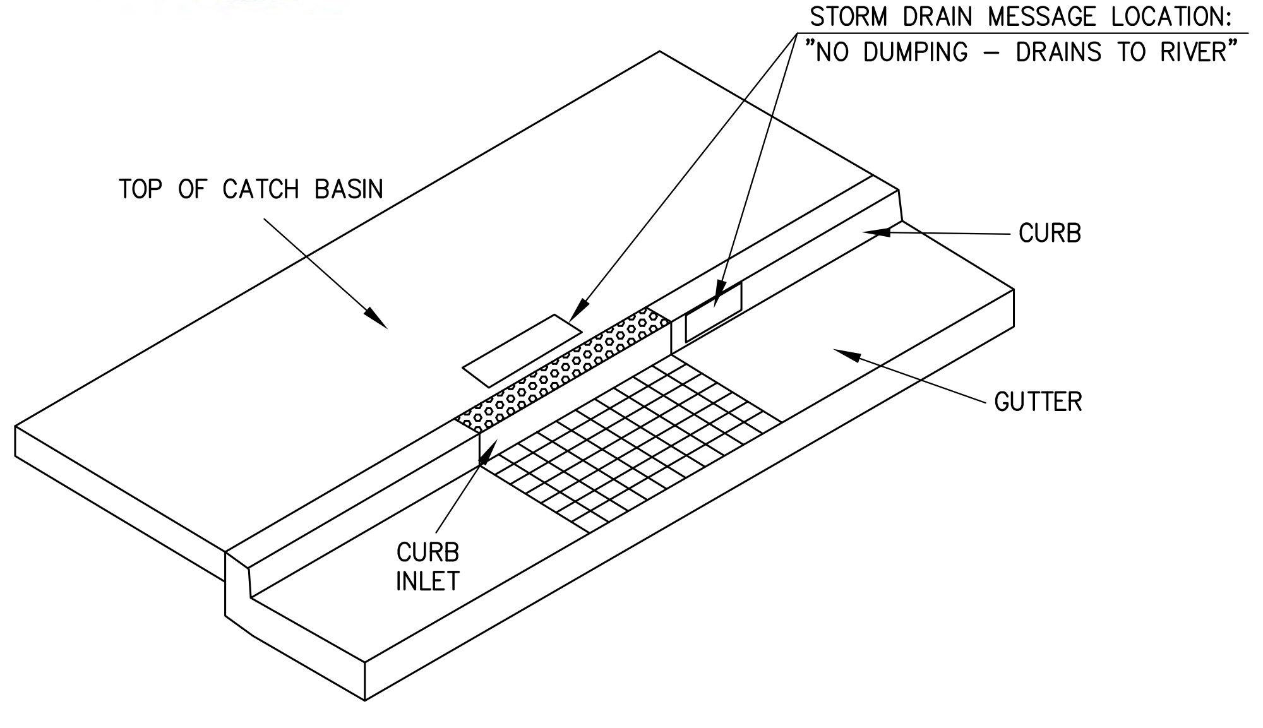

STORM DRAIN STENCIL SIGNAGE – CURB INLET

NTS

BMP LOCATIONS

AREA#1 – LATITUDE: 34.063951° / LONGITUDE: –117.140385°
AREA#2 – LATITUDE: 34.062953° / LONGITUDE: –117.140843°

FEASIBILITY CONSTRAINTS

THERE ARE NO FEASIBILITY CONSTRAINTS FOR INFILTRATION

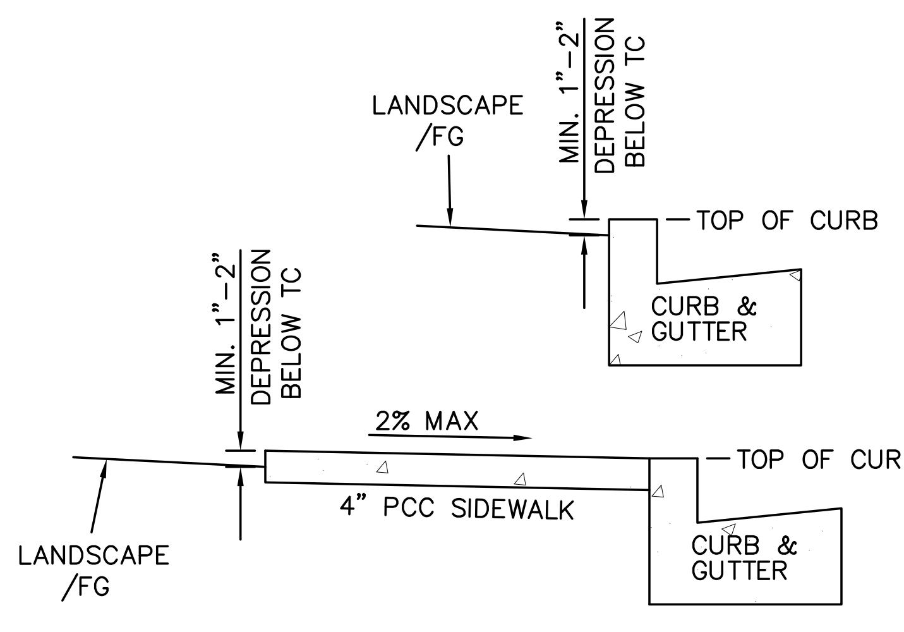

LANDSCAPE DEPRESSION DETAIL

SCALE: 1"=2'

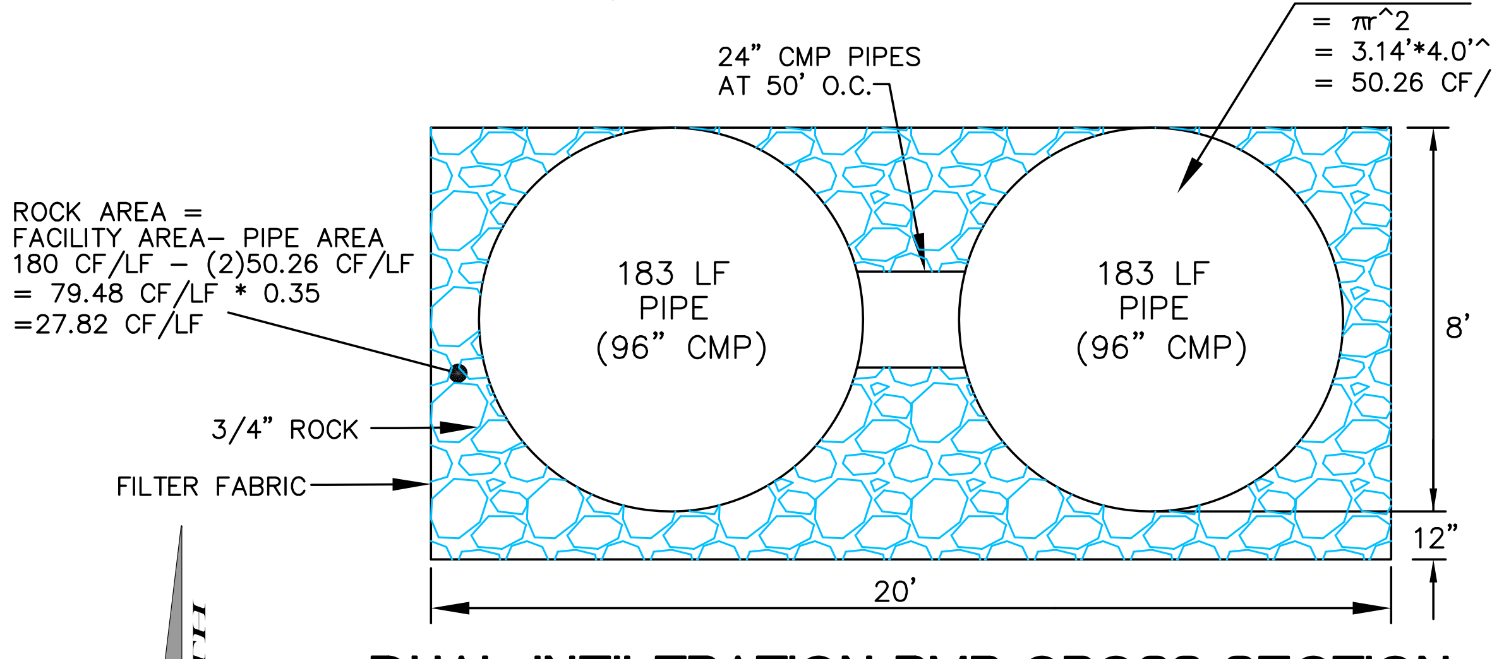

DUAL INFILTRATION BMP CROSS SECTION

SCALE: 1"=4'

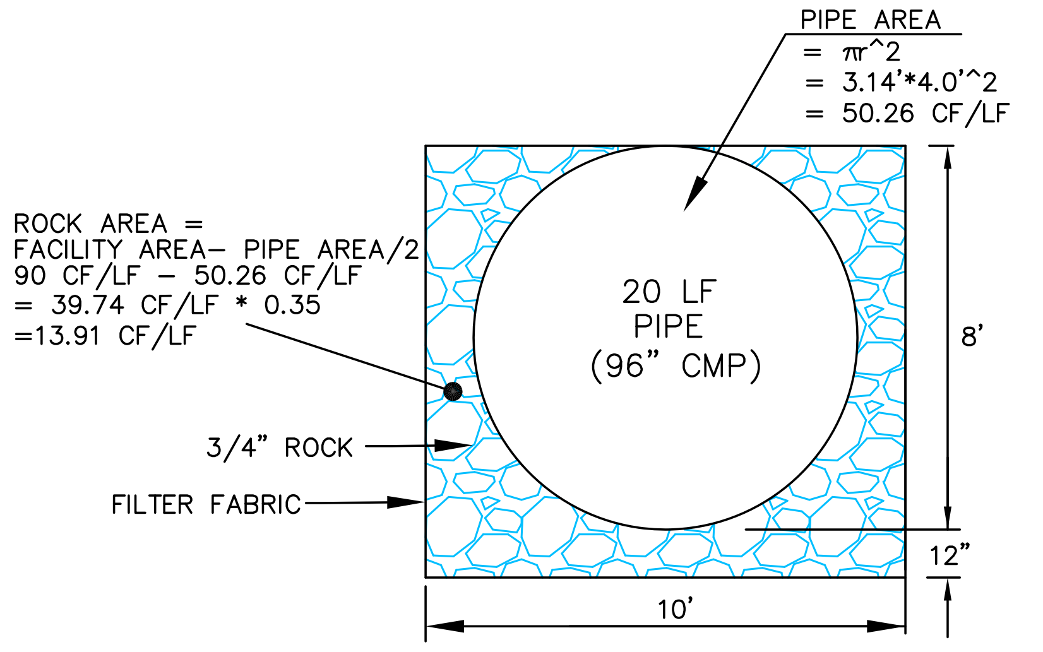

INFILTRATION BMP CROSS SECTION

SCALE: 1"=4'

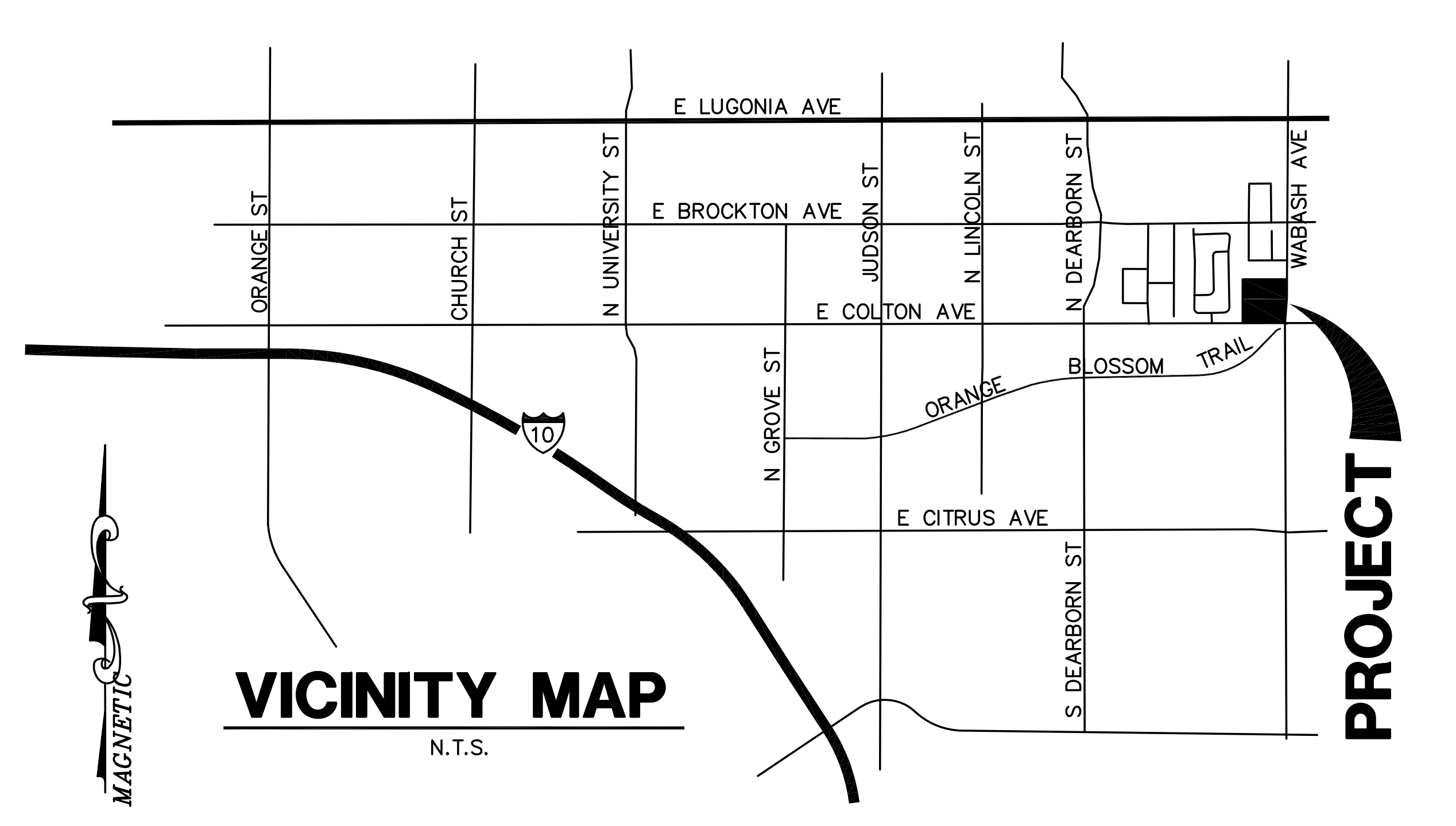

VICINITY MAP

N.T.S.

FloGard®

Catch Basin Insert Filter

Curb Inlet Style DRAWING NO. FGP-0002

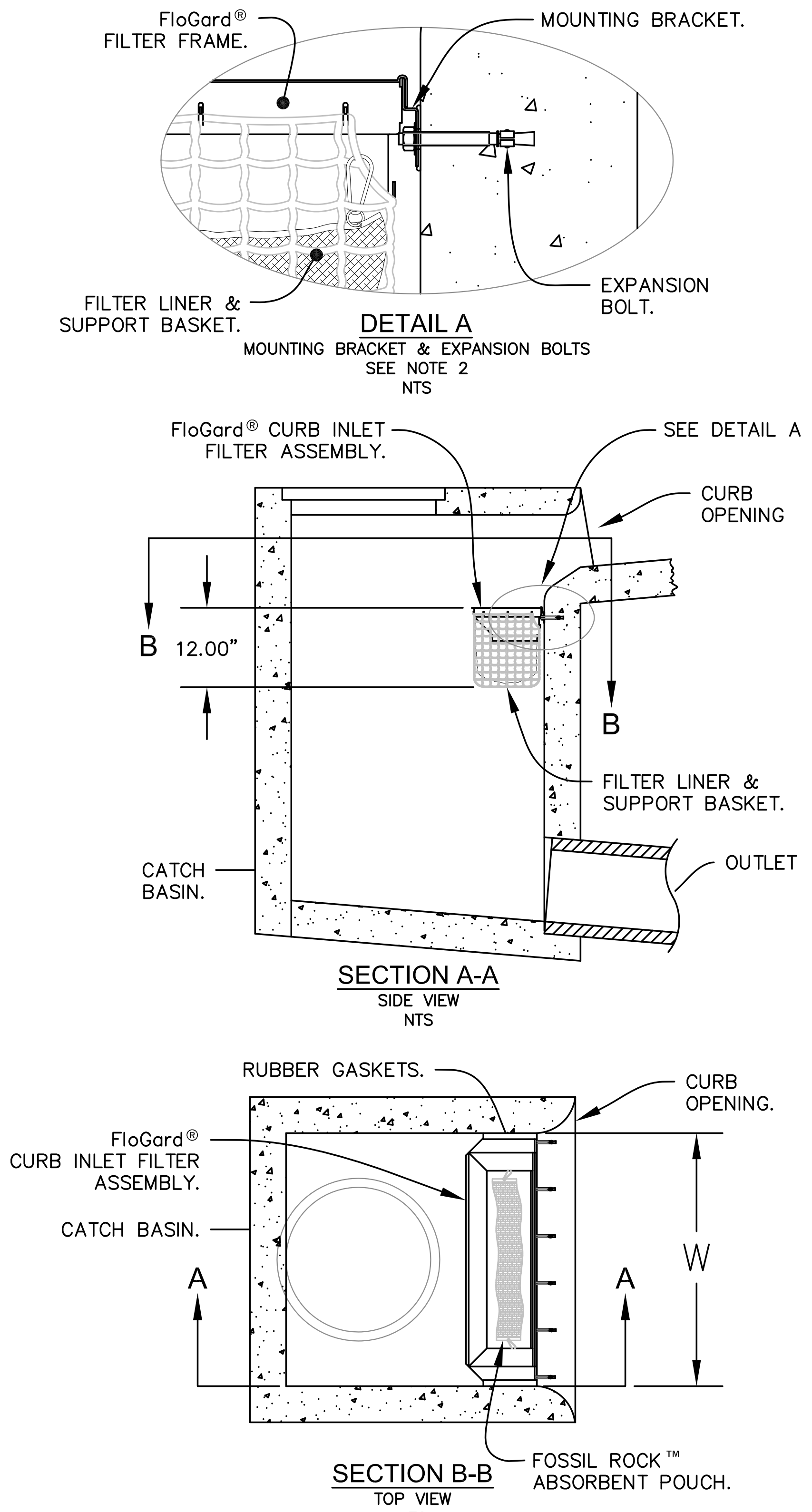

NOTES:

1. Filter insert shall have a high flow bypass feature.
2. Filter support frame shall be constructed from stainless steel Type 304.
3. Filter medium shall be Fossil Rock, installed and maintained in accordance with manufacturer specifications.
4. Storage capacity reflects 80% of maximum solids collection prior to impeding filtering bypass.

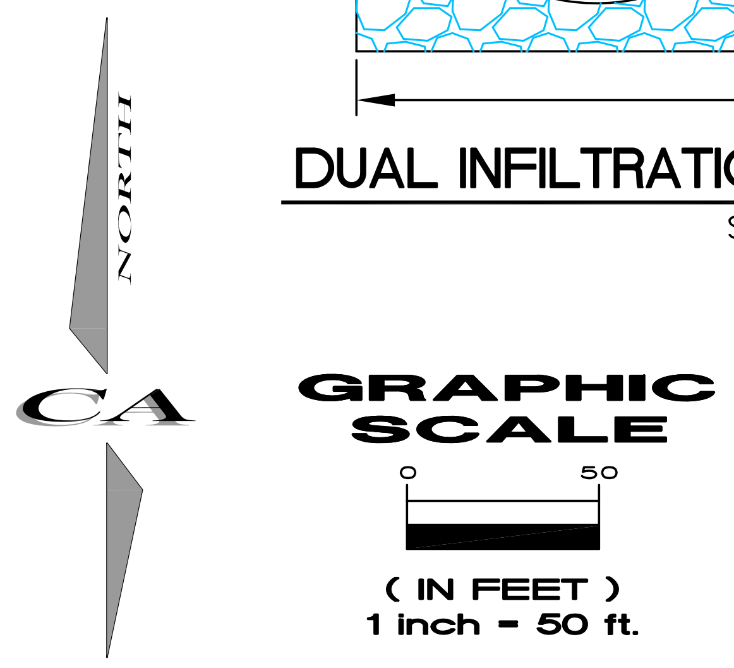

PRELIMINARY
WQMP SITE PLAN
COLTON AVE + WABASH AVE
REDLANDS, CA

Soni 2012 Irrevocable Trusts
1423 Georgina Avenue Santa Monica
Santa Monica, CA 90402
(949) 922–7075
Contact: Vanita Soni Puri

FRED CORNWELL No. 45591

FRED CORNWELL R.C.E. 45591 DATE

PREPARED BY:
CA ENGINEERING, INC.
Planning • Engineering • Surveying
13821 NEWPORT AVE., STE 110
TUSTIN, CA 92780
949-724-9480 949-724-9484 FAX

DATE	BY	REVISION

SHEET
C1.3

DATE
Oct 05 2022

JOB NO.
816–1

Sht. C–2

6.4 Other Supporting Documentation

- BMP Educational Materials
- Activity Restriction – C, C&R's & Lease Agreements

APPENDICES INCLUDED IN SECTION 6.4 (Other Supporting Documentation):

Appendix I: **Kristar FloGard +PLUS Catch Basin Insert Filter Specifications (Pretreatment for Infiltration)**

Appendix J: **BMP Fact Sheet— INF-7: Underground Infiltration Fact Sheet (from Orange County TGD for Project WQMPs)**

Appendix K: **BMP Educational Materials**

- **Commercial Landscape Maintenance Fact Sheet (San Bernardino County Stormwater Program Website)**
- **Stormwater Management Practices for Commercial Landscape Maintenance Brochure (San Bernardino County Stormwater Program Website)**
- **Sustainable Practices for Landscape Maintenance Brochure for Homeowners (San Bernardino County Stormwater Program Website)**
- **Construction & Development Fact Sheet (San Bernardino County Stormwater Program Website)**
- **Regulatory Information Fact Sheet (San Bernardino County Stormwater Program Website)**
- **Toxic Household Waste Brochure for Homeowners (San Bernardino County Stormwater Program Website)**
- **Pet Waste Brochure for Homeowners (San Bernardino County Stormwater Program Website)**
- **SC-35 Safer Alternative Products**
- **SC-41 Building & Grounds Maintenance**
- **SC-42 Building Repair and Construction**
- **SC-43 Parking / Storage Area Maintenance**
- **SC-44 Drainage System Maintenance**
- **SD-10 Site Design & Landscape Planning**

- **SD-12 Efficient Irrigation**
- **SD-13 Storm Drain Signage**

Appendix L: **NOAA Point Precipitation Frequency Estimate for 2 Year, 1 Hour Storm**

Appendix M: **TGR Geotechnical, Inc.'s Geotechnical Investigation Report, Northwest Corner of E. Colton Avenue and N. Wabash Avenue, Redlands, California 92374, APN 0168-291-02, dated April 8, 2022**

Appendix N: **Worksheet H: Factor of Safety and Design Infiltration Rate Worksheet (DA 1); Worksheet H: Factor of Safety and Design Infiltration Rate Worksheet (DA 2) (from Orange County TGD for Project WQMPs)**

Appendix O: **Preliminary Hydrology and Hydraulic Report for Madera at Citrus Trail Residential Project, NW Corner of E. Colton Avenue and Wabash Avenue, Redlands, California, 92374, dated July 13, 2022**

Appendix P: **Initial Time of Concentration Nomographs, San Bernardino County Hydrology Manual Figure D-1**

APPENDIX I

Kristar FloGard +PLUS Catch Basin Insert Filter Specifications

(Pretreatment for Infiltration)

Innovative stormwater management products

KriStar

FloGard®
+PLUS
Catch Basin Insert Filter

FloGard®+PLUS Catch Basin Insert Filter

GENERAL FILTER CONFIGURATION

FloGard®+PLUS catch basin insert filter shall provide solids filtration through a filter screen or filter liner, and hydrocarbon capture shall be effected using a non-leaching absorbent material contained in a pouch or similar removable restraint. Hydrocarbon absorbent shall not be placed at an exposed location at the entry to the filter that would allow blinding by debris and sediment without provision for self-cleaning in operation.

Filter shall conform to the dimensions of the inlet in which it is applied, allow removal and replacement of all internal components, and allow complete inspection and cleaning in the field.

FLOW CAPACITY

Filter shall provide two internal high-flow bypass locations that in total exceed the inlet peak flow capacity. Filter shall provide filtered flow capacity in excess of the required "first flush" treatment flow. Unit shall not impede flow into or through the catch basin when properly sized and installed.

MATERIALS

Filter support frame shall be constructed of type 304 stainless steel. Filter screen, when used in place of filter liner, shall be type 304 or 316 stainless steel, with an apparent opening size of not less than 4 U.S. mesh. Filter liner, when used in place of filter screen, shall be woven polypropylene geotextile fabric liner with an apparent opening size (AOS) of not less than 40 U.S. mesh as determined by ASTM D 4751. Filter liner shall include a support basket of polypropylene geogrid with stainless steel cable reinforcement.

Filter frame shall be rated at a minimum 25-year service life. All other materials, with the exception of the hydrocarbon absorbent, shall have a rated service life in excess of 2 years.

FloGard®+PLUS TEST RESULTS SUMMARY

Testing Agency	% TSS Removal	% Oil and Grease Removal	% PAH Removal
UCLA	80	70 to 80	
U of Auckland Tonking & Taylor Ltd. (for city of Auckland)	78 to 95		
U of Hawaii (for city of Honolulu)	80		20 to 40

FEATURES

- Easy to install, inspect and maintain
- Can be retrofitted to existing drain catch basins – or used in new projects
- Economical and efficient
- Catches pollutants where they are easiest to catch (at the inlet)
- No standing water – minimizes vector, bacteria and odor problems
- Can be incorporated as part of a "Treatment Train"

BENEFITS

- Lower installation, inspection and maintenance costs
- Versatile installation applications
- Higher return on investment
- Allows for installation on small and confined sites
- Minimizes vector, bacteria and odor problems
- Allows user to target specific pollutants

Innovative stormwater management products

KRISTAR

FloGard® +PLUS

Catch Basin Insert Filter

INSTALLATION AND MAINTENANCE

Filter shall be installed and maintained in accordance with manufacturer's general instructions and recommendations.

PERFORMANCE

Filter shall provide 80% removal of total suspended solids (TSS) from treated flow with a particle size distribution consistent with typical urban street deposited sediments. Filter shall capture at least 70% of oil and grease and 40% of total phosphorus (TP) associated with organic debris from treated flow. Unit shall provide for isolation of trapped pollutants, including debris, sediments, and floatable trash and hydrocarbons, from bypass flow such that re-suspension and loss of pollutants is minimized during peak flow events.

FloGard®+PLUS COMPETITIVE FEATURE COMPARISON

Evaluation of FloGard+PLUS Units (Based on flow-comparable units) (Scale 1-10, 10 being best)	**FloGard+PLUS**	**Other Insert Filter Types****
Flow Rate	10	7
Removal Efficiency*	80%	45%
Capacity – Sludge and Oil	7	7
Service Life	10	3
Installation – Ease of Handling / Installation	8	6
Ease of Inspections & Maintenance	7	7
Value	**10**	**2**

*approximate, based on field sediment removal testing in urban street application **average

Long-Term Cost Comparison (Scale 1-10, 10 being lowest cost, higher number being best)	**FloGard+PLUS**	**Other Insert Filter Types**
Unit cost — initial ($/cfs treated)	10	4
Installation cost ($/cfs treated)	9	6
Adsorbent replacement (annual avg $/cfs treated)	10	2
Unit materials replacement (annual avg $/cfs treated)	10	10
Maintenance cost (annual avg $/cfs treated)	9	6
Total first yr ($/cfs treated)	10	5
Total Annual Avg ($/cfs treated, avg over 20 yrs)*	**10**	**5**

*assumes 3% annual inflation

FloGard+PLUS
Combination Inlet

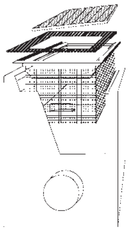

FloGard+PLUS
Flat Grate

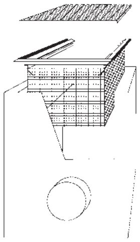

FloGard+PLUS
Round Gated Inlet

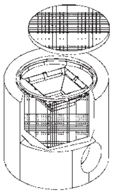

Captured debris from
FloGard+PLUS,
Dana Point, CA

KriStar Enterprises, Inc.
P.O. Box 6419
Santa Rosa, CA 95406-1419

PH: 800-579-8819
FAX: 707-524-8186
www.kristar.com

FGP-T 11.19.18.04.2M

FGP-0001

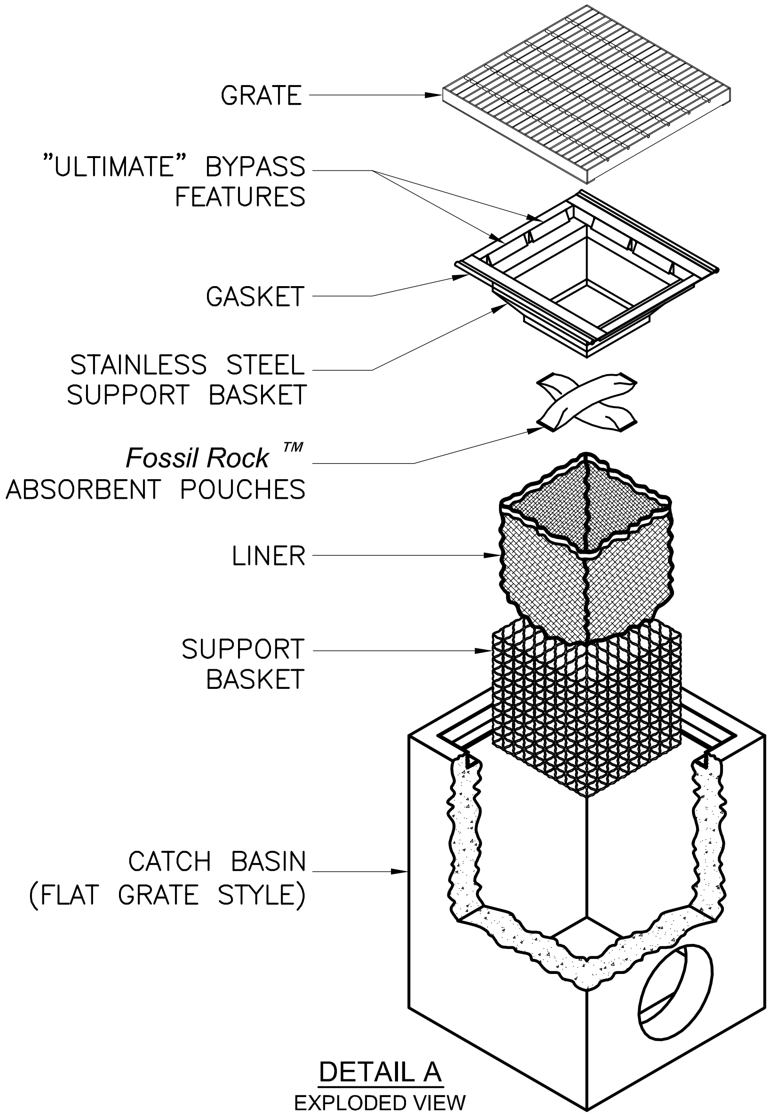

DETAIL A
EXPLODED VIEW

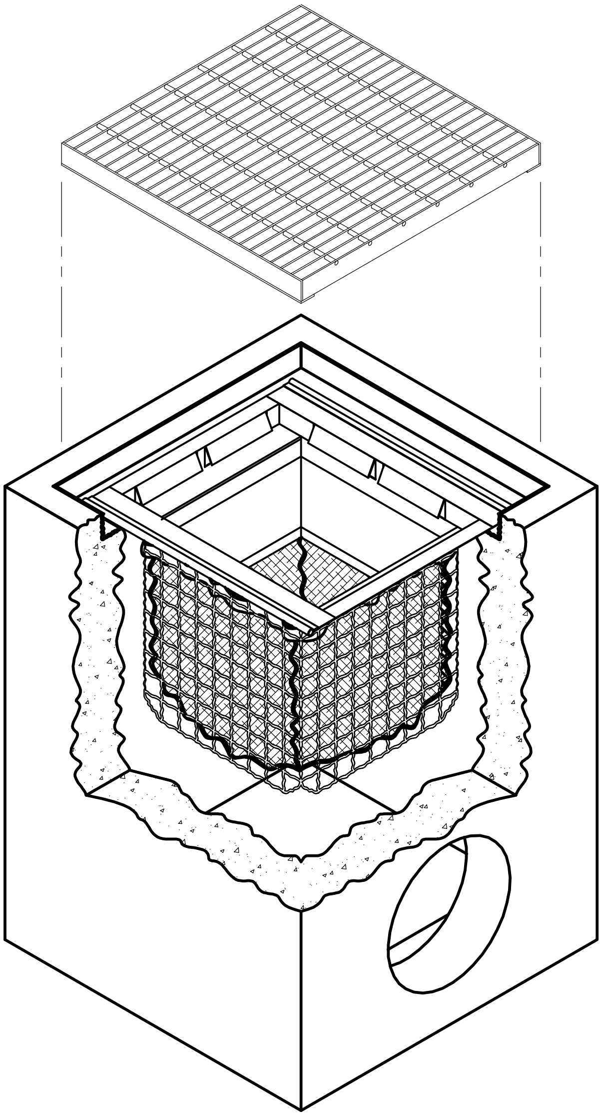

FLOGARD+PLUS® FILTER
-INSTALLED INTO CATCH BASIN-

NOTES:

1. FloGard®+Plus (frame mount) high capacity catch basin inserts are available in most sizes and styles (see specifier chart, sheet 2 of 2). Refer to the FloGard®+Plus (wall mount) insert for devices to fit non-standard, or combination style catch basins.

2. Filter insert shall have both an "initial" filtering bypass and "ultimate" high flow bypass feature.

3. Filter support frame shall be constructed from stainless steel Type 304.

4. Allow a minimum of 2.0 feet, of clearance between the bottom of the grate and top of outlet pipe(s), or refer to the FloGard® insert for "shallow" installations.

5. Filter medium shall be *Fossil Rock* ™, installed and maintained in accordance with manufacturer specifications.

6. Storage capacity reflects 80% of maximum solids collection prior to impeding filtering bypass.

7. Filtered flow r\rate includes a safety factor of two.

U.S. PATENT # 6,00,023 & 6,877,029

TITLE

FloGard® +PLUS
CATCH BASIN FILTER INSERT
(Frame Mount)
FLAT GRATED INLET

KriStar Enterprises, Inc.

P.O. Box 6419, Santa Rosa, CA 95406
Ph: 800.579.8819, Fax: 707.524.8186, www.kristar.com

DRAWING NO.	REV	ECO	DATE	
FGP-0001	A	0001	JPR 09/01/06	SHEET 1 OF 2

FGP-0001

U.S. PATENT # 6,00,023 & 6,877,029

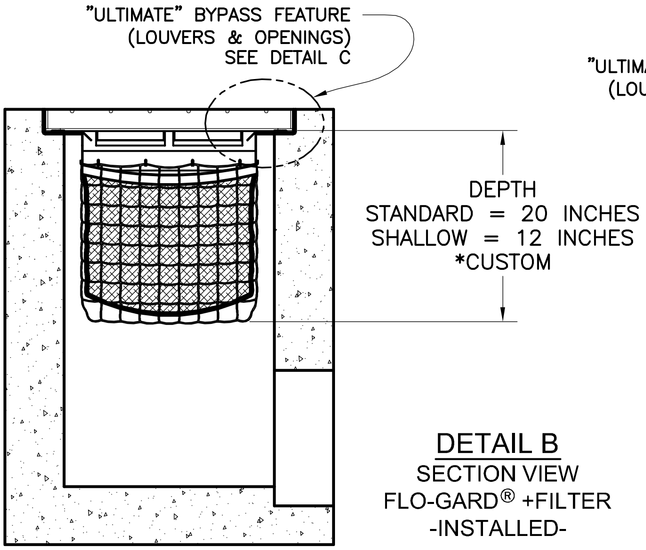

DETAIL B
SECTION VIEW
FLO-GARD® +FILTER
-INSTALLED-

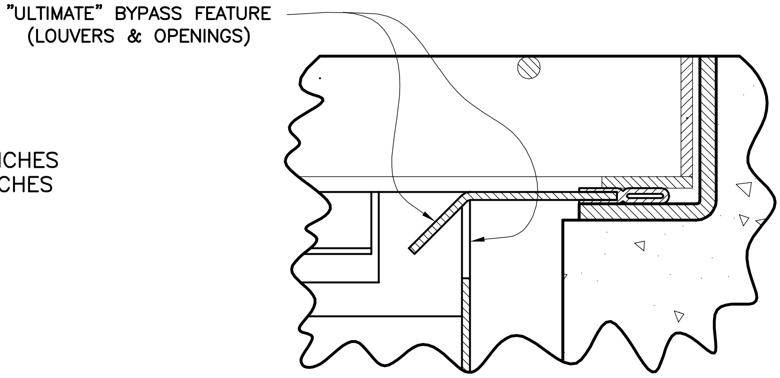

DETAIL C
"ULTIMATE"
BYPASS FEATURES

* MANY OTHER STANDARD & CUSTOM SIZES & DEPTHS AVAILABLE UPON REQUEST.

SPECIFIER CHART

MODEL NO. STANDARD DEPTH	STANDARD & SHALLOW DEPTH (Data in these columes is the same for both STANDARD & SHALLOW versions)			STANDARD DEPTH -20 Inches-		MODEL NO. SHALLOW DEPTH	SHALLOW DEPTH -12 Inches-	
	INLET ID Inside Dimension (inch x inch)	GRATE OD Outside Dimension (inch x inch)	TOTAL BYPASS CAPACITY (cu. ft.)	SOLIDS STORAGE CAPACITY (cu. ft.)	FILTERED FLOW (cu. ft. / sec.)		SOLIDS STORAGE CAPACITY (cu. ft.)	FILTERED FLOW (cu. ft. / sec.)
FGP-12F	12 X 12	12 X 14	2.8	0.3	0.4	FGP-12F8	.15	.25
FGP-1530F	15 X 30	15 X 35	6.9	2.3	1.6	FGP-1530F8	1.3	.9
FGP-16F	16 X 16	16 X 19	4.7	0.8	0.7	FGP-16F8	.45	.4
FGP-1624F	16 X 24	16 X 26	5.0	1.5	1.2	FGP-1624F8	.85	.7
FGP-18F	18 X 18	18 X 20	4.7	0.8	0.7	FGP-18F8	.45	.4
FGP-1820F	16 X 19	18 X 21	5.9	2.1	1.4	FGP-1820F8	1.2	.8
FGP-1824F	16 X 22	18 X 24	5.0	1.5	1.2	FGP-1824F8	.85	.7
FGP-1836F	18 X 36	18 X 40	6.9	2.3	1.6	FGP-1836F8	1.3	.9
FGP-2024F	18 X 22	20 X 24	5.9	1.2	1.0	FGP-2024F8	.7	.55
FGP-21F	22 X 22	22 X 24	6.1	2.2	1.5	FGP-21F8	1.25	.85
FGP-2142F	21 X 40	24 X 40	9.1	4.3	2.4	FGP-2142F8	2.45	1.35
FGP-2148F	19 X 46	22 X 48	9.8	4.7	2.6	FGP-2148F8	2.7	1.5
FGP-24F	24 X 24	24 X 27	6.1	2.2	1.5	FGP-24F8	1.25	.85
FGP-2430F	24 X 30	26 X 30	7.0	2.8	1.8	FGP-2430F8	1.6	1.05
FGP-2436F	24 X 36	24 X 40	8.0	3.4	2.0	FGP-2436F8	1.95	1.15
FGP-2448F	24 X 48	26 X 48	9.3	4.4	2.4	FGP-2448F8	2.5	1.35
FGP-28F	28 X 28	32 X 32	6.3	2.2	1.5	FGP-28F8	1.25	.85
FGP-2440F	24 X 36	28 X 40	8.3	4.2	2.3	FGP-2440F8	2.4	1.3
FGP-30F	30 X 30	30 X 34	8.1	3.6	2.0	FGP-30F8	2.05	1.15
FGP-36F	36 X 36	36 X 40	9.1	4.6	2.4	FGP-36F8	2.65	1.35
FGP-3648F	36 X 48	40 X 48	11.5	6.8	3.2	FGP-3648F8	3.9	1.85
FGP-48F	48 X 48	48 X 54	13.2	9.5	3.9	FGP-48F8	5.45	2.25
FGP-SD24F	24 X 24	28 X 28	6.1	2.2	1.5	FGP-SD24F8	1.25	.85
FGP-1836FGO	18 X 36	20 X 40	6.9	2.3	1.6	FGP-1836F8GO	1.3	.9
FGP-2436FGO	20 X 36	24 X 40	8.0	3.4	2.0	FGP-2436F8GO	1.95	1.15
FGP-48FGO	18 X 48	20 X 54	6.3	2.2	1.5	FGP-48F8GO	1.25	.85

TITLE

FloGard® +PLUS
CATCH BASIN FILTER INSERT
(Frame Mount)
FLAT GRATED INLET

KriStar Enterprises, Inc.
P.O. Box 6419, Santa Rosa, CA 95406
Ph: 800.579.8819, Fax: 707.524.8186, www.kristar.com

DRAWING NO.	REV	ECO	DATE	
FGP-0001	A	0001	JPR 09/01/06	SHEET 2 OF 2

SPECIFIER CHART

MODEL NO.	Curb Opening Width - W -	Storage Capacity - Cu. Ft. -	Filtered Flow Rate - GPM/CFS -	Bypass Flow Rate - GPM/CFS -
FGP-24CI	2.0' (24")	.95	338 / .75	2,513 / 5.6
FGP-30CI	2.5' (30")	1.20	450 / 1.00	3,008 / 6.7
FGP-36CI	3.0' (36")	1.50	563 / 1.25	3,547 / 7.9
FGP-42CI	3.5' (42")	1.80	675 / 1.50	3,951 / 8.8
FGP-48CI	4.0' (48")	2.10	768 / 1.76	4,445 / 9.9
FGP-5.0CI	5.0' (60")	2.40	900 / 2.00	5,208 / 11.6
FGP-6.0CI	6.0' (72")	3.05	1,126 / 2.51	6,196 / 13.8
FGP-7.0CI	7.0' (84")	3.65	1,350 / 3.01	7,139 / 15.9
FGP-8.0CI	8.0' (96")	4.25	1,576 / 3.51	8,082 / 18.0
FGP-10.0CI	10.0' (120")	4.85	1,800 / 4.01	9,833 / 21.9
FGP-12.0CI	12.0' (144")	6.10	2,252 / 5.02	11,764 / 26.2
FGP-14.0CI	14.0' (168")	7.30	2,700 / 6.02	13,515 / 30.1
FGP-16.0CI	16.0' (192")	8.55	3.152 / 7.02	15,446 / 34.4
FGP-18.0CI	18.0' (216")	9.45	3,490 / 7.78	17,152 / 38.2
FGP-21.0CI	21.0' (252")	10.95	4,050 / 9.02	19,891 / 44.3
FGP-28.0CI	28.0 (336")	14.60	5,400 / 12.03	26,311 / 58.6

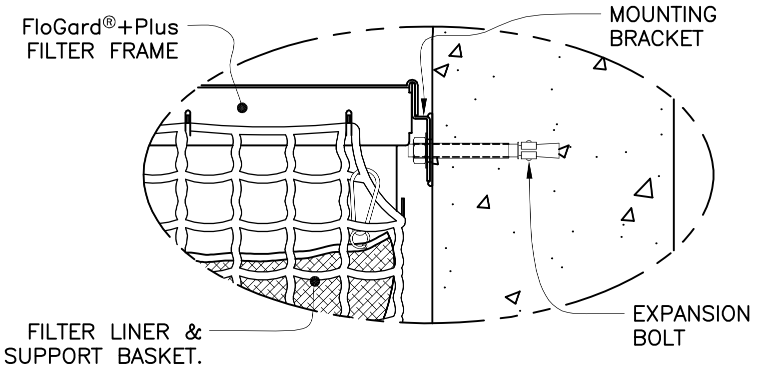

DETAIL A
MOUNTING BRACKET & EXPANSION BOLTS
SEE NOTE 2
SCALE 6/1

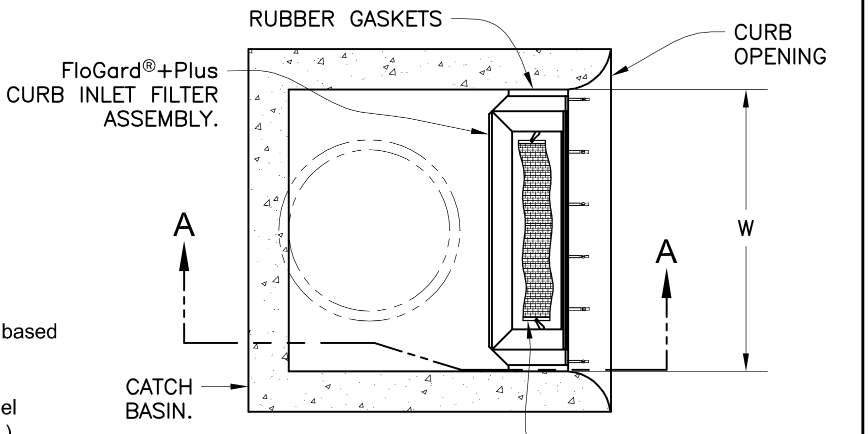

SECTION B-B
TOP VIEW
SCALE 1/1

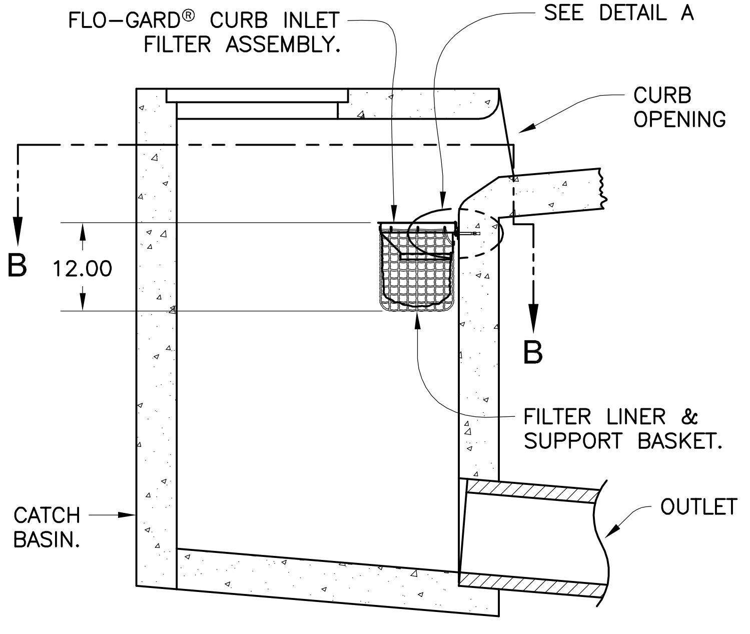

SECTION A-A
SIDE VIEW
SCALE 1/1

NOTES:

1. FloGard®+PLUS filter inserts shall be installed across the entire width of curb opening. Storage capacity and clean flow rates are based on full width installation.

2. Filter insert shall be attached to the catch basin with stainless steel expansion anchor bolts & washers (3/8" x 2-1/2" minimum length.) See detail A.

3. FloGard®+PLUS filter inserts are designed with a debris trap/energy dissipator for the retention of floatables and collected sediments .

4. Filter support frame shall be constructed from stainless steel Type 304.

5. Filter liner shall be constructed from durable polypropylene, woven, monofilament, geotextile. Filter liner shall not allow the retention of water between storm events.

6. Filter inserts are supplied with "clip-in" filter pouches utilizing FOSSIL ROCK™ filter medium for the collection and retention of petroleum hydrocarbons (oils & greases).

7. FloGard®+PLUS filter inserts and FOSSIL ROCK ™ filter medium pouches must be maintained in accordance with manufacturer recommendations.

8. FloGard +PLUS filter inserts are available in standard lengths of 24", 30",35", 42" & 48" and may be installed in various length combinations (end to end) to fit length of noted catch basin.

9. Clean flow rates are "calculated" based on liner flow rate of 140 gallons per minute per square foot of material, a factor of .50 has been applied to allow for anticipated sediment & debris loading. An additional safety factor of between .25 & .50 may be applied to allow for site specific sediment loading.

10. Storage capacity reflects maximum solids collection prior to impending "initial" filtering bypass. The "ultimate" high-flow bypass will not become impeded due to maximum solids loading.

TITLE

FloGard® +PLUS
CATCH BASIN FILTER INSERT
(Curb Inlet Style)

KRISTAR

KriStar Enterprises, Inc.
360 Sutton Place, Santa Rosa, CA 95407
Ph: 800.579.8819, Fax: 707.524.8186, www.kristar.com

DRAWING NO.	REV	ECO	DATE	
FGP-0002	D	0059 JPR 12/30/08	JPR 11/3/06	SHEET 1 OF 1

GENERAL SPECIFICATIONS FOR MAINTENANCE OF *FLO-GARD+PLUS*® CATCH BASIN INSERT FILTERS

SCOPE:

Federal, State and Local Clean Water Act regulations and those of insurance carriers require that stormwater filtration systems be maintained and serviced on a recurring basis. The intent of the regulations is to ensure that the systems, on a continuing basis, efficiently remove pollutants from stormwater runoff thereby preventing pollution of the nation's water resources. These specifications apply to the FloGard+Plus® Catch Basin Insert Filter.

RECOMMENDED FREQUENCY OF SERVICE:

Drainage Protection Systems (DPS) recommends that installed Flo-Gard+Plus® Catch Basin Insert Filters be serviced on a recurring basis. Ultimately, the frequency depends on the amount of runoff, pollutant loading and interference from debris (leaves, vegetation, cans, paper, etc.); however, it is recommended that each installation be serviced a minimum of three times per year, with a change of filter medium once per year. DPS technicians are available to do an on-site evaluation, upon request.

RECOMMENDED TIMING OF SERVICE:

DPS guidelines for the timing of service are as follows:

1. For areas with a definite rainy season: Prior to, during and following the rainy season.
2. For areas subject to year-round rainfall: On a recurring basis (at least three times per year).
3. For areas with winter snow and summer rain: Prior to and just after the snow season and during the summer rain season.
4. For installed devices not subject to the elements (washracks, parking garages, etc.): On a recurring basis (no less than three times per years).

SERVICE PROCEDURES:

1. The catch basin grate shall be removed and set to one side. The catch basin shall be visually inspected for defects and possible illegal dumping. If illegal dumping has occurred, the proper authorities and property owner representative shall be notified as soon as practicable.
2. Using an industrial vacuum, the collected materials shall be removed from the liner. (Note: DPS uses a truck-mounted vacuum for servicing Flo-Gard+Plus® catch basin inserts.)
3. When all of the collected materials have been removed, the filter medium pouches shall be removed by unsnapping the tether from the D-ring and set to one side. The filter liner, gaskets, stainless steel frame and mounting brackets, etc. shall be inspected for continued serviceability. Minor damage or defects found shall be corrected on-the-spot and a notation made on the Maintenance Record. More extensive deficiencies that affect the efficiency of the filter (torn liner, etc.), if approved by the customer representative, will be corrected and an invoice submitted to the representative along with the Maintenance Record.
4. The filter medium pouches shall be inspected for defects and continued serviceability and replaced as necessary and the pouch tethers re-attached to the liner's D-ring. See below.
5. The grate shall be replaced.

REPLACEMENT AND DISPOSAL OF EXPOSED FILTER MEDIUM AND COLLECTED DEBRIS

The frequency of filter medium pouch exchange will be in accordance with the existing DPS-Customer Maintenance Contract. DPS recommends that the medium be changed at least once per year. During the appropriate service, or if so determined by the service technician during a non-scheduled service, the filter medium pouches will be replaced with new pouches. Once the exposed pouches and debris have been removed, DPS has possession and must dispose of it in accordance with local, state and federal agency requirements.

DPS also has the capability of servicing all manner of catch basin inserts and catch basins without inserts, underground oil/water separators, stormwater interceptors and other such devices. All DPS personnel are highly qualified technicians and are confined space trained and certified. Call us at (888) 950-8826 for further information and assistance.

APPENDIX J

BMP Fact Sheet—

INF-7: Underground Infiltration Fact Sheet (from Orange County TGD for Project WQMPs)

INF-7: Underground Infiltration

Underground infiltration is a vault or chamber with an open bottom that used to store runoff and percolate into the subsurface. A number of vendors offer proprietary infiltration products that allow for similar or enhanced rates of infiltration and subsurface storage while offering durable prefrabricated structures. There are many varieties of proprietary infiltration BMPs that can be used for roads and parking lots, parks and open spaces, single and multi-family residential, or mixed-use and commercial uses.

Also known as:

- *Infiltration vault*
- *Recharge vault*

Underground Infiltration

Source: http://www.contech-cpi.com

Feasibility Screening Considerations

- Infiltration bains shall pass infeasible screening criteria to be considered for use.
- Underground infiltration galleries pose a potential risk of groundwater contamination; pretreatment should be used.

Opportunity Criteria

- Soils are adequate for infiltration or can be amended to provide an adequate infiltration rate.
- Appropriate for sites with limited surface space.
- Can be placed beneath roads, parking lots, parks, and athletic fields.
- Potential for groundwater contamination can be mitigated through isolation of pollutant sources, pretreatment of inflow, and/or demonstration of adequate treatment capacity of underlying soils.
- Infiltration is into native soil, or depth of engineered fill is ≤ 5 feet from the bottom of the facility to native material and infiltration into fill is approved by a geotechnical professional.
- Tributary area land uses include mixed-use and commercial, sngle-family and multi-family, roads and parking lots, and parks and open spaces. High pollutant land uses should not be tributary to infiltration BMPs.

OC-Specific Design Criteria and Considerations

☐ Placement of BMPs should observe geotechnical recommendations with respect to geological hazards (e.g. landslides, liquefaction zones, erosion, etc.) and set-backs (e.g., foundations, utilities, roadways, etc.)

☐ Minimum separation to mounded seasonally high groundwater of 10 feet shall be observed.

☐ Minimum pretreatment should be provided upstream of the infiltration facility, and water bypassing pretreatment should not be directed to the facility.

☐ Underground infiltration should not be used for drainage areas with high sediment production potential unless preceded by full treatment control with a BMP effective for sediment removal.

☐ Design infiltration rate should be determined as described in Appendix VII.

☐ Inspection ports or similar design features shall be provided to verify continued system performance and identify need for major maintenance.

☐ For infiltration facilities beneath roads and parking areas, structural requirements should meet H-20 load requirements.

Computing Underground Infiltration Device Size

Underground infiltration devices vary by design and by proprietary designs. The sizing method selected for use must be based on the BMP type it most strongly resembles.

- For underground infiltration devices with open pore volume (e.g., vaults, crates, pipe sections, etc), sizing will be most similar to infiltration basins.
- For underground infiltration devices with pore space (e.g., aggregate reservoirs), sizing will be most similar to permeable pavement.

Additional References for Design Guidance

- Los Angeles Unified School District (LAUSD) Stormwater Technical Manual, Chapter 5: http://www.laschools.org/employee/design/fs-studies-and-reports/download/white_paper_report_material/Storm_Water_Technical_Manual_2009-opt-red.pdf?version_id=76975850

APPENDIX K

BMP Educational Materials

- **Commercial Landscape Maintenance Fact Sheet (San Bernardino County Stormwater Program Website)**
- **Stormwater Management Practices for Commercial Landscape Maintenance Brochure (San Bernardino County Stormwater Program Website)**
- **Sustainable Practices for Landscape Maintenance Brochure for Homeowners (San Bernardino County Stormwater Program Website)**
- **Construction & Development Fact Sheet (San Bernardino County Stormwater Program Website)**
- **Regulatory Information Fact Sheet (San Bernardino County Stormwater Program Website)**
- **Toxic Household Waste Brochure for Homeowners (San Bernardino County Stormwater Program Website)**
- **Pet Waste Brochure for Homeowners (San Bernardino County Stormwater Program Website)**
- **SC-35 Safer Alternative Products**
- **SC-41 Building & Grounds Maintenance**
- **SC-42 Building Repair and Construction**
- **SC-43 Parking / Storage Area Maintenance**
- **SC-44 Drainage System Maintenance**
- **SD-10 Site Design & Landscape Planning**
- **SD-12 Efficient Irrigation**
- **SD-13 Storm Drain Signage**

SAN BERNARDINO COUNTY
STORMWATER POLLUTION PREVENTION

Commercial landscape maintenance:

Yard waste, sediments and toxic lawn and garden chemicals used in commercial landscape maintenance often make their way into the San Bernardino County storm drain system and do not get treated before reaching the Santa Ana River. This pollutes our drinking water and contaminates local waterways, making them unsafe for people and wildlife. Follow these best management practices to prevent pollution, protect public health and avoid fines or legal action.

- **Recycle Yard Waste:** Recycle leaves, grass clippings and other yard waste. Do not blow, sweep, rake or hose yard waste into the street. Let your customers know about grass cycling --the natural recycling of grass by leaving clippings on the lawn when mowing instead of using a grass catcher. Grass clippings will quickly decompose, returning valuable nutrients to the soil. You can get more information at www.ciwmb.ca.gov/Organics.
- **Use Fertilizers, Herbicides & Pesticides Safely:** Fertilizers, herbicides and pesticides are often carried into the storm drain system by sprinkler runoff. Use natural, non-toxic alternatives to traditional garden chemicals. If you must use chemical fertilizers, herbicides, or pesticides spot apply rather than blanketing entire areas, avoid applying near curbs and driveways and never apply before a rain.
- **Recycle Hazardous Waste:** Pesticides, fertilizers, herbicides and motor oil contaminate landfills and should be disposed of through a Hazardous Waste Facility. For information on proper disposal, call (909) 386-8401.
- **Use Water Wisely:** Conserve water and prevent runoff by controlling the amount of water and direction of sprinklers. Sprinklers should be on long enough to allow water to soak into the ground but not so long as to cause runoff. Periodically inspect, fix leaks and realign sprinkler heads.
- **Planting:** Plant native vegetation to reduce the need of water, fertilizers, herbicides and pesticides.
- **Prevent Erosion:** Erosion washes sediments, debris and toxic runoff into the storm drain system, polluting waterways. Prevent erosion and sediment runoff by using ground cover, berms and vegetation down-slope to capture runoff. Avoid excavation or grading during wet weather.
- **Store Materials Safely:** Keep landscaping materials and debris away from the street, gutter and storm drains. On-site stockpiles of materials should be covered with plastic sheeting to protect from rain, wind and runoff.

For more information about how you can prevent stormwater pollution:

www.sbcountystormwater.org

PRESORTED
STANDARD
U.S. POSTAGE
PAID
SACRAMENTO, CA
PERMIT# 000

San Bernardino County Stormwater Program
825 East Third Street · Room 127
San Bernardino, CA 94215-0835

STORMWATER
Pollution Prevention

LANDSCAPE MAINTENANCE

San
Bernardino
County
STORMWATER PROGRAM

STORMWATER Pollution Prevention

Stormwater Management Practices for Commercial Landscape Maintenance

Yard waste, sediments, and toxic lawn/garden chemicals used in commercial landscape maintenance often make their way into the San Bernardino County storm drain system and do not get treated before reaching the Santa Ana River. This pollutes our drinking water and contaminates local waterways, making them unsafe for people and wildlife. Following these best management practices will prevent pollution, comply with regulations and protect public health.

Recycle Yard Waste

Recycle leaves, grass clippings and other yard waste. Do not blow, sweep, rake or hose yard waste into the street. Try grasscycling - the natural recycling of grass by leaving clippings on the lawn when mowing. Grass clippings will quickly decompose, returning valuable nutrients to the soil. Further information can be obtained at www.ciwmb.ca.gov/Organics.

Use Fertilizers, Herbicides and Pesticides Safely

Fertilizers, herbicides and pesticides are often carried into the storm drain system by sprinkler runoff. Use of natural, non-toxic alternatives to the traditional fertilizers, herbicides and pesticides is highly recommended. If you must use chemical fertilizers, herbicides, or pesticides:

- Spot apply pesticides and herbicides, rather than blanketing entire areas.
- Avoid applying near curbs and driveways, and never apply before a rain.
- Apply fertilizers as needed, when plants can best use it, and when the potential for it being carried away by runoff is low.

Recycle Hazardous Waste

Pesticides, fertilizers, herbicides and motor oil contaminate landfills and should be disposed of through a Hazardous Waste Facility, which accepts these types of materials. For information on proper disposal call, (909) 386-8401.

Use Water Wisely

Conserve water and prevent runoff by controlling the amount of water and direction of sprinklers. Sprinklers should be on long enough to allow water to soak into the ground but not so long as to cause runoff. Periodically inspect, fix leaks and realign sprinkler heads. Plant native vegetation to reduce the need of water, fertilizers, herbicides, and pesticides.

Prevent Erosion

Erosion washes sediments, debris and toxic runoff into the storm drain system, polluting waterways.

- Prevent erosion and sediment runoff by using ground cover, berms and vegetation down-slope to capture runoff.
- Avoid excavation or grading during wet weather.

Store Materials Safely

Keep landscaping materials and debris away from the street, gutter and storm drains. On-site stockpiles of materials must be covered with plastic sheeting to protect from rain, wind and runoff.

To report illegal dumping call

(877) WASTE18

or visit our website:

sbcountystormwater.org

San Bernardino County
STORMWATER PROGRAM

DISCHARGE TO THE STORM DRAIN, ACCIDENTAL OR NOT, COULD LEAD TO ENFORCEMENT ACTIONS AND FINES

Sustainable Practices for Landscape Maintenance

Your contributions make a difference in the way you maintain your yard. Learn how to truly be a “green” thumb and prevent stormwater pollution.

Recycle Yard Waste

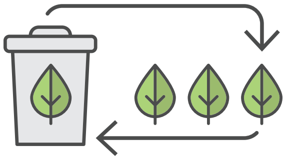

Yard waste, like grass and leaves, can block the storm drain or carry harmful chemicals into it.

- Recycle yard waste by placing them into your greenwaste container.
- Do not blow, sweep, rake, or hose yard waste into the street or catch basin.
- Try grasscycling by leaving clippings on the lawn when mowing.

For more information, visit www.calrecycle.ca.gov/organics/grasscycling.

Use Safe Products

Fertilizers, herbicides, and pesticides are often carried into the storm drain by sprinkler runoff.

- Use natural and non-toxic alternatives as often as possible.
- Spot-apply, rather than blanketing entire areas.

Apply chemicals directly to the area that needs treatment.

- Read the product label and use only as directed.
- Never apply before a rain.

Use Water Wisely

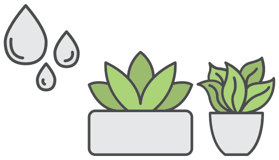

Conserving water minimizes the amount of urban runoff going into the street.

- Control the amount of water and direction of sprinklers.

The average lawn only needs about an inch of water a week or 10 to 20 minutes of watering.

- Periodically inspect and fix sprinklers for leaks.

Realign sprinkler heads to make sure water is distributed onto the lawn and not onto the sidewalk.

- Plant native vegetation to reduce the need of water.

HOMEOWNERS

Keep these tips in mind when hiring professional landscapers and remind them as necessary.

Leftover pesticides, fertilizers, and herbicides contaminate landfills and should be disposed of through a Household Hazardous Waste Center*.

For more information on proper disposal, call 1 (800) OILYCAT or visit tootoxictotrash.com.

**FREE for San Bernardino County residents.*
Businesses can call for cost inquiries and to schedule an appointment.

To report illegal dumping or toxic spills, call **(877) WASTE18**
or visit **tootoxictotrash.com**

To dispose of hazardous waste, call **1 (800) OILYCAT**

SAN BERNARDINO COUNTY STORMWATER PROGRAM
WHERE WATER MEETS COMMUNITY

sbcountystormwater.org

Big Bear • Chino • Chino Hills • Colton • Fontana • Grand Terrace • Highland • Loma Linda • Montclair • Ontario • Rancho Cucamonga • Redlands
Rialto • San Bernardino • San Bernardino County • San Bernardino County Flood Control District • Upland • Yucaipa

DESCARGAR DESECHOS HACIA EL DRENAJE DE AGUAS PLUVIALES, ACCIDENTALMENTE O NO, PODRÍA DESENCADENAR ACCIONES POR PARTE DE LAS AUTORIDADES, INCLUYENDO MULTAS

Prácticas Sostenibles para el Mantenimiento de Jardinería

Sus acciones pueden marcar una gran diferencia en la forma en que usted mantenga su jardín. Aprenda cómo implementar prácticas ecológicas y prevenir la contaminación de las aguas pluviales.

Recicle los Residuos de Jardín

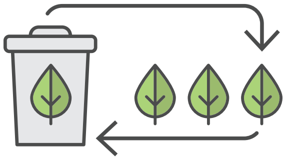

Los desechos de jardín, como la hierba y las hojas, pueden bloquear el drenaje pluvial o transportar productos químicos dañinos.

- Recicle los desechos del jardín colocándolos en su contenedor verde de desechos.
- No sople, barra, rastrille ni riegue los desechos del patio en la calle o en la cuneta.
- Intente reciclar el césped dejando los recortes sobre el césped.

Para obtener más información, visite el sitio web en inglés www.calrecycle.ca.gov/organics/grasscycling.

Use Productos Seguros

Los fertilizantes, herbicidas y pesticidas a menudo son arrastrados al drenaje pluvial a través del agua sobrante proveniente de los rociadores.

- Use alternativas naturales y no tóxicas con la mayor frecuencia posible.
- Aplique los productos en las áreas específicas que requiera tratamiento en lugar de cubrir áreas enteras.
- Lea la etiqueta del producto y use solo como se indica.
- Nunca aplique antes de una lluvia.

Use el Agua de Forma Inteligente

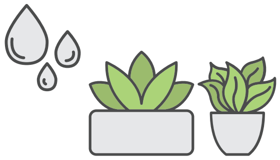

La conservación del agua minimiza la cantidad de escorrentía que va a la calle a través del agua sobrante.

- Controle la cantidad de agua y la dirección de los rociadores.

El césped promedio solo necesita aproximadamente una pulgada de agua por semana, incluida la lluvia, o 10 a 20 minutos de riego.

- Inspeccione y repare periódicamente los rociadores para detectar fugas y goteos.

Realinie las cabezas de los rociadores para asegurarse de que el agua se distribuya en el césped y no en la acera.

- Plante vegetación autóctona para reducir la necesidad de agua.

PROPIETARIOS

Tenga en cuenta estos consejos al contratar jardineros profesionales y haga que los mantengan presente como sea necesario.

Los pesticidas, fertilizantes y herbicidas sobrantes contaminan los vertederos y deben desecharse a través de un Centro de Residuos Domésticos Peligrosos*.

Para obtener más información sobre la forma de desechar adecuadamente residuos peligrosos, llame al 1 (800) 645-9228 o visite muytoxicoparabotar.com.

**GRATIS para los residentes del Condado de San Bernardino. Las empresas pueden llamar para consultar los costos y para programar una cita.*

Para reportar desechos ilegales o derrames tóxicos, llame al **(877) 927-8318** o visite **muytoxicoparabotar.com**

Para eliminar residuos peligrosos, llame al **1 (800) 645-9228**

sbcountystormwater.org

SAN BERNARDINO COUNTY STORMWATER PROGRAM
WHERE WATER MEETS COMMUNITY

Big Bear • Chino • Chino Hills • Colton • Fontana • Grand Terrace • Highland • Loma Linda • Montclair • Ontario • Rancho Cucamonga • Redlands
Rialto • San Bernardino • San Bernardino County • San Bernardino County Flood Control District • Upland • Yucaipa

SAN BERNARDINO COUNTY
STORMWATER POLLUTION PREVENTION

Construction & development:

Soil, cement wash, asphalt, oil and other hazardous debris from construction sites often make their way into the San Bernardino County storm drain system, and flow untreated into local waterways. Follow these best management practices to prevent pollution, protect public health and avoid fines or legal action.

- **Store Materials Safely:** Keep construction materials and debris away from the street, gutter and storm drains. Cover exposed stockpiles of soil, sand or gravel and excavated material with plastic sheeting, protected from rain, wind and runoff.
- **Preventing Erosion:** Avoid excavation or grading during wet weather. Plant temporary vegetation or add hydro mulch on slopes where construction is not immediately planned, and permanent vegetation once excavation and grading are complete. Construct diversion dikes to channel runoff to a detention basin and around the construction site. Use gravel approaches where truck traffic is frequent to reduce soil compaction and limit the tracking of sediment into the streets. For more information on erosion control, call (909) 799-7407.

- **Cleaning & Preventing Spills:** Use a drip pan and funnel when draining or pouring fluids. Sweep up dry spills, instead of hosing. Be ready for spills by preparing and using spill containment and cleanup kits that include safety equipment and dry cleanup materials such as kitty litter or sawdust. To report serious spills, call 911.
- **Maintaining Vehicles & Equipment:** Maintain and refuel vehicles and equipment at a single location on-site, away from the street, gutter and storm drains. Perform major equipment repairs and washings off-site. Inspect vehicles and equipment frequently for leaks, and prevent leaks from stored vehicles by draining gas, hydraulic oil, transmission, and brake and radiator fluids.
- **Ordering Materials & Recycling Waste:** Reduce waste by ordering only the amounts of materials needed for the job. Use recycled or recyclable materials whenever possible. You can recycle broken asphalt, concrete, wood, and cleared vegetation. Dispose of hazardous materials through a hazardous waste hauler or other means in accordance with the construction permit. Non-recyclable materials should be taken to a landfill or disposed of as hazardous waste. For recycling and disposal information, call (909) 386-8401.
- **Concrete and mortar application:** Never dispose of cement washout into driveways, streets, gutters or drainage ditches. Wash concrete mixers and equipment only in specified washout areas, where the water flows into lined containment ponds. Cement wash water can be recycled by pumping it back into cement mixers for reuse.

For more information about how you can prevent stormwater pollution:

www.sbcountystormwater.org

SAN BERNARDINO COUNTY STORMWATER PROGRAM
WHERE WATER
MEETS COMMUNITY

Regulatory Information

The Federal Water Pollution Control Act prohibits the discharge of any pollutant to navigable waters from a point source unless the discharge is authorized by a National Pollutant Discharge Elimination System (NPDES) permit. The 1987 passage of the Water Quality Act established NPDES permit requirements for discharges of storm water. The NPDES permit program controls water pollution by regulating point sources that discharge pollutants into waters of the United States.

Industrial facilities and construction sites are regulated by the Regional Water Quality Control Board and State Water Resources Control Board, through general storm water permits. Most industrial, manufacturing or transportation businesses that store materials, products or equipment outdoors, or conduct vehicle washing or process operations outdoors are required to obtain coverage under the State Water Resources Control Board's General Industrial Activities Stormwater Permit. For more information about this permit, visit *http://www.waterboards.ca.gov/centralcoast/water_issues/programs/stormwater/industrial.shtml* or contact your local storm water coordinator.

If your business conducts construction activities, including clearing, grading, stockpiling or excavation that results in soil disturbances of at least one acre, you are subject to the State Water Resources Control Board's General Construction Activities Stormwater Permit. To find out more about this storm water permit for construction, visit
https://www.waterboards.ca.gov/centralcoast/water_issues/programs/stormwater/construction_new.shtml.
Cities and counties are regulated through permits issued by the Regional Boards. Since 1990 operators of large storm drain systems such as San Bernardino County's have been required to:

- Develop a storm water management program designed to prevent harmful pollutants from being dumped or washed by storm water runoff, into the storm water system, then discharged into local water bodies; and
- Obtain a National Pollutant Discharge Elimination System (NPDES) permit.

The NPDES permit programs in California are administered by the State Water Resources Control Board and by nine regional boards that issue NPDES permits and enforce regulations within their respective region.

San Bernardino County lies within the jurisdiction of the Santa Ana Region. This regional board issues a permit to the San Bernardino County Permittees, which includes the County of San Bernardino, San Bernardino County Flood Control District and incorporated cities of San Bernardino County. Since the program's inception, the County of San Bernardino has served as the principal permittee.

Documents & Reports:

The following documents describe the regulations and programs for water quality in San Bernardino County. You can review the latest Basin Plan. National Pollutant Discharge Elimination System (NPDES) Permit and Drainage Area Management Plan (DAMP).

- **Basin Plans:** The document for each region of the State Water Quality Board's jurisdiction, including Santa Ana, is the Water Quality Control Plan, commonly referred to as the Basin Plan. It is the foundation for the regulatory programs of each regional board. The Basin Plan documents the beneficial uses of the region's ground and surface waters, existing water quality conditions, problems, and goals, and actions by the regional board and others that are necessary to achieve and maintain water quality standards.

Water Control Plan for the Santa Ana River Basin

- **Municipal National Pollutant Discharge Elimination System (NPDES) Permits:** The permits of each region outline additional steps for a storm water management program and specify requirements to help protect the beneficial uses of the receiving waters. They require permittees to develop and implement Best Management Practices (BMPs) to control/reduce the discharge of pollutants to waters of the United States to the maximum extent practicable (MEP).

Santa Ana Regional Water Quality Control Board Municipal NPDES Permit Order No. R8-2002-0Q12

- **Report of Waste Discharge:** The Report of Waste Discharge (ROWD) describes the San Bernardino Stormwater Program, implemented by the County and cities to comply with their jointly held stormwater permit. It is the principle policy and guidance document for the NPDES Stormwater Program.

Report of Waste Discharge 2000

- **San Bernardino County Storm Water Program Annual Status Report:** The Annual Status Report is a requirement of the NPDES permit for submittal to the Regional Boards and United States Environmental Protection Agency. The report presents an analysis and assessment of permit compliance activities.

Annual Report - will be posted soon

BRING US YOUR TOXIC WASTE

Take toxic household products to your local household hazardous waste collection center.

IT'S EASY!

1 Make sure products are **properly sealed**, **labeled**, and **spill-proof**.*

2 Take them to a **FREE** collection center in:

- Big Bear Lake
- Chino
- Fontana
- Ontario
- Rancho Cucamonga
- Redlands
- Rialto
- San Bernardino
- Upland

TOXIC HOUSEHOLD PRODUCTS INCLUDE:

- Automotive Fluids
- Batteries
- Cooking Oil
- Fertilizers & Pesticides
- Fluorescent Bulbs
- Household Cleaners
- Medicine
- Motor Oil & Filters
- Paint Products
- Pool Chemicals

WHY CAN'T I THROW THESE ITEMS IN THE TRASH?

It is illegal and poses health risks to humans, pets, the environment, and our waterways.

For more information, locations and a full list of items, visit

tootoxictotrash.com

** You can bring 15 gallons or 125 pounds in containers no larger than 5 gallons per visit. No business waste accepted. Must be a San Bernardino County resident.*

SAN BERNARDINO COUNTY STORMWATER PROGRAM
WHERE WATER MEETS COMMUNITY

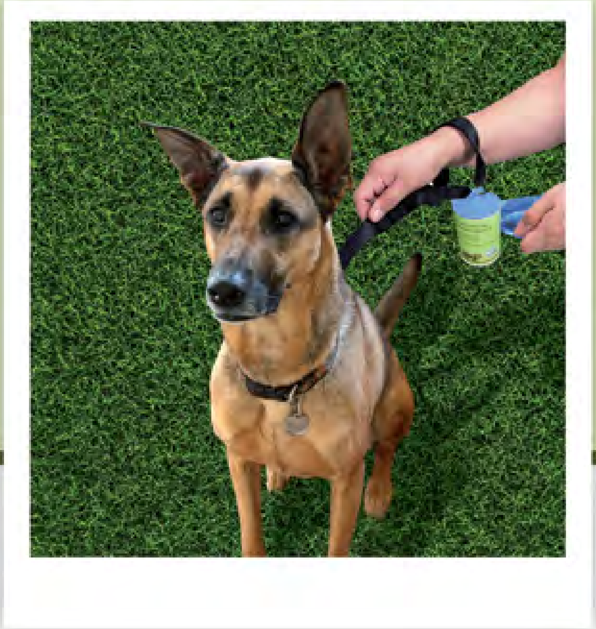

For more information about
current campaigns visit
sbcountystormwater.org/dog

facebook.com/sbcountystormwater

Big Bear • Chino • Chino Hills • Colton • Fontana • Grand Terrace • Highland • Loma Linda •
Montclair • Ontario • Rancho Cucamonga • Redlands • Rialto • San Bernardino •
San Bernardino County • San Bernardino County Flood Control District • Upland • Yucaipa

PICK UP
After Your Pet!

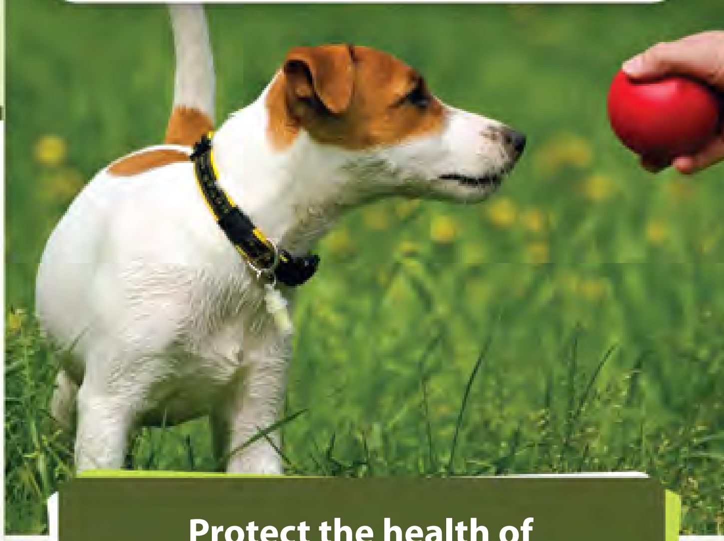

**Protect the health of
your pet and the environment**

SAN BERNARDINO COUNTY STORMWATER PROGRAM
**WHERE WATER
MEETS COMMUNITY**

WHY IT MATTERS

PROTECT YOUR FAMILY AND YOUR PET

- Dog waste can infect children and adults with disease-causing bacteria and parasites.
- Your dog can get infected from the waste of other dogs.

PROTECT OUR ENVIRONMENT

Leaving dog waste on the streets or on your property can have a negative impact on water quality. Pet waste that's not disposed of properly flows untreated through the storm drain system and directly into our local water bodies. Pet waste is a pollutant that contains nutrients, parasites and bacteria that can affect the quality of our rivers and the ocean and make the water unsafe for swimming, drinking or fishing.

BAG IT AND TRASH IT

It's that simple to protect our health and the environment!

- Keep a supply of bags near your dog leash or tie them to the leash
- Use a poop scooper
- Bring several plastic bags with you
- Reuse plastic grocery bags or purchase special doggie waste bags at pet supplies stores
- Make sure your pet's waste gets into a trash can

Encourage your neighbors and other pet owners to do the right thing and pick up after their pets.

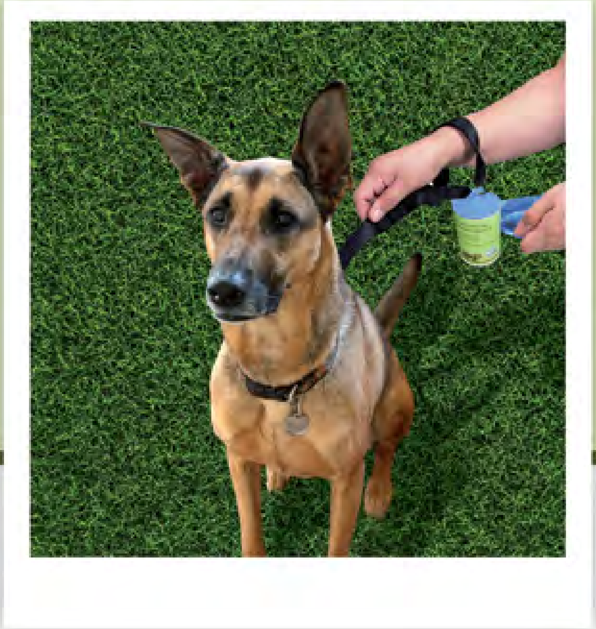

Si desea más información, visite
sbcountystormwater.org/dog

facebook.com/sbcountystormwater

Big Bear • Chino • Chino Hills • Colton • Fontana • Grand Terrace • Highland • Loma Linda • Montclair • Ontario • Rancho Cucamonga • Redlands • Rialto • San Bernardino • San Bernardino County • San Bernardino County Flood Control District • Upland • Yucaipa

¡RECOJA los desechos de sus mascotas!

Proteja la salud de su mascota y el medio ambiente

SAN BERNARDINO COUNTY STORMWATER PROGRAM
WHERE WATER MEETS COMMUNITY

POR QUÉ ES IMPORTANTE

PROTEJA
A SU FAMILIA Y A SU MASCOTA

- Los desechos de los perros pueden infectar a niños y adultos con enfermedades causadas por bacterias y parásitos.
- Su perro puede contraer una infección de los desechos de otros perros.

PROTEJA
EL MEDIO AMBIENTE

Dejar desechos de perros en la calle o en su propiedad puede tener un impacto negativo en la calidad del agua. Los desechos de mascotas que no se eliminan de la propiedad fluyen sin tratamiento por el sistema de drenaje de tormentas y llegan directamente a las masas de agua locales. Los desechos de mascotas son agentes contaminantes que contienen nutrientes, parásitos y bacterias que pueden afectar la calidad de nuestros ríos y océanos, y hacer que el agua no sea segura para nadar, beber o pescar.

COLÓQUELA EN UNA BOLSA Y TÍRELA EN LA BASURA

Así de simple es proteger nuestra salud y el medio ambiente.

- Guarde algunas bolsas cerca de la correa de su perro o átelas a la correa;
- Use una cuchara para recojer el desecho;
- Lleve varias bolsas plásticas;
- Reutilice bolsas plásticas de comestibles o compre bolsas especiales para desechos de perros en las tiendas para mascotas;
- Asegúrese de tirar los desechos de su perro en un cesto de basura.

Aliente a sus vecinos y otros dueños de mascotas a hacer lo correcto y levantar los desechos de sus mascotas.

Safer Alternative Products SC-35

Description

Promote the use of less harmful products and products that contain little or no TMDL pollutants. Alternatives exist for most product classes including chemical fertilizers, pesticides, cleaning solutions, janitorial chemicals, automotive and paint products, and consumables (batteries, fluorescent lamps).

Approach

Pattern a new program after the many established programs around the state and country. Integrate this best management practice as much as possible with existing programs at your facility.

Develop a comprehensive program based on:

- The "Precautionary Principle," which is an alternative to the "Risk Assessment" model that says it's acceptable to use a potentially harmful product until physical evidence of its harmful effects are established and deemed too costly from an environmental or public health perspective. For instance, a risk assessment approach might say it's acceptable to use a pesticide until there is direct proof of an environmental impact. The Precautionary Principle approach is used to evaluate whether a given product is safe, whether it is really necessary, and whether alternative products would perform just as well.
- Environmentally Preferable Purchasing Program to minimize the purchase of products containing hazardous ingredients used in the facility's custodial services, fleet maintenance, and facility maintenance in favor of using alternate products that pose less risk to employees and to the environment.
- Integrated Pest Management (IPM) or Less-Toxic Pesticide Program, which uses a pest management approach that minimizes the use of toxic chemicals and gets rid of pests by methods that pose a lower risk to employees, the public, and the environment.
- Energy Efficiency Program including no-cost and low-cost energy conservation and efficiency actions that can reduce both energy consumption and electricity bills, along with long-term energy efficiency investments.

Consider the following mechanisms for developing and implementing a comprehensive program:

- Policies

Objectives

- Educate
- Reduce/Minimize
- Product Substitution

Targeted Constituents

Sediment	
Nutrients	✓
Trash	
Metals	✓
Bacteria	
Oil and Grease	✓
Organics	✓

CASQA
California Stormwater Quality Association

- Procedures
  - Standard operating procedures (SOPs)
  - Purchasing guidelines and procedures
  - Bid packages (services and supplies)
- Materials
  - Preferred or approved product and supplier lists
  - Product and supplier evaluation criteria
  - Training sessions and manuals
  - Fact sheets for employees

Implement this BMP in conjunction with the Vehicle and Equipment Management fact sheets (SC20 – SC22) and SC41, Building and Grounds Maintenance.

Training

- Employees who handle potentially harmful materials in the use of safer alternatives.
- Purchasing departments should be encouraged to procure less hazardous materials and products that contain little or no harmful substances or TMDL pollutants.

Regulations

This BMP has no regulatory requirements. Existing regulations already encourage facilities to reduce the use of hazardous materials through incentives such as reduced:

- Specialized equipment storage and handling requirements,
- Storm water runoff sampling requirements,
- Training and licensing requirements, and
- Record keeping and reporting requirements.

Equipment

- There are no major equipment requirements to this BMP.

Limitations

- Alternative products may not be available, suitable, or effective in every case.

Requirements

Cost Considerations

- The primary cost is for staff time to: 1) develop new policies and procedures and 2) educate purchasing departments and employees who handle potentially harmful materials about the availability, procurement, and use of safer alternatives.

- Some alternative products may be slightly more expensive than conventional products.

Supplemental Information

Employees and contractors / service providers can both be educated about safer alternatives by using information developed by a number of organizations including the references and resources listed below.

The following discussion provides some general information on safer alternatives. More specific information on particular hazardous materials and the available alternatives may be found in the references and resources listed below.

- Automotive products – Less toxic alternatives are not available for many automotive products, especially engine fluids. But there are alternatives to grease lubricants, car polishes, degreasers, and windshield washer solution. Rerefined motor oil is also available.
- Vehicle/Trailer lnbrication – Fifth wheel bearings on trucks require routine lubrication. Adhesive lubricants are available to replace typical chassis grease.
- Cleaners – Vegetables-based or citrus-based soaps are available to replace petroleum-based soaps/detergents.
- Paint products – Water-based paints, wood preservatives, stains, and finishes are available.
- Pesticides – Specific alternative products or methods exist to control most insects, fungi, and weeds.
- Chemical Fertilizers – Compost and soil amendments are natural alternatives.
- Consumables – Manufacturers have either reduced or are in the process of reducing the amount of heavy metals in consumables such as batteries and fluorescent lamps. All fluorescent lamps contain mercury, however low-mercury containing lamps are now available from most hardware and lighting stores. Fluorescent lamps are also more energy efficient than the average incandescent lamp.
- Janitorial chemicals – Even biodegradable soap can harm fish and wildlife before it biodegrades. Biodegradable does not mean non-toxic. Safer products and procedures are available for floor stripping and cleaning, as well as carpet, glass, metal, and restroom cleaning and disinfecting.

Examples

There are a number of business and trade associations, and communities with effective programs. Some of the more prominent are listed below in the references and resources section.

References and Resources

Note: Many of these references provide alternative products for materials that typically are used inside and disposed to the sanitary sewer as well as alternatives to products that usually end up in the storm drain.

General Sustainable Practices and Pollution Prevention Including Pollutant-Specific Information

California Department of Toxic Substances Control (www.dtsc.ca.gov)

California Integrated Waste Management Board (www.ciwmb.ca.gov)

City of Santa Monica (www.santa-monica.org/environment)

City of Palo Alto (www.city.palo-alto.ca.us/cleanbay)

City and County of San Francisco, Department of the Environment (www.ci.sf.ca.us/sfenvironment)

Earth 911 (www.earth911.org/master.asp)

Environmental Finance Center Region IX (www.greenstart.org/efc9)

Flex Your Power (www.flexyourpower.ca.gov)

GreenBiz.com (www.greenbiz.com)

Green Business Program (www.abag.org/bayarea/enviro/gbus/gb.html)

Pacific Industrial and Business Association (www.piba.org)

Sacramento Clean Water Business Partners (www.sacstormwater.org)

USEPA BMP fact sheet – Alternative products (http://cfpub.epa.gov/npdes/stormwater/menuofbmps/poll_2.cfm)

USEPA Region IX Pollution Prevention Program (www.epa.gov/region09/p2)

Western Regional Pollution Prevention Network (www.westp2net.org)

Metals (mercury, copper)

National Electrical Manufacturers Association - Environment, Health and Safety (www.nema.org)

Sustainable Conservation (www.suscon.org)

  Auto Recycling Project

  Brake Pad Partnership

Pesticides and Chemical Fertilizers

Bio-Integral Resource Center (www.birc.org)

California Department of Pesticide Regulation (www.cdpr.ca.gov)

University of California Statewide IPM Program (www.ipm.ucdavis.edu/default.html)

Dioxins

Bay Area Dioxins Project (http://dioxin.abag.ca.gov/)

Building & Grounds Maintenance SC-41

Description

Stormwater runoff from building and grounds maintenance activities can be contaminated with toxic hydrocarbons in solvents, fertilizers and pesticides, suspended solids, heavy metals, abnormal pH, and oils and greases. Utilizing the protocols in this fact sheet will prevent or reduce the discharge of pollutants to stormwater from building and grounds maintenance activities by washing and cleaning up with as little water as possible, following good landscape management practices, preventing and cleaning up spills immediately, keeping debris from entering the storm drains, and maintaining the stormwater collection system.

Approach

Reduce potential for pollutant discharge through source control pollution prevention and BMP implementation. Successful implementation depends on effective training of employees on applicable BMPs and general pollution prevention strategies and objectives.

Pollution Prevention

- Switch to non-toxic chemicals for maintenance when possible.
- Choose cleaning agents that can be recycled.
- Encourage proper lawn management and landscaping, including use of native vegetation.

Objectives

- Cover
- Contain
- Educate
- Reduce/Minimize
- Product Substitution

Targeted Constituents

Sediment	✓
Nutrients	✓
Trash	
Metals	✓
Bacteria	✓
Oil and Grease	
Organics	

CASQA
California Stormwater Quality Association

- Encourage use of Integrated Pest Management techniques for pest control.
- Encourage proper onsite recycling of yard trimmings.
- Recycle residual paints, solvents, lumber, and other material as much as possible.

Suggested Protocols

Pressure Washing of Buildings, Rooftops, and Other Large Objects

- In situations where soaps or detergents are used and the surrounding area is paved, pressure washers must use a water collection device that enables collection of wash water and associated solids. A sump pump, wet vacuum or similarly effective device must be used to collect the runoff and loose materials. The collected runoff and solids must be disposed of properly.
- If soaps or detergents are not used, and the surrounding area is paved, wash runoff does not have to be collected but must be screened. Pressure washers must use filter fabric or some other type of screen on the ground and/or in the catch basin to trap the particles in wash water runoff.
- If you are pressure washing on a grassed area (with or without soap), runoff must be dispersed as sheet flow as much as possible, rather than as a concentrated stream. The wash runoff must remain on the grass and not drain to pavement.

Landscaping Activities

- Dispose of grass clippings, leaves, sticks, or other collected vegetation as garbage, or by composting. Do not dispose of collected vegetation into waterways or storm drainage systems.
- Use mulch or other erosion control measures on exposed soils.

Building Repair, Remodeling, and Construction

- Do not dump any toxic substance or liquid waste on the pavement, the ground, or toward a storm drain.
- Use ground or drop cloths underneath outdoor painting, scraping, and sandblasting work, and properly dispose of collected material daily.
- Use a ground cloth or oversized tub for activities such as paint mixing and tool cleaning.
- Clean paintbrushes and tools covered with water-based paints in sinks connected to sanitary sewers or in portable containers that can be dumped into a sanitary sewer drain. Brushes and tools covered with non-water-based paints, finishes, or other materials must be cleaned in a manner that enables collection of used solvents (e.g., paint thinner, turpentine, etc.) for recycling or proper disposal.
- Use a storm drain cover, filter fabric, or similarly effective runoff control mechanism if dust, grit, wash water, or other pollutants may escape the work area and enter a catch basin. This is particularly necessary on rainy days. The containment device(s) must be in place at the beginning of the work day, and accumulated dirty runoff and solids must be collected and disposed of before removing the containment device(s) at the end of the work day.

- If you need to de-water an excavation site, you may need to filter the water before discharging to a catch basin or off-site. If directed off-site, you should direct the water through hay bales and filter fabric or use other sediment filters or traps.

- Store toxic material under cover during precipitation events and when not in use. A cover would include tarps or other temporary cover material.

Mowing, Trimming, and Planting

- Dispose of leaves, sticks, or other collected vegetation as garbage, by composting or at a permitted landfill. Do not dispose of collected vegetation into waterways or storm drainage systems.

- Use mulch or other erosion control measures when soils are exposed.

- Place temporarily stockpiled material away from watercourses and drain inlets, and berm or cover stockpiles to prevent material releases to the storm drain system.

- Consider an alternative approach when bailing out muddy water: do not put it in the storm drain; pour over landscaped areas.

- Use hand weeding where practical.

Fertilizer and Pesticide Management

- Follow all federal, state, and local laws and regulations governing the use, storage, and disposal of fertilizers and pesticides and training of applicators and pest control advisors.

- Use less toxic pesticides that will do the job when applicable. Avoid use of copper-based pesticides if possible.

- Do not use pesticides if rain is expected.

- Do not mix or prepare pesticides for application near storm drains.

- Use the minimum amount needed for the job.

- Calibrate fertilizer distributors to avoid excessive application.

- Employ techniques to minimize off-target application (e.g., spray drift) of pesticides, including consideration of alternative application techniques.

- Apply pesticides only when wind speeds are low.

- Fertilizers should be worked into the soil rather than dumped or broadcast onto the surface.

- Irrigate slowly to prevent runoff and then only as much as is needed.

- Clean pavement and sidewalk if fertilizer is spilled on these surfaces before applying irrigation water.

- Dispose of empty pesticide containers according to the instructions on the container label.

- Use up the pesticides. Rinse containers, and use rinse water as product. Dispose of unused pesticide as hazardous waste.

- Implement storage requirements for pesticide products with guidance from the local fire department and County Agricultural Commissioner. Provide secondary containment for pesticides.

Inspection

- Inspect irrigation system periodically to ensure that the right amount of water is being applied and that excessive runoff is not occurring. Minimize excess watering and repair leaks in the irrigation system as soon as they are observed.

Training

- Educate and train employees on pesticide use and in pesticide application techniques to prevent pollution.

- Train employees and contractors in proper techniques for spill containment and cleanup.

- Be sure the frequency of training takes into account the complexity of the operations and the nature of the staff.

Spill Response and Prevention

- Keep your Spill Prevention Control and Countermeasure (SPCC) Plan up-to-date.

- Place a stockpile of spill cleanup materials, such as brooms, dustpans, and vacuum sweepers (if desired) near the storage area where it will be readily accessible.

- Have employees trained in spill containment and cleanup present during the loading/unloading of dangerous wastes, liquid chemicals, or other materials.

- Familiarize employees with the Spill Prevention Control and Countermeasure Plan.

- Clean up spills immediately.

Other Considerations

Alternative pest/weed controls may not be available, suitable, or effective in many cases.

Requirements

Costs

- Cost will vary depending on the type and size of facility.

- Overall costs should be low in comparison to other BMPs.

Maintenance

Sweep paved areas regularly to collect loose particles. Wipe up spills with rags and other absorbent material immediately, do not hose down the area to a storm drain.

Supplemental Information

Further Detail of the BMP

Fire Sprinkler Line Flushing

Building fire sprinkler line flushing may be a source of non-stormwater runoff pollution. The water entering the system is usually potable water, though in some areas it may be non-potable reclaimed wastewater. There are subsequent factors that may drastically reduce the quality of the water in such systems. Black iron pipe is usually used since it is cheaper than potable piping, but it is subject to rusting and results in lower quality water. Initially, the black iron pipe has an oil coating to protect it from rusting between manufacture and installation; this will contaminate the water from the first flush but not from subsequent flushes. Nitrates, poly-phosphates and other corrosion inhibitors, as well as fire suppressants and antifreeze may be added to the sprinkler water system. Water generally remains in the sprinkler system a long time (typically a year) and between flushes may accumulate iron, manganese, lead, copper, nickel, and zinc. The water generally becomes anoxic and contains living and dead bacteria and breakdown products from chlorination. This may result in a significant BOD problem and the water often smells. Consequently dispose fire sprinkler line flush water into the sanitary sewer. Do not allow discharge to storm drain or infiltration due to potential high levels of pollutants in fire sprinkler line water.

References and Resources

California's Nonpoint Source Program Plan http://www.swrcb.ca.gov/nps/index.html

Clark County Storm Water Pollution Control Manual
http://www.co.clark.wa.us/pubworks/bmpman.pdf

King County Storm Water Pollution Control Manual http://dnr.metrokc.gov/wlr/dss/spcm.htm

Mobile Cleaners Pilot Program: Final Report. 1997. Bay Area Stormwater Management Agencies Association (BASMAA). http://www.basmaa.org/

Pollution from Surface Cleaning Folder. 1996. Bay Area Stormwater Management Agencies Association (BASMAA). http://www.basmaa.org/

Santa Clara Valley Urban Runoff Pollution Prevention Program http://www.scvurppp.org

The Storm Water Managers Resource Center http://www.stormwatercenter.net/

Building Repair and Construction SC-42

Objectives

- Cover
- Contain
- Educate
- Reduce/Minimize
- Recycle

Targeted Constituents

Sediment	✓
Nutrients	
Trash	✓
Metals	✓
Bacteria	
Oil and Grease	✓
Organics	✓

Description

Modifications are common particularly at large industrial sites. The activity may vary from minor and normal building repair to major remodeling, or the construction of new facilities. These activities can generate pollutants including solvents, paints, paint and varnish removers, finishing residues, spent thinners, soap cleaners, kerosene, asphalt and concrete materials, adhesive residues, and old asbestos installation. Protocols in this fact sheet are intended to prevent or reduce the discharge of pollutants to stormwater from building repair, remodeling, and construction by using soil erosion controls, enclosing or covering building material storage areas, using good housekeeping practices, using safer alternative products, and training employees.

Approach

Pollution Prevention

- Recycle residual paints, solvents, lumber, and other materials to the maximum extent practical.

- Buy recycled products to the maximum extent practical.

- Inform on-site contractors of company policy on these matters and include appropriate provisions in their contract to ensure certain proper housekeeping and disposal practices are implemented.

CASQA
California
Stormwater
Quality
Association

- Make sure that nearby storm drains are well marked to minimize the chance of inadvertent disposal of residual paints and other liquids.

Suggested Protocols

Repair & Remodeling

- Follow BMPs identified in Construction BMP Handbook.
- Maintain good housekeeping practices while work is underway.
- Keep the work site clean and orderly. Remove debris in a timely fashion. Sweep the area.
- Cover materials of particular concern that must be left outside, particularly during the rainy season.
- Do not dump waste liquids down the storm drain.
- Dispose of wash water, sweepings, and sediments properly.
- Store materials properly that are normally used in repair and remodeling such as paints and solvents.
- Sweep out the gutter or wash the gutter and trap the particles at the outlet of the downspout if when repairing roofs, small particles have accumulated in the gutter. A sock or geofabric placed over the outlet may effectively trap the materials. If the downspout is tight lined, place a temporary plug at the first convenient point in the storm drain and pump out the water with a vactor truck, and clean the catch basin sump where you placed the plug.
- Properly store and dispose waste materials generated from construction activities. See Construction BMP Handbook.
- Clean the storm drain system in the immediate vicinity of the construction activity after it is completed.

Painting

- Enclose painting operations consistent with local air quality regulations and OSHA.
- Local air pollution regulations may, in many areas of the state, specify painting procedures which if properly carried out are usually sufficient to protect water quality.
- Develop paint handling procedures for proper use, storage, and disposal of paints.
- Transport paint and materials to and from job sites in containers with secure lids and tied down to the transport vehicle.
- Test and inspect spray equipment prior to starting to paint. Tighten all hoses and connections and do not overfill paint containers.
- Mix paint indoors before using so that any spill will not be exposed to rain. Do so even during dry weather because cleanup of a spill will never be 100% effective.
- Transfer and load paint and hot thermoplastic away from storm drain inlets.

- Do not transfer or load paint near storm drain inlets.
- Plug nearby storm drain inlets prior to starting painting and remove plugs when job is complete when there is significant risk of a spill reaching storm drains.
- Cover nearby storm drain inlets prior to starting work if sand blasting is used to remove paint.
- Use a ground cloth to collect the chips if painting requires scraping or sand blasting of the existing surface. Dispose the residue properly.
- Cover or enclose painting operations properly to avoid drift.
- Clean the application equipment in a sink that is connected to the sanitary sewer if using water based paints.
- Capture all cleanup-water and dispose of properly.
- Dispose of paints containing lead or tributyl tin and considered a hazardous waste properly.
- Store leftover paints if they are to be kept for the next job properly, or dispose properly.
- Recycle paint when possible. Dispose of paint at an appropriate household hazardous waste facility.

Training

Proper education of off-site contractors is often overlooked. The conscientious efforts of well trained employees can be lost by unknowing off-site contractors, so make sure they are well informed about what they are expected to do.

Spill Response and Prevention

- Keep your Spill Prevention Control and Countermeasure (SPCC) Plan up-to-date.
- Place a stockpile of spill cleanup materials where it will be readily accessible.
- Clean up spills immediately.
- Excavate and remove the contaminated (stained) soil if a spill occurs on dirt.

Limitations

- This BMP is for minor construction only. The State's General Construction Activity Stormwater Permit has more requirements for larger projects. The companion "Construction Best Management Practice Handbook" contains specific guidance and best management practices for larger-scale projects.
- Hazardous waste that cannot be reused or recycled must be disposed of by a licensed hazardous waste hauler.
- Be certain that actions to help stormwater quality are consistent with Cal- and Fed-OSHA and air quality regulations.

Requirements

Costs

These BMPs are generally low to modest in cost.

Maintenance

N/A

Supplemental Information

Further Detail of the BMP

Soil/Erosion Control

If the work involves exposing large areas of soil, employ the appropriate soil erosion and control techniques. See the Construction Best Management Practice Handbook. If old buildings are being torn down and not replaced in the near future, stabilize the site using measures described in SC-40 Contaminated or Erodible Areas.

If a building is to be placed over an open area with a storm drainage system, make sure the storm inlets within the building are covered or removed, or the storm line is connected to the sanitary sewer. If because of the remodeling a new drainage system is to be installed or the existing system is to be modified, consider installing catch basins as they serve as effective "in-line" treatment devices. See Treatment Control Fact Sheet TC-20 Wet Pond/Basin in Section 5 of the New Development and Redevelopment Handbook regarding design criteria. Include in the catch basin a "turn-down" elbow or similar device to trap floatables.

References and Resources

California's Nonpoint Source Program Plan http://www.swrcb.ca.gov/nps/index.html

Clark County Storm Water Pollution Control Manual
http://www.co.clark.wa.us/pubworks/bmpman.pdf

King County Storm Water Pollution Control Manual http://dnr.metrokc.gov/wlr/dss/spcm.htm

Santa Clara Valley Urban Runoff Pollution Prevention Program http://www.scvurppp.org

The Storm Water Managers Resource Center http://www.stormwatercenter.net/

Parking/Storage Area Maintenance SC-43

Objectives

- Cover
- Contain
- Educate
- Reduce/Minimize
- Product Substitution

Targeted Constituents

Sediment	✓
Nutrients	
Trash	✓
Metals	✓
Bacteria	
Oil and Grease	✓
Organics	✓

Description

Parking lots and storage areas can contribute a number of substances, such as trash, suspended solids, hydrocarbons, oil and grease, and heavy metals that can enter receiving waters through stormwater runoff or non-stormwater discharges. The protocols in this fact sheet are intended to prevent or reduce the discharge of pollutants from parking/storage areas and include using good housekeeping practices, following appropriate cleaning BMPs, and training employees.

Approach

The goal of this program is to ensure stormwater pollution prevention practices are considered when conducting activities on or around parking areas and storage areas to reduce potential for pollutant discharge to receiving waters. Successful implementation depends on effective training of employees on applicable BMPs and general pollution prevention strategies and objectives.

Pollution Prevention

- Encourage alternative designs and maintenance strategies for impervious parking lots. (See New Development and Redevelopment BMP Handbook)
- Keep accurate maintenance logs to evaluate BMP implementation.

CASQA California Stormwater Quality Association

SC-43 Parking/Storage Area Maintenance

Suggested Protocols

General

- Keep the parking and storage areas clean and orderly. Remove debris in a timely fashion.
- Allow sheet runoff to flow into biofilters (vegetated strip and swale) and/or infiltration devices.
- Utilize sand filters or oleophilic collectors for oily waste in low quantities.
- Arrange rooftop drains to prevent drainage directly onto paved surfaces.
- Design lot to include semi-permeable hardscape.
- Discharge soapy water remaining in mop or wash buckets to the sanitary sewer through a sink, toilet, clean-out, or wash area with drain.

Controlling Litter

- Post "No Littering" signs and enforce anti-litter laws.
- Provide an adequate number of litter receptacles.
- Clean out and cover litter receptacles frequently to prevent spillage.
- Provide trash receptacles in parking lots to discourage litter.
- Routinely sweep, shovel, and dispose of litter in the trash.

Surface Cleaning

- Use dry cleaning methods (e.g., sweeping, vacuuming) to prevent the discharge of pollutants into the stormwater conveyance system if possible.
- Establish frequency of public parking lot sweeping based on usage and field observations of waste accumulation.
- Sweep all parking lots at least once before the onset of the wet season.
- Follow the procedures below if water is used to clean surfaces:
  - Block the storm drain or contain runoff.
  - Collect and pump wash water to the sanitary sewer or discharge to a pervious surface. Do not allow wash water to enter storm drains.
  - Dispose of parking lot sweeping debris and dirt at a landfill.
- Follow the procedures below when cleaning heavy oily deposits:
  - Clean oily spots with absorbent materials.
  - Use a screen or filter fabric over inlet, then wash surfaces.

  - Do not allow discharges to the storm drain.
  - Vacuum/pump discharges to a tank or discharge to sanitary sewer.
  - Appropriately dispose of spilled materials and absorbents.

Surface Repair

- Preheat, transfer or load hot bituminous material away from storm drain inlets.
- Apply concrete, asphalt, and seal coat during dry weather to prevent contamination from contacting stormwater runoff.
- Cover and seal nearby storm drain inlets where applicable (with waterproof material or mesh) and manholes before applying seal coat, slurry seal, etc. Leave covers in place until job is complete and all water from emulsified oil sealants has drained or evaporated. Clean any debris from these covered manholes and drains for proper disposal.
- Use only as much water as necessary for dust control, to avoid runoff.
- Catch drips from paving equipment that is not in use with pans or absorbent material placed under the machines. Dispose of collected material and absorbents properly.

Inspection

- Have designated personnel conduct inspections of parking facilities and stormwater conveyance systems associated with parking facilities on a regular basis.
- Inspect cleaning equipment/sweepers for leaks on a regular basis.

Training

- Provide regular training to field employees and/or contractors regarding cleaning of paved areas and proper operation of equipment.
- Train employees and contractors in proper techniques for spill containment and cleanup.

Spill Response and Prevention

- Keep your Spill Prevention Control and Countermeasure (SPCC) Plan up-to-date.
- Place a stockpile of spill cleanup materials where it will be readily accessible or at a central location.
- Clean up fluid spills immediately with absorbent rags or material.
- Dispose of spilled material and absorbents properly.

Other Considerations

Limitations related to sweeping activities at large parking facilities may include high equipment costs, the need for sweeper operator training, and the inability of current sweeper technology to remove oil and grease.

SC-43 Parking/Storage Area Maintenance

Requirements

Costs

Cleaning/sweeping costs can be quite large. Construction and maintenance of stormwater structural controls can be quite expensive as well.

Maintenance

- Sweep parking lot regularly to minimize cleaning with water.
- Clean out oil/water/sand separators regularly, especially after heavy storms.
- Clean parking facilities regularly to prevent accumulated wastes and pollutants from being discharged into conveyance systems during rainy conditions.

Supplemental Information

Further Detail of the BMP

Surface Repair

Apply concrete, asphalt, and seal coat during dry weather to prevent contamination from contacting stormwater runoff. Where applicable, cover and seal nearby storm drain inlets (with waterproof material or mesh) and manholes before applying seal coat, slurry seal, etc. Leave covers in place until job is complete and all water from emulsified oil sealants has drained or evaporated. Clean any debris from these covered manholes and drains for proper disposal. Only use only as much water as is necessary for dust control to avoid runoff.

References and Resources

California's Nonpoint Source Program Plan http://www.swrcb.ca.gov/nps/index.html

Clark County Storm Water Pollution Control Manual http://www.co.clark.wa.us/pubworks/bmpman.pdf

King County Storm Water Pollution Control Manual http://dnr.metrokc.gov/wlr/dss/spcm.htm

Pollution from Surface Cleaning Folder. 1996. Bay Area Stormwater Management Agencies Association (BASMAA). http://www.basmaa.org/

Oregon Association of Clean Water Agencies. Oregon Municipal Stormwater Toolbox for Maintenance Practices. June 1998.

Santa Clara Valley Urban Runoff Pollution Prevention Program http://www.scvurppp.org

The Storm Water Managers Resource Center http://www.stormwatercenter.net/

Drainage System Maintenance SC-44

Objectives

- Cover
- Contain
- Educate
- Reduce/Minimize

Targeted Constituents

Sediment	✓
Nutrients	
Trash	✓
Metals	
Bacteria	✓
Oil and Grease	
Organics	

CASQA
California Stormwater Quality Association

Description

As a consequence of its function, the stormwater conveyance system collects and transports urban runoff and stormwater that may contain certain pollutants. The protocols in this fact sheet are intended to reduce pollutants reaching receiving waters through proper conveyance system operation and maintenance.

Approach

Pollution Prevention

Maintain catch basins, stormwater inlets, and other stormwater conveyance structures on a regular basis to remove pollutants, reduce high pollutant concentrations during the first flush of storms, prevent clogging of the downstream conveyance system, restore catch basins' sediment trapping capacity, and ensure the system functions properly hydraulically to avoid flooding.

Suggested Protocols

Catch Basins/Inlet Structures

- Staff should regularly inspect facilities to ensure compliance with the following:
  - Immediate repair of any deterioration threatening structural integrity.
  - Cleaning before the sump is 40% full. Catch basins should be cleaned as frequently as needed to meet this standard.
  - Stenciling of catch basins and inlets (see SC34 Waste Handling and Disposal).

- Clean catch basins, storm drain inlets, and other conveyance structures before the wet season to remove sediments and debris accumulated during the summer.

- Conduct inspections more frequently during the wet season for problem areas where sediment or trash accumulates more often. Clean and repair as needed.

- Keep accurate logs of the number of catch basins cleaned.

- Store wastes collected from cleaning activities of the drainage system in appropriate containers or temporary storage sites in a manner that prevents discharge to the storm drain.

- Dewater the wastes if necessary with outflow into the sanitary sewer if permitted. Water should be treated with an appropriate filtering device prior to discharge to the sanitary sewer. If discharge to the sanitary sewer is not allowed, water should be pumped or vacuumed to a tank and properly disposed. Do not dewater near a storm drain or stream.

Storm Drain Conveyance System

- Locate reaches of storm drain with deposit problems and develop a flushing schedule that keeps the pipe clear of excessive buildup.

- Collect and pump flushed effluent to the sanitary sewer for treatment whenever possible.

Pump Stations

- Clean all storm drain pump stations prior to the wet season to remove silt and trash.

- Do not allow discharge to reach the storm drain system when cleaning a storm drain pump station or other facility.

- Conduct routine maintenance at each pump station.

- Inspect, clean, and repair as necessary all outlet structures prior to the wet season.

Open Channel

- Modify storm channel characteristics to improve channel hydraulics, increase pollutant removals, and enhance channel/creek aesthetic and habitat value.

- Conduct channel modification/improvement in accordance with existing laws. Any person, government agency, or public utility proposing an activity that will change the natural (emphasis added) state of any river, stream, or lake in California, must enter into a Steam or Lake Alteration Agreement with the Department of Fish and Game. The developer-applicant should also contact local governments (city, county, special districts), other state agencies (SWRCB, RWQCB, Department of Forestry, Department of Water Resources), and Federal Corps of Engineers and USFWS.

Illicit Connections and Discharges

- Look for evidence of illegal discharges or illicit connections during routine maintenance of conveyance system and drainage structures:

  - Is there evidence of spills such as paints, discoloring, etc?

  - Are there any odors associated with the drainage system?
  - Record locations of apparent illegal discharges/illicit connections?
  - Track flows back to potential dischargers and conduct aboveground inspections. This can be done through visual inspection of upgradient manholes or alternate techniques including zinc chloride smoke testing, fluorometric dye testing, physical inspection testing, or television camera inspection.
  - Eliminate the discharge once the origin of flow is established.

- Stencil or demarcate storm drains, where applicable, to prevent illegal disposal of pollutants. Storm drain inlets should have messages such as "Dump No Waste Drains to Stream" stenciled next to them to warn against ignorant or intentional dumping of pollutants into the storm drainage system.
- Refer to fact sheet SC-10 Non-Stormwater Discharges.

Illegal Dumping

- Inspect and clean up hot spots and other storm drainage areas regularly where illegal dumping and disposal occurs.
- Establish a system for tracking incidents. The system should be designed to identify the following:
  - Illegal dumping hot spots
  - Types and quantities (in some cases) of wastes
  - Patterns in time of occurrence (time of day/night, month, or year)
  - Mode of dumping (abandoned containers, "midnight dumping" from moving vehicles, direct dumping of materials, accidents/spills)
  - Responsible parties
- Post "No Dumping" signs in problem areas with a phone number for reporting dumping and disposal. Signs should also indicate fines and penalties for illegal dumping.
- Refer to fact sheet SC-10 Non-Stormwater Discharges.

Training

- Train crews in proper maintenance activities, including record keeping and disposal.
- Allow only properly trained individuals to handle hazardous materials/wastes.
- Have staff involved in detection and removal of illicit connections trained in the following:
  - OSHA-required Health and Safety Training (29 CFR 1910.120) plus annual refresher training (as needed).

  - OSHA Confined Space Entry training (Cal-OSHA Confined Space, Title 8 and Federal OSHA 29 CFR 1910.146).

  - Procedural training (field screening, sampling, smoke/dye testing, TV inspection).

Spill Response and Prevention

- Investigate all reports of spills, leaks, and/or illegal dumping promptly.

- Clean up all spills and leaks using "dry" methods (with absorbent materials and/or rags) or dig up, remove, and properly dispose of contaminated soil.

- Refer to fact sheet SC-11 Spill Prevention, Control, and Cleanup.

Other Considerations (Limitations and Regulations)

- Clean-up activities may create a slight disturbance for local aquatic species. Access to items and material on private property may be limited. Trade-offs may exist between channel hydraulics and water quality/riparian habitat. If storm channels or basins are recognized as wetlands, many activities, including maintenance, may be subject to regulation and permitting.

- Storm drain flushing is most effective in small diameter pipes (36-inch diameter pipe or less, depending on water supply and sediment collection capacity). Other considerations associated with storm drain flushing may include the availability of a water source, finding a downstream area to collect sediments, liquid/sediment disposal, and prohibition against disposal of flushed effluent to sanitary sewer in some areas.

- Regulations may include adoption of substantial penalties for illegal dumping and disposal.

- Local municipal codes may include sections prohibiting discharge of soil, debris, refuse, hazardous wastes, and other pollutants into the storm drain system.

Requirements

Costs

- An aggressive catch basin cleaning program could require a significant capital and O&M budget.

- The elimination of illegal dumping is dependent on the availability, convenience, and cost of alternative means of disposal. The primary cost is for staff time. Cost depends on how aggressively a program is implemented. Other cost considerations for an illegal dumping program include:

  - Purchase and installation of signs.

  - Rental of vehicle(s) to haul illegally-disposed items and material to landfills.

  - Rental of heavy equipment to remove larger items (e.g., car bodies) from channels.

  - Purchase of landfill space to dispose of illegally-dumped items and material.

- Methods used for illicit connection detection (smoke testing, dye testing, visual inspection, and flow monitoring) can be costly and time-consuming. Site-specific factors, such as the level of impervious area, the density and ages of buildings, and type of land use will determine the level of investigation necessary.

Maintenance

- Two-person teams may be required to clean catch basins with vactor trucks.
- Teams of at least two people plus administrative personnel are required to identify illicit discharges, depending on the complexity of the storm sewer system.
- Arrangements must be made for proper disposal of collected wastes.
- Technical staff are required to detect and investigate illegal dumping violations.

Supplemental Information

Further Detail of the BMP

Storm Drain Flushing

Flushing is a common maintenance activity used to improve pipe hydraulics and to remove pollutants in storm drainage systems. Flushing may be designed to hydraulically convey accumulated material to strategic locations, such as an open channel, another point where flushing will be initiated, or the sanitary sewer and the treatment facilities, thus preventing resuspension and overflow of a portion of the solids during storm events. Flushing prevents "plug flow" discharges of concentrated pollutant loadings and sediments. Deposits can hinder the designed conveyance capacity of the storm drain system and potentially cause backwater conditions in severe cases of clogging.

Storm drain flushing usually takes place along segments of pipe with grades that are too flat to maintain adequate velocity to keep particles in suspension. An upstream manhole is selected to place an inflatable device that temporarily plugs the pipe. Further upstream, water is pumped into the line to create a flushing wave. When the upstream reach of pipe is sufficiently full to cause a flushing wave, the inflated device is rapidly deflated with the assistance of a vacuum pump, thereby releasing the backed up water and resulting in the cleaning of the storm drain segment.

To further reduce impacts of stormwater pollution, a second inflatable device placed well downstream may be used to recollect the water after the force of the flushing wave has dissipated. A pump may then be used to transfer the water and accumulated material to the sanitary sewer for treatment. In some cases, an interceptor structure may be more practical or required to recollect the flushed waters.

It has been found that cleansing efficiency of periodic flush waves is dependent upon flush volume, flush discharge rate, sewer slope, sewer length, sewer flow rate, sewer diameter, and population density. As a rule of thumb, the length of line to be flushed should not exceed 700 feet. At this maximum recommended length, the percent removal efficiency ranges between 65-75% for organics and 55-65% for dry weather grit/inorganic material. The percent removal efficiency drops rapidly beyond that. Water is commonly supplied by a water truck, but fire hydrants can also supply water. To make the best use of water, it is recommended that reclaimed water be used or that fire hydrant line flushing coincide with storm sewer flushing.

References and Resources

California's Nonpoint Source Program Plan http://www.swrcb.ca.gov/nps/index.html

Clark County Storm Water Pollution Control Manual http://www.co.clark.wa.us/pubworks/bmpman.pdf

Ferguson, B.K. 1991. Urban Stream Reclamation, p. 324-322, Journal of Soil and Water Conservation.

King County Storm Water Pollution Control Manual http://dnr.metrokc.gov/wlr/dss/spcm.htm

Oregon Association of Clean Water Agencies. Oregon Municipal Stormwater Toolbox for Maintenance Practices. June 1998.

Santa Clara Valley Urban Runoff Pollution Prevention Program http://www.scvurppp.org

The Storm Water Managers Resource Center http://www.stormwatercenter.net

United States Environmental Protection Agency (USEPA). 2002. Pollution Prevention/Good Housekeeping for Municipal Operations Storm Drain System Cleaning. On line: http://www.epa.gov/npdes/menuofbmps/poll_16.htm

Site Design & Landscape Planning SD-10

Design Objectives

✓ Maximize Infiltration

✓ Provide Retention

✓ Slow Runoff

✓ Minimize Impervious Land Coverage

Prohibit Dumping of Improper Materials

Contain Pollutants

Collect and Convey

Description

Each project site possesses unique topographic, hydrologic, and vegetative features, some of which are more suitable for development than others. Integrating and incorporating appropriate landscape planning methodologies into the project design is the most effective action that can be done to minimize surface and groundwater contamination from stormwater.

Approach

Landscape planning should couple consideration of land suitability for urban uses with consideration of community goals and projected growth. Project plan designs should conserve natural areas to the extent possible, maximize natural water storage and infiltration opportunities, and protect slopes and channels.

Suitable Applications

Appropriate applications include residential, commercial and industrial areas planned for development or redevelopment.

Design Considerations

Design requirements for site design and landscapes planning should conform to applicable standards and specifications of agencies with jurisdiction and be consistent with applicable General Plan and Local Area Plan policies.

CASQA
California Stormwater Quality Association

Designing New Installations

Begin the development of a plan for the landscape unit with attention to the following general principles:

- Formulate the plan on the basis of clearly articulated community goals. Carefully identify conflicts and choices between retaining and protecting desired resources and community growth.

- Map and assess land suitability for urban uses. Include the following landscape features in the assessment: wooded land, open unwooded land, steep slopes, erosion-prone soils, foundation suitability, soil suitability for waste disposal, aquifers, aquifer recharge areas, wetlands, floodplains, surface waters, agricultural lands, and various categories of urban land use. When appropriate, the assessment can highlight outstanding local or regional resources that the community determines should be protected (e.g., a scenic area, recreational area, threatened species habitat, farmland, fish run). Mapping and assessment should recognize not only these resources but also additional areas needed for their sustenance.

Project plan designs should conserve natural areas to the extent possible, maximize natural water storage and infiltration opportunities, and protect slopes and channels.

Conserve Natural Areas during Landscape Planning

If applicable, the following items are required and must be implemented in the site layout during the subdivision design and approval process, consistent with applicable General Plan and Local Area Plan policies:

- Cluster development on least-sensitive portions of a site while leaving the remaining land in a natural undisturbed condition.

- Limit clearing and grading of native vegetation at a site to the minimum amount needed to build lots, allow access, and provide fire protection.

- Maximize trees and other vegetation at each site by planting additional vegetation, clustering tree areas, and promoting the use of native and/or drought tolerant plants.

- Promote natural vegetation by using parking lot islands and other landscaped areas.

- Preserve riparian areas and wetlands.

Maximize Natural Water Storage and Infiltration Opportunities Within the Landscape Unit

- Promote the conservation of forest cover. Building on land that is already deforested affects basin hydrology to a lesser extent than converting forested land. Loss of forest cover reduces interception storage, detention in the organic forest floor layer, and water losses by evapotranspiration, resulting in large peak runoff increases and either their negative effects or the expense of countering them with structural solutions.

- Maintain natural storage reservoirs and drainage corridors, including depressions, areas of permeable soils, swales, and intermittent streams. Develop and implement policies and regulations to discourage the clearing, filling, and channelization of these features. Utilize them in drainage networks in preference to pipes, culverts, and engineered ditches.

- Evaluating infiltration opportunities by referring to the stormwater management manual for the jurisdiction and pay particular attention to the selection criteria for avoiding groundwater contamination, poor soils, and hydrogeological conditions that cause these facilities to fail. If necessary, locate developments with large amounts of impervious surfaces or a potential to produce relatively contaminated runoff away from groundwater recharge areas.

Protection of Slopes and Channels during Landscape Design

- Convey runoff safely from the tops of slopes.
- Avoid disturbing steep or unstable slopes.
- Avoid disturbing natural channels.
- Stabilize disturbed slopes as quickly as possible.
- Vegetate slopes with native or drought tolerant vegetation.
- Control and treat flows in landscaping and/or other controls prior to reaching existing natural drainage systems.
- Stabilize temporary and permanent channel crossings as quickly as possible, and ensure that increases in run-off velocity and frequency caused by the project do not erode the channel.
- Install energy dissipaters, such as riprap, at the outlets of new storm drains, culverts, conduits, or channels that enter unlined channels in accordance with applicable specifications to minimize erosion. Energy dissipaters shall be installed in such a way as to minimize impacts to receiving waters.
- Line on-site conveyance channels where appropriate, to reduce erosion caused by increased flow velocity due to increases in tributary impervious area. The first choice for linings should be grass or some other vegetative surface, since these materials not only reduce runoff velocities, but also provide water quality benefits from filtration and infiltration. If velocities in the channel are high enough to erode grass or other vegetative linings, riprap, concrete, soil cement, or geo-grid stabilization are other alternatives.
- Consider other design principles that are comparable and equally effective.

Redeveloping Existing Installations

Various jurisdictional stormwater management and mitigation plans (SUSMP, WQMP, etc.) define "redevelopment" in terms of amounts of additional impervious area, increases in gross floor area and/or exterior construction, and land disturbing activities with structural or impervious surfaces. The definition of " redevelopment" must be consulted to determine whether or not the requirements for new development apply to areas intended for redevelopment. If the definition applies, the steps outlined under "designing new installations" above should be followed.

Redevelopment may present significant opportunity to add features which had not previously been implemented. Examples include incorporation of depressions, areas of permeable soils, and swales in newly redeveloped areas. While some site constraints may exist due to the status of already existing infrastructure, opportunities should not be missed to maximize infiltration, slow runoff, reduce impervious areas, disconnect directly connected impervious areas.

Other Resources

A Manual for the Standard Urban Stormwater Mitigation Plan (SUSMP), Los Angeles County Department of Public Works, May 2002.

Stormwater Management Manual for Western Washington, Washington State Department of Ecology, August 2001.

Model Standard Urban Storm Water Mitigation Plan (SUSMP) for San Diego County, Port of San Diego, and Cities in San Diego County, February 14, 2002.

Model Water Quality Management Plan (WQMP) for County of Orange, Orange County Flood Control District, and the Incorporated Cities of Orange County, Draft February 2003.

Ventura Countywide Technical Guidance Manual for Stormwater Quality Control Measures, July 2002.

Efficient Irrigation SD-12

Design Objectives

- ✓ Maximize Infiltration
- ✓ Provide Retention
- ✓ Slow Runoff
- Minimize Impervious Land Coverage
- Prohibit Dumping of Improper Materials
- Contain Pollutants
- Collect and Convey

Description

Irrigation water provided to landscaped areas may result in excess irrigation water being conveyed into stormwater drainage systems.

Approach

Project plan designs for development and redevelopment should include application methods of irrigation water that minimize runoff of excess irrigation water into the stormwater conveyance system.

Suitable Applications

Appropriate applications include residential, commercial and industrial areas planned for development or redevelopment. (Detached residential single-family homes are typically excluded from this requirement.)

Design Considerations

Designing New Installations

The following methods to reduce excessive irrigation runoff should be considered, and incorporated and implemented where determined applicable and feasible by the Permittee:

- Employ rain-triggered shutoff devices to prevent irrigation after precipitation.
- Design irrigation systems to each landscape area's specific water requirements.
- Include design featuring flow reducers or shutoff valves triggered by a pressure drop to control water loss in the event of broken sprinkler heads or lines.
- Implement landscape plans consistent with County or City water conservation resolutions, which may include provision of water sensors, programmable irrigation times (for short cycles), etc.

CASQA
California Stormwater Quality Association

- Design timing and application methods of irrigation water to minimize the runoff of excess irrigation water into the storm water drainage system.

- Group plants with similar water requirements in order to reduce excess irrigation runoff and promote surface filtration. Choose plants with low irrigation requirements (for example, native or drought tolerant species). Consider design features such as:

  - Using mulches (such as wood chips or bar) in planter areas without ground cover to minimize sediment in runoff

  - Installing appropriate plant materials for the location, in accordance with amount of sunlight and climate, and use native plant materials where possible and/or as recommended by the landscape architect

  - Leaving a vegetative barrier along the property boundary and interior watercourses, to act as a pollutant filter, where appropriate and feasible

  - Choosing plants that minimize or eliminate the use of fertilizer or pesticides to sustain growth

- Employ other comparable, equally effective methods to reduce irrigation water runoff.

Redeveloping Existing Installations

Various jurisdictional stormwater management and mitigation plans (SUSMP, WQMP, etc.) define "redevelopment" in terms of amounts of additional impervious area, increases in gross floor area and/or exterior construction, and land disturbing activities with structural or impervious surfaces. The definition of " redevelopment" must be consulted to determine whether or not the requirements for new development apply to areas intended for redevelopment. If the definition applies, the steps outlined under "designing new installations" above should be followed.

Other Resources

A Manual for the Standard Urban Stormwater Mitigation Plan (SUSMP), Los Angeles County Department of Public Works, May 2002.

Model Standard Urban Storm Water Mitigation Plan (SUSMP) for San Diego County, Port of San Diego, and Cities in San Diego County, February 14, 2002.

Model Water Quality Management Plan (WQMP) for County of Orange, Orange County Flood Control District, and the Incorporated Cities of Orange County, Draft February 2003.

Ventura Countywide Technical Guidance Manual for Stormwater Quality Control Measures, July 2002.

Storm Drain Signage SD-13

Design Objectives

Maximize Infiltration

Provide Retention

Slow Runoff

Minimize Impervious Land Coverage

☑ Prohibit Dumping of Improper Materials

Contain Pollutants

Collect and Convey

Description

Waste materials dumped into storm drain inlets can have severe impacts on receiving and ground waters. Posting notices regarding discharge prohibitions at storm drain inlets can prevent waste dumping. Storm drain signs and stencils are highly visible source controls that are typically placed directly adjacent to storm drain inlets.

Approach

The stencil or affixed sign contains a brief statement that prohibits dumping of improper materials into the urban runoff conveyance system. Storm drain messages have become a popular method of alerting the public about the effects of and the prohibitions against waste disposal.

Suitable Applications

Stencils and signs alert the public to the destination of pollutants discharged to the storm drain. Signs are appropriate in residential, commercial, and industrial areas, as well as any other area where contributions or dumping to storm drains is likely.

Design Considerations

Storm drain message markers or placards are recommended at all storm drain inlets within the boundary of a development project. The marker should be placed in clear sight facing toward anyone approaching the inlet from either side. All storm drain inlet locations should be identified on the development site map.

Designing New Installations

The following methods should be considered for inclusion in the project design and show on project plans:

- Provide stenciling or labeling of all storm drain inlets and catch basins, constructed or modified, within the project area with prohibitive language. Examples include "NO DUMPING

CASQA
CALIFORNIA STORMWATER QUALITY ASSOCIATION

– DRAINS TO OCEAN" and/or other graphical icons to discourage illegal dumping.

- Post signs with prohibitive language and/or graphical icons, which prohibit illegal dumping at public access points along channels and creeks within the project area.

Note - Some local agencies have approved specific signage and/or storm drain message placards for use. Consult local agency stormwater staff to determine specific requirements for placard types and methods of application.

Redeveloping Existing Installations

Various jurisdictional stormwater management and mitigation plans (SUSMP, WQMP, etc.) define "redevelopment" in terms of amounts of additional impervious area, increases in gross floor area and/or exterior construction, and land disturbing activities with structural or impervious surfaces. If the project meets the definition of "redevelopment", then the requirements stated under " designing new installations" above should be included in all project design plans.

Additional Information

Maintenance Considerations

- Legibility of markers and signs should be maintained. If required by the agency with jurisdiction over the project, the owner/operator or homeowner's association should enter into a maintenance agreement with the agency or record a deed restriction upon the property title to maintain the legibility of placards or signs.

Placement

- Signage on top of curbs tends to weather and fade.

- Signage on face of curbs tends to be worn by contact with vehicle tires and sweeper brooms.

Supplemental Information

Examples

- Most MS4 programs have storm drain signage programs. Some MS4 programs will provide stencils, or arrange for volunteers to stencil storm drains as part of their outreach program.

Other Resources

A Manual for the Standard Urban Stormwater Mitigation Plan (SUSMP), Los Angeles County Department of Public Works, May 2002.

Model Standard Urban Storm Water Mitigation Plan (SUSMP) for San Diego County, Port of San Diego, and Cities in San Diego County, February 14, 2002.

Model Water Quality Management Plan (WQMP) for County of Orange, Orange County Flood Control District, and the Incorporated Cities of Orange County, Draft February 2003.

Ventura Countywide Technical Guidauce Manual for Stormwater Quality Control Measures, July 2002.

APPENDIX L

NOAA Point Precipitation Frequency Estimate for 2 Year, 1 Hour Storm

NOAA Atlas 14, Volume 6, Version 2
Location name: Redlands, California, USA*
Latitude: 34.0629°, Longitude: -117.139°
Elevation: 1616.69 ft**

* source: ESRI Maps
** source: USGS

POINT PRECIPITATION FREQUENCY ESTIMATES

Sanja Perica, Sarah Dietz, Sarah Heim, Lillian Hiner, Kazungu Maitaria, Deborah Martin, Sandra Pavlovic, Ishani Roy, Carl Trypaluk, Dale Unruh, Fenglin Yan, Michael Yekta, Tan Zhao, Geoffrey Bonnin, Daniel Brewer, Li-Chuan Chen, Tye Parzybok, John Yarchoan

NOAA, National Weather Service, Silver Spring, Maryland

PF_tabular | PF_graphical | Maps_&_aerials

PF tabular

PDS-based point precipitation frequency estimates with 90% confidence intervals (in inches)[1]

Duration	Average recurrence interval (years)									
	1	2	5	10	25	50	100	200	500	1000
5-min	**0.104** (0.087-0.127)	**0.137** (0.114-0.167)	**0.183** (0.151-0.223)	**0.222** (0.183-0.273)	**0.279** (0.222-0.355)	**0.326** (0.253-0.423)	**0.376** (0.285-0.501)	**0.430** (0.317-0.590)	**0.509** (0.359-0.729)	**0.575** (0.392-0.852)
10-min	**0.149** (0.124-0.181)	**0.196** (0.163-0.239)	**0.262** (0.217-0.319)	**0.319** (0.262-0.392)	**0.400** (0.318-0.509)	**0.467** (0.363-0.607)	**0.539** (0.408-0.718)	**0.617** (0.454-0.846)	**0.730** (0.515-1.04)	**0.823** (0.561-1.22)
15-min	**0.181** (0.150-0.219)	**0.238** (0.197-0.289)	**0.317** (0.263-0.386)	**0.385** (0.317-0.473)	**0.484** (0.384-0.616)	**0.565** (0.439-0.734)	**0.652** (0.494-0.868)	**0.746** (0.550-1.02)	**0.883** (0.623-1.26)	**0.996** (0.679-1.48)
30-min	**0.265** (0.221-0.322)	**0.349** (0.290-0.424)	**0.465** (0.386-0.567)	**0.566** (0.465-0.696)	**0.711** (0.565-0.904)	**0.830** (0.645-1.08)	**0.957** (0.726-1.28)	**1.10** (0.807-1.50)	**1.30** (0.915-1.86)	**1.46** (0.997-2.17)
60-min	**0.374** (0.311-0.454)	**0.491** (0.408-0.597)	**0.655** (0.543-0.799)	**0.797** (0.655-0.979)	**1.00** (0.795-1.27)	**1.17** (0.908-1.52)	**1.35** (1.02-1.80)	**1.54** (1.14-2.12)	**1.83** (1.29-2.61)	**2.06** (1.40-3.05)
2-hr	**0.535** (0.446-0.650)	**0.692** (0.575-0.842)	**0.908** (0.753-1.11)	**1.09** (0.897-1.34)	**1.35** (1.07-1.72)	**1.56** (1.22-2.03)	**1.79** (1.35-2.38)	**2.03** (1.49-2.78)	**2.37** (1.67-3.39)	**2.64** (1.80-3.92)
3-hr	**0.656** (0.546-0.796)	**0.842** (0.700-1.02)	**1.10** (0.908-1.34)	**1.31** (1.08-1.61)	**1.61** (1.28-2.05)	**1.86** (1.44-2.41)	**2.11** (1.60-2.81)	**2.38** (1.76-3.27)	**2.77** (1.95-3.96)	**3.08** (2.10-4.56)
6-hr	**0.916** (0.762-1.11)	**1.17** (0.970-1.42)	**1.51** (1.25-1.84)	**1.79** (1.47-2.20)	**2.19** (1.74-2.78)	**2.50** (1.94-3.25)	**2.82** (2.14-3.76)	**3.16** (2.33-4.34)	**3.64** (2.57-5.21)	**4.02** (2.74-5.96)
12-hr	**1.24** (1.03-1.50)	**1.58** (1.31-1.92)	**2.03** (1.69-2.48)	**2.41** (1.98-2.96)	**2.93** (2.32-3.72)	**3.33** (2.59-4.33)	**3.74** (2.84-4.99)	**4.17** (3.07-5.72)	**4.76** (3.36-6.81)	**5.22** (3.56-7.74)
24-hr	**1.66** (1.47-1.92)	**2.14** (1.89-2.47)	**2.77** (2.44-3.21)	**3.29** (2.88-3.83)	**3.99** (3.38-4.81)	**4.53** (3.76-5.57)	**5.08** (4.12-6.40)	**5.65** (4.46-7.32)	**6.43** (4.87-8.67)	**7.04** (5.15-9.81)
2-day	**2.03** (1.79-2.33)	**2.65** (2.34-3.06)	**3.47** (3.06-4.02)	**4.15** (3.64-4.84)	**5.09** (4.31-6.13)	**5.82** (4.83-7.15)	**6.56** (5.32-8.26)	**7.34** (5.78-9.49)	**8.40** (6.36-11.3)	**9.23** (6.75-12.9)
3-day	**2.17** (1.92-2.50)	**2.88** (2.54-3.32)	**3.82** (3.37-4.42)	**4.60** (4.03-5.37)	**5.69** (4.82-6.86)	**6.55** (5.43-8.05)	**7.43** (6.02-9.36)	**8.35** (6.59-10.8)	**9.63** (7.29-13.0)	**10.6** (7.79-14.8)
4-day	**2.34** (2.07-2.70)	**3.12** (2.76-3.60)	**4.18** (3.69-4.83)	**5.06** (4.43-5.90)	**6.28** (5.32-7.57)	**7.25** (6.02-8.91)	**8.25** (6.69-10.4)	**9.31** (7.34-12.0)	**10.8** (8.15-14.5)	**11.9** (8.74-16.6)
7-day	**2.70** (2.39-3.11)	**3.64** (3.22-4.21)	**4.92** (4.34-5.69)	**5.98** (5.23-6.97)	**7.46** (6.32-8.98)	**8.62** (7.16-10.6)	**9.83** (7.97-12.4)	**11.1** (8.75-14.4)	**12.9** (9.74-17.3)	**14.3** (10.4-19.9)
10-day	**2.92** (2.59-3.37)	**3.97** (3.51-4.58)	**5.38** (4.75-6.23)	**6.56** (5.74-7.65)	**8.21** (6.95-9.89)	**9.50** (7.88-11.7)	**10.8** (8.79-13.7)	**12.3** (9.66-15.9)	**14.2** (10.8-19.2)	**15.8** (11.5-22.0)
20-day	**3.63** (3.22-4.19)	**4.99** (4.41-5.75)	**6.81** (6.01-7.88)	**8.34** (7.30-9.73)	**10.5** (8.87-12.6)	**12.2** (10.1-15.0)	**13.9** (11.3-17.5)	**15.8** (12.4-20.4)	**18.3** (13.9-24.7)	**20.4** (14.9-28.4)
30-day	**4.32** (3.82-4.97)	**5.92** (5.24-6.84)	**8.10** (7.15-9.37)	**9.92** (8.68-11.6)	**12.5** (10.6-15.0)	**14.5** (12.0-17.8)	**16.6** (13.5-20.9)	**18.8** (14.8-24.4)	**21.9** (16.6-29.5)	**24.4** (17.8-34.0)
45-day	**5.20** (4.61-5.99)	**7.10** (6.28-8.19)	**9.66** (8.52-11.2)	**11.8** (10.3-13.8)	**14.8** (12.6-17.9)	**17.2** (14.3-21.2)	**19.7** (16.0-24.9)	**22.4** (17.6-29.0)	**26.1** (19.7-35.1)	**29.0** (21.2-40.4)
60-day	**6.15** (5.45-7.09)	**8.31** (7.35-9.59)	**11.2** (9.91-13.0)	**13.7** (12.0-16.0)	**17.1** (14.5-20.7)	**19.9** (16.5-24.5)	**22.8** (18.4-28.7)	**25.8** (20.3-33.4)	**30.0** (22.7-40.5)	**33.4** (24.4-46.5)

[1] Precipitation frequency (PF) estimates in this table are based on frequency analysis of partial duration series (PDS).

Numbers in parenthesis are PF estimates at lower and upper bounds of the 90% confidence interval. The probability that precipitation frequency estimates (for a given duration and average recurrence interval) will be greater than the upper bound (or less than the lower bound) is 5%. Estimates at upper bounds are not checked against probable maximum precipitation (PMP) estimates and may be higher than currently valid PMP values.

Please refer to NOAA Atlas 14 document for more information.

Back to Top

PF graphical

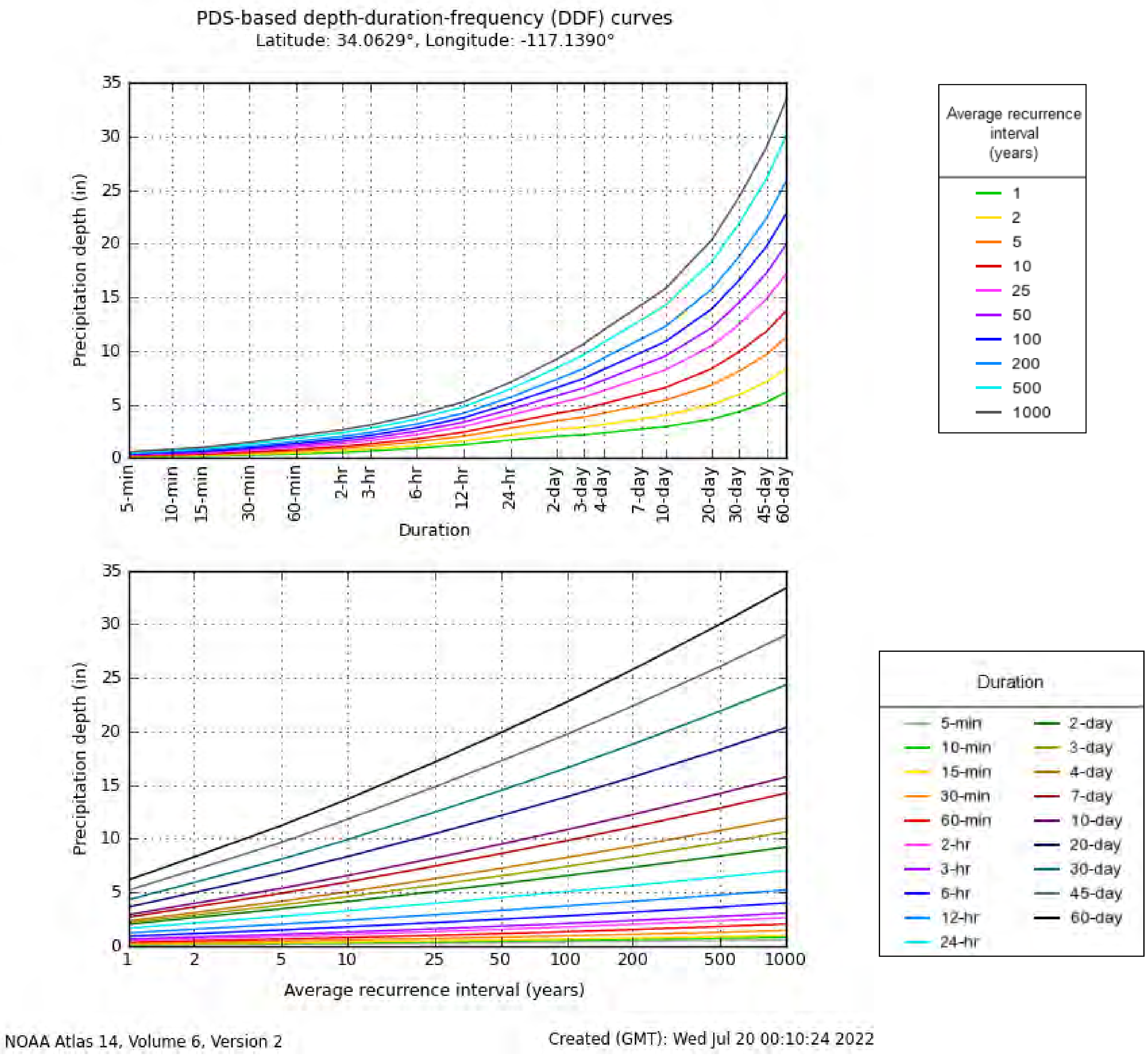

Back to Top

Maps & aerials

Small scale terrain

Large scale terrain

Large scale map

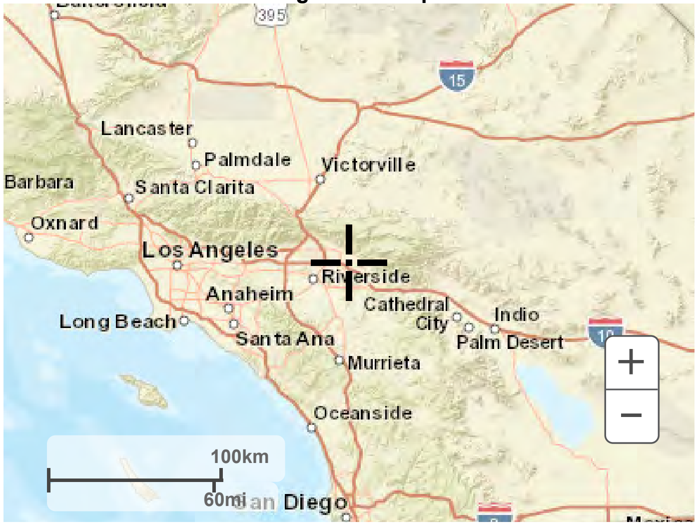

Large scale aerial

[Back to Top](#)

[US Department of Commerce](#)
[National Oceanic and Atmospheric Administration](#)
[National Weather Service](#)
[National Water Center](#)
1325 East West Highway
Silver Spring, MD 20910
Questions?: HDSC.Questions@noaa.gov

[Disclaimer](#)

APPENDIX M

TGR Geotechnical, Inc.'s Geotechnical Investigation Report, Northwest Corner of E. Colton Avenue and N. Wabash Avenue, Redlands, California 92374, APN 0168-291-02, dated April 8, 2022

TGR

Geotechnical
Environmental
Hydrogeology
Material Testing
Construction Inspection

April 8, 2022 Project No. 22-7455

Vanita Soni Puri
1423 Georgina Ave.,
Santa Monica, CA 90402

Subject: Preliminary Geotechnical Investigation Report, Northwest Corner of E. Colton Avenue and N. Wabash Avenue, Redlands, California 92374, APN 0168-291-02.

Vanita,

In accordance with your request and authorization, TGR Geotechnical, Inc. (TGR) has performed a preliminary geotechnical investigation for the proposed development at the subject site in the city of Redlands, California. The subject site is an approximately 9-acre, undeveloped parcel of land covered in grass and vegetation. It is our understanding that the proposed development will consist of 103 single family homes with associated streets, driveways, parking, and a central common open park space. This report presents the findings of our geotechnical investigation, including site seismicity, settlement potential, infiltration rates and provides geotechnical design recommendations for the proposed improvements. The work was performed in general accordance with our proposal dated March 7, 2022.

Based on our investigation the proposed development is feasible from a geotechnical viewpoint provided the recommendations presented in this report are implemented during design and construction.

If you have any questions regarding this report, please do not hesitate to contact this office. We appreciate this opportunity to be of service.

Respectfully submitted,

TGR GEOTECHNICAL, INC.

Robert Aguilar

Robert Aguilar
Staff Engineer

SANJAY GOVIL
No. GE2382
EXP. 6/30/2022

EDWARD LOUIS BURROWS
No. 1750
CERTIFIED ENGINEERING GEOLOGIST

Sanjay Govil, PhD, PE, GE 2382
Principal Geotechnical Engineer

Edward L. Burrows, MS, PG, CEG 1750
Principal Engineering Geologist

Distribution: (1) Addressee

TGR GEOTECHNICAL
DBE & 8(a) firm
3037 S. HARBOR BLVD
SANTA ANA, CA 92704
P 714.641.7189 F 714.641.7190
www.tgrgeotech.com

ATTACHMENTS

Plate 1 – Boring Location Map

Figure 1 – Site Location Map
Figure 2 – Regional Geology Map
Figure 3 – Regional Fault Map
Figure 4 – Seismic Hazard Zone Map

Table 1 – Percolation Test Worksheet

Appendix A – References
Appendix B – Log of Borings
Appendix C – Laboratory Testing Procedures and Results
Appendix D – Site Seismic Design and Deaggregated Parameters
Appendix E – Standard Grading Specifications

INTRODUCTION

Site Descriptions and Proposed Project Development

The subject site is located on the northwest corner of E. Colton Avenue and N. Wabash Avenue in the city of Redlands, California (Figure 1). The subject site is an approximately 9-acre, undeveloped parcel of land covered in grass and vegetation. It is our understanding that the proposed development will consist of 103 single family homes with associated streets, driveways, parking, and a central common open park space. No grading plans were available at the time of this report. However, it is our understanding that minor cuts and fills will be required to reach design grades.

Scope of Work

The scope of work for this preliminary geotechnical investigation included the following:

- Site reconnaissance to assess current site conditions, mark boring locations and call Dig-Alert for utility clearance.
- Sampling and logging nine (9) borings utilizing a hollow stem drill rig to approximate depths ranging from 3 to 9 feet at the subject site to evaluate subsurface soil conditions. All borings encountered refusal due to cobbles. The borings were backfilled with cuttings and surface tamped.
- Percolation testing of the near surface soils at two (2) locations from depths of 5 to 9 feet below existing grade. The testing procedures followed the County of San Bernardino guidelines.
- Laboratory testing of selected samples to include in-situ moisture and dry density, maximum density and optimum moisture content, shear, consolidation, passing No. 200 sieve, corrosion series and R-value.
- Engineering analysis including infiltration rates, site seismicity, seismic settlement, foundation design and soils engineering/earthwork with respect to the suitability of the proposed development.
- Preparation of this report summarizing current subsurface soil conditions, findings, and presenting our recommendations for the proposed development.

Field Investigation

Field exploration was performed on March 15th, 2022 by members from our firm who logged the borings and obtained representative samples, which were subsequently transported to the laboratory for further review and testing. The approximate locations of the borings are indicated on the enclosed Boring Location Map (Plate 1).

The subsurface conditions were explored by drilling, sampling, and logging nine (9) borings with a truck mounted hollow stem auger drill rig. Borings B-1 through B-9 were advanced to approximate depths ranging from 3 to 9 feet below existing grade. All borings encountered refusal in cobbles and/or boulders. Subsequent to drilling, all borings were backfilled with excavated soil and surface tamped. The log of borings presenting soil conditions and descriptions are presented in Appendix B.

The drill rig was equipped with a sampling apparatus to allow for recovery of driven modified California Ring Sampler (CRS), 3-inch outside diameter, and 2.42-inch inside diameter and SPT samples.

The samples were driven using an automatic 140-pound hammer falling freely from a height of 30 inches. The blow counts for CRS were converted to equivalent SPT blow counts. Soil descriptions were entered on the logs in general accordance with the Unified Soil Classification System (USCS). Driven samples and bulk samples of the earth materials encountered at selected intervals were recovered from the borings. The locations and depths of the soil samples recovered are indicated on the boring logs in Appendix B.

Two (2) percolation test borings, B-5/P-1 and P-2, were advanced to an approximate depth of 9 feet below existing ground surface and percolation testing was performed at depths of approximately 5 to 9 feet below existing grade. Subsequent to percolation testing the borings were backfilled with excavated soils and surface tamped.

Percolation Testing

Upon completion of drilling and sampling Borings B-5/P-1 and P-2 were converted into a field percolation test well. Field percolation testing was performed in general accordance with the with the San Bernardino Technical Guidance for WQMP for sandy soils.

The boreholes were converted to field percolation test wells by placing approximately two inches of gravel at the bottom of the borehole, installing three-inch diameter PVC pipes and backfilling the annular space with gravel. A correction factor was applied to account for the placement of gravel.

Infiltration test rates were determined utilizing the referenced County of San Bernardino guidelines. Results of the infiltration testing are summarized in Table 1 below:

Table 1 – Infiltration Rates

Test Location	Test Depth (feet)	Infiltration Rate (Inches/hour)
B-5/P-1	5-9	10.45
P-2	5-9	7.98

Suitability Assessment Safety Factor

Factor values (v), for Factor Category A, were assigned according to the San Bernardino Technical Guidance Document for WQMP, VII.4.

Table 2 (below) presents assigned factor values and the calculated Suitability Assessment Safety Factor (Σp) in Worksheet H from the San Bernardino Technical Guidance Document for WQMP Appendix VII.

Table 2 – Worksheet H

Factor Category		Factor Description	Assigned Weight (w)	Factor Value (v)	Product (p) p = w * v
A	Suitability Assessment	Soil assessment methods	0.25	2	0.50
		Predominant soil texture	0.25	1	0.25
		Site soil variability	0.25	1	0.25
		Depth to groundwater / impervious layer	0.25	1	0.25
		Suitability Assessment Safety Factor, $S_A = \Sigma p$			1.25

The above values should be used in conjunction with Factor Category B parameters (to be determined by others) as specified in Worksheet H of the San Bernardino Technical Guidance Document for WQMP Appendix VII to evaluate the combined safety factor that should be applied to the tested infiltration rates.

Laboratory Testing

Laboratory tests were performed on representative samples to verify the field classification of the recovered samples and to evaluate the geotechnical properties of the subsurface soils. The following tests were performed:

- In-situ Moisture Content (ASTM D2216) and Dry Density (ASTM D7263);
- Maximum Dry Density and Optimum Moisture Content (ASTM D1557);
- Direct Shear Strength (ASTM D3080);
- Consolidation (ASTM D2435);
- Expansion Potential (ASTM D4829);
- Passing No. 200 Sieve (ASTM 1140);
- R-value (CAL 301); and
- Corrosion series:
    1. Soluble Sulfate (CAL.417A);
    2. Soluble Chlorides (CAL.422);
    3. Minimum Resistivity (CAL.643); and
    4. pH (CAL 747)

Laboratory tests for geotechnical characteristics were performed in general accordance with the ASTM procedures. The results of the in-situ moisture content and density tests are shown on the borings logs. The results of other laboratory tests are presented in Appendix C.

GEOTECHNICAL FINDINGS

Geology

Regional Geologic Setting

The project site is located in the east central portion of the Redlands 7.5-minute quadrangle, San Bernardino County, California. Per the Geologic Map of the Harrison Mountain/north ½ of Redlands quadrangle, California (Dibblee, 2004), the subject site is underlain by Quaternary alluvium, consisting of gravel and sand of stream channels. Figure 2 presents the Regional Geology Map.

Earth Units

Based on our subsurface investigation, the subject area is generally underlain by approximately 5 feet of light brown silty sand, with some gravel in a dry condition. The silty sand is underlain by sand, gravel and cobbles to an approximate depth of 9 feet below existing grade, the maximum depth explored. Detailed descriptions of the earth units encountered in our borings are presented in the log of the borings. (Appendix B)

Groundwater

Subsurface water was not encountered to a depth of approximately 9 feet below existing grade during the subsurface exploration.

USGS groundwater data from wells nearest to the subject site indicate a historic high groundwater of between 49 feet below existing grade and 1601 feet above NGVD 1929 (USGS 340346117080001 001S002W30C001S).

Seasonal and long-term fluctuations in the groundwater may occur as a result of variations in subsurface conditions, rainfall, run-off conditions and other factors. Therefore, variations from our observations may occur. Static groundwater is not anticipated to impact the proposed development.

Static groundwater is not anticipated to impact the proposed development.

Expansive Soil

Onsite soils have a tested expansion index of 0, correlating to a “very low” expansion potential. The recommendations provided in this report account for the expansion potential of the onsite soils.

Hydro Collapse

Laboratory testing indicates near surface soils undergo approximately 1% to 2% hydro collapse when inundated under load, correlating to a “low” potential for hydro collapse. The recommendations in this report account for the hydro collapse potential of near surface soils.

Cement Type and Corrosion

Based on laboratory testing concrete used should be designed in accordance with the provisions of ACI 318-14, Chapter 19 for Exposure Class S0: Cement with a minimum unconfined compressive strength of 2,500 psi, and for Exposure Class C1 (Moderate) – Concrete exposed to moisture but not a significant source of chlorides, per ACI 318-14 Table 19.3.1.1.

Corrosion tests indicate a mild corrosion potential for ferrous metals exposed to site soils.

TGR does not practice corrosion engineering. If needed, a qualified specialist should review the site conditions and evaluate the corrosion potential of the site soil to the proposed improvements and to provide the appropriate corrosion mitigations for the project.

Seismic Review

Faulting and Seismicity

The subject site, like the rest of Southern California, is located within a seismically active region as a result of being located near the active margin between the North American and Pacific tectonic plates. The principal source of seismic activity is movement along the northwest-trending regional faults such as the San Andreas, San Jacinto and Elsinore fault zones. These fault systems produce approximately 5 to 35 millimeters per year of slip between the plates.

We consider the most significant geologic hazard to be the potential for moderate to strong seismic shaking that is likely to occur at the subject site. The subject site is located in the highly seismic Southern California region within the influence of several faults that are considered to be Holocene-active or pre-Holocene faults. A Holocene-active fault is defined by the State of California as a fault that has exhibited surface displacement within the Holocene time (about the last 11,700 years). A pre-Holocene fault is defined by the State as a fault whose history of past movement is older than 11,700 years ago and does not meet the criteria for a Holocene-active fault.

These Holocene-active and pre-Holocene faults are capable of producing potentially damaging seismic shaking at the site. It is anticipated that the subject site will periodically experience ground acceleration as the result of small to moderate magnitude earthquakes. Other active faults without surface expression (blind faults) or other potentially active seismic sources that are not currently zoned and may be capable of generating an earthquake are known to be present under in the region.

The subject site is not included within any Earthquake Fault Zones as created by the Alquist-Priolo Earthquake Fault Zoning Act (Hart, 1997). Our review of geologic literature pertaining to the site area indicates that there are no known active or potentially active faults located within or immediately adjacent to the subject property.

The nearest fault to the subject site is the Redlands fault mapped approximately 0.7 miles southeast of the site. Other nearby faults include the Reservoir Canyon fault mapped approximately 1.6 miles to the southeast of the site, the Crafton Hills fault mapped approximately 2.9 miles southeast of the site, the Western Heights fault mapped approximately 3.1 miles southeast of the site, the South Branch San Andreas fault mapped approximately 3.1 miles northeast of the site, the Chicken Hill fault mapped approximately 4.3 miles southeast of the site, the Live Oak Canyon fault mapped approximately 4.4 miles southwest of the site, the Mill Creek fault mapped approximately 5.1 miles northeast of the site and the Loma Linda fault mapped approximately 5.6 miles to the southwest of the site. The Regional Fault Map, Figure 3, shows the location of the subject site in respect to the regional faults.

Secondary Seismic Hazards

Surface Fault Rupture and Ground Shaking

Since no known faults are located within the site, surface fault rupture is not anticipated. However, due to the close proximity of known active and potentially active faults, severe ground shaking should be expected during the life of the proposed structures.

Liquefaction

Liquefaction is a seismic phenomenon in which loose, saturated, fine-grained granular soils behave similarly to a fluid when subjected to high-intensity ground shaking. Liquefaction occurs when these ground conditions exist: 1) Shallow groundwater; 2) Low density, fine, clean sandy soils; and 3) High-intensity ground motion. Effects of liquefaction can include sand boils, settlement, and bearing capacity failures below foundations.

A review of the San Bernardino County General Plan: Geologic Hazard Overlays, Map FH31C indicates that the subject site is not located within an area mapped as having a potential for earthquake induced liquefaction (Figure 4).

Based on the above and depth to groundwater, potential for liquefaction is considered to be negligible.

Seismically Induced Settlement

Ground accelerations generated from a seismic event can produce settlements in sands or in granular earth materials both above and below the groundwater table. This phenomenon is often referred to as seismic settlement and is most common in relatively clean sands, although it can also occur in other soil materials. Based on the nature and density of site soils encountered, seismic settlement is anticipated to be negligible.

Landsliding

Landsliding involves downhill motion of earth materials during or subsequent to earth shaking. Historically, landslides triggered by earthquakes have been a significant cause of damage. Areas that are most susceptible to earthquake induced landslides are areas with steep slopes in poorly cemented or highly fractured bedrock, areas underlain by loose, weak soils, and areas on or adjacent to existing landslide deposits.

A review of the San Bernardino County General Plan: Geologic Hazard Overlays, Map FH31C, this property is not located within a mapped zone of landsliding and adjacent areas are situated on relatively flat topography. Based on the above, the general landslide susceptibility is considered to be negligible.

Lateral Spreading

Seismically induced lateral spreading involves primarily movement of earth materials due to earth shaking. Lateral spreading is demonstrated by near-vertical cracks with predominantly horizontal movement of the soil mass involved. The topography in the vicinity of the subject site is relatively flat. Based on the above and absence of liquefaction, the potential for lateral spreading at the subject site is considered very low.

DISCUSSIONS AND CONCLUSIONS

General

Based on our field exploration, laboratory testing and engineering analysis, it is our opinion that the proposed structure and proposed grading will be safe against hazard from landslide, settlement, or slippage and the proposed construction will have no adverse effect on the geologic stability of the adjacent properties provided our recommendations presented in this report are followed.

Conclusions

Based on our findings and analyses, the subject site is likely to be subjected to moderate to severe ground shaking due to the proximity of known active and potentially active faults. This may reasonably be expected during the life of the structure and should be designed accordingly.

The primary conditions affecting the proposed project site development are as follows:

- Potential for caving during excavation.
- The site is underlain by alluvium composed of gravels, cobbles, and boulders in a sandy matrix. As such, oversized materials are anticipated to be encountered during grading operations.

The engineering evaluation performed concerning site preparation and the recommendations presented are based on information provided to us and obtained by us during our office and fieldwork. This report is prepared for the development of 103 single family homes with associated streets, driveways, parking, and a central common open park space. In the event that any significant changes are made to the proposed development, the conclusions and recommendations contained in this report shall not be considered valid unless the changes are reviewed, and the recommendations of this report are verified or modified in writing by TGR.

RECOMMENDATIONS

Seismic Design Parameters

When reviewing the 2019 California Building Code the following data should be incorporated into the design.

Parameter	**Value**
Latitude (degree)	34.0638
Longitude (degree)	-117.1400
Site Class	D – Stiff Soil
Site Coefficient, F_a	1.0
Site Coefficient, F_v	N/A
Mapped Spectral Acceleration at 0.2-sec Period, S_s	1.914 g
Mapped Spectral Acceleration at 1.0-sec Period, S_1	0.789 g
Spectral Acceleration at 0.2-sec Period Adjusted for Site Class, S_{MS}	2.914 g
Spectral Acceleration at 1.0-sec Period Adjusted for Site Class, S_{M1}	N/A
Design Spectral Acceleration at 0.2-sec Period, S_{DS}	1.276 g
Design Spectral Acceleration at 1.0-sec Period, S_{D1}	N/A

Site Specific Response Spectra

The USGS Unified Hazard tool, the USGS RTGM Calculator and the USGS App for Deterministic Spectra Acceleration were utilized to develop site specific ground motion spectra. The analysis was performed utilizing the following attenuation relationships that are part of NGA as required by 2019 CBC code requirements.

- Campbell & Bozorgnia (2014)
- Boore, Stewart, Seyhan & Atkinson (2014)
- Chiou & Youngs (2014)
- Abrahamson, Silva & Kamal (2014)

The results of the Site Specific Response Spectra are incorporated in Table 1 and on Figure 1 in Appendix D. The results include deterministic spectra at 5% damping, maximum rotated component at 0.84 fractile and the probabilistic spectra, maximum rotated component at 5% damping for a return period of 2475 year and subsequently multiplied by risk coefficient to obtain the MCER probabilistic spectral acceleration. The Vs30 utilized was 260 m/s.

The probabilistic response spectrum was determined using the OSHPD generated seismic values and raw output generated from the U.S. Geological Survey Unified Hazard Tool. The spectral response acceleration data generated from the U.S. Geological Survey Unified Hazard Tool was entered into the U.S. Geological Survey Risk-Targeted Ground Motion Calculator tool for each time period. The data is presented on Table 2 in Appendix D.

The deterministic response spectrum was determined using the greatest Deaggregation Contributor from the U.S. Geological Survey Unified Hazard Tool. The largest contributing fault parameters were entered into the Pacific Earthquake Engineering Research Center NGAW2 tool with a user defined sigma + 5% damping. For the deterministic analysis for the subject site, the fault utilized was the San Andreas (San Bernardino S) fault, with a characteristic magnitude M of 7.47 and a fault distance R of 5.81 km. The data is presented on Table 3 in Appendix D.

The above generated spectral accelerations were compared against the minimum code requirements in ASCE7-16 (Chapters 11 and 21) resulting in the final design response spectra which is presented in Table 1 and on Figure 1 in Appendix D.

Based on Table 1 and Figure 1, the recommended Site Specific S_{DS} and S_{D1} are as follows:

$S_{DS} = 1.211$
$S_{D1} = 1.409$

Mapped values may be used in lieu of site-specific values to design structures on Site Class D sites with an S1 greater than or equal to 0.2, provided the value of the seismic response coefficient Cs is determined by Eq. (12.8-2) for values of $T \leq 1.5T_s$ and taken as equal to 1.5 times the value computed in accordance with either Eq. (12.8-3) for $T_L \geq T > 1.5T_s$ or Eq. (12.8-4) for $T > T_L$.

The structural consultant should review the above parameters and the 2019 California Building Code to evaluate the seismic design.

Conformance to the criteria presented in the above table for seismic design does not constitute any type of guarantee or assurance that significant structural damage or ground failure will not occur during a large earthquake event. The intent of the code is “life safety” and not to completely prevent damage of the structure, since such design may be economically prohibitive.

Foundation Design Recommendations

The proposed residential structures may be supported on continuous and/or spread footings. Bearing capacity recommendations for shallow foundations are presented below. These recommendations assume that the footings will be supported on a minimum of two (2) feet of engineered fill.

For foundations supported on two (2) feet of engineered fill with minimum ninety (90) percent relative compaction at near optimum moisture content, an allowable bearing pressure of 2,500 pounds per square foot may be used in design.

The allowable bearing pressure for shallow foundations supported on minimum ninety (90) percent compacted fill shall be equal to 2,000 pounds per square foot. The recommended minimum footing depth is twelve (12) inches for single story structures and eighteen (18) inches for 2-story structures.

The minimum recommended continuous footing width is fifteen (15) inches for single story structures, eighteen (18) inches for 2-story structures and twenty-four (24) inches for pad footings. A minimum reinforcement of two (2) No. 4 steel bar top and two (2) No. 4 steel bar bottom is required for continuous footings from a geotechnical viewpoint. Foundation design details such as concrete strength, reinforcements, etc should be established by the Structural Engineer.

A one-third (1/3) increase on the aforementioned bearing pressure may be used in design for short-term wind or seismic loads.

The total and differential static settlement is anticipated to be 1 inch and 0.5 inches over 30 feet or less.

Resistance to lateral loads including wind and seismic forces may be provided by frictional resistance between the bottom of concrete and the underlying fill soils and by passive pressure against the sides of the foundations. A coefficient of friction of 0.43 may be used between concrete foundation and underlying soil. The recommended passive pressure of the engineered fill may be taken as an equivalent fluid pressure of 300 pounds per cubic foot (3,000 psf max).

Footings located near property lines where the lateral removal cannot be achieved shall be designed for a reduced bearing capacity of 1,500 pounds per square foot and the passive resistance shall be ignored.

Slab-On-Grade

Slab-on-grade should be a minimum of five (5) inches thick and reinforced with a minimum of No. 4 reinforcing bar on 18-inch centers in two horizontally perpendicular directions. Reinforcing should be properly supported to ensure placement near the vertical midpoint of the slab. "Hooking" of the reinforcement is not considered an acceptable method of positioning the steel. The slab should not be structurally connected to the buildings.

Subgrade material for the slab-on-grade should be compacted to a minimum of ninety (90) percent of the maximum laboratory dry density to a minimum depth of two (2) feet. Prior to placement of concrete, the subgrade soils should be moistened to near optimum moisture content and verified by our field representative.

The actual thickness and reinforcement of the slab shall be designed by the structural engineer per the 2019 California Building Code.

For moisture sensitive flooring, the floor slab should be underlain by an impermeable polyethylene membrane (Stego Wrap, Moistop Plus, or any equivalent meeting the requirements of ASTM D1745) as a capillary break. The membrane shall be a minimum 10-mil thick and overlain and underlain by a minimum of 2-inch thick layer of moistened (not saturated) sand to both protect the membrane and provide proper concrete curing. The polyethylene membrane joints should be lapped not less than 6 inches.

Flatwork

Flatwork should be a minimum of four (4) inches thick should be reinforced with a minimum of No. 3 reinforcing bar on 24-inch centers in two horizontally perpendicular directions. Reinforcing should be properly supported to ensure placement near the vertical midpoint of the slab. "Hooking" of the reinforcement is not considered an acceptable method of positioning the steel. The subgrade material should be compacted to a minimum of ninety (90) percent of the maximum laboratory dry density (ASTM D1557) to a minimum depth of one (1) foot. Prior to placement of concrete, the subgrade soils should be moistened to near percent of optimum moisture content and verified by our field representative. The actual thickness and reinforcement of the slab shall be designed by the structural engineer and should include the anticipated loading condition.

Retaining Wall Recommendations

The following soil parameters may be used for the design of the retaining wall with level backfill and a maximum height of six (6) feet:

Conditions	Parameters
Active (Level)	35 psf/ft
Passive	300 (maximum 3,000 psf)
Friction Coefficient	0.43

- Unrestrained retaining wall, such as a cantilever wall, the active earth pressure shall be used.
- Any import backfill shall be granular non-expansive select fill with a minimum sand equivalent of 30 The import fill should be tested and approved by TGR prior to backfill.
- An allowable coefficient of friction between properly compacted on-site fill soil and concrete of 0.43 may be used with the dead-load forces.
- Passive pressure and frictional resistance could be combined in determining the total lateral resistance. However, one of them shall be reduced by 50 percent.
- The passive pressure in the upper 6 inches of soil not confined by slabs or pavement should be neglected.

Retaining structures should be provided with a drainage system to prevent buildup of hydrostatic pressure behind the walls. Provisions should be made to collect and dispose of excess water away from the wall. Wall drainage may be provided by a perforated pipe encased in gravel or crushed rock and enclosed by geo-synthetic filter fabric. We do not recommend omitting the drains behind walls.

In addition to the above lateral forces due to retained earth, surcharge due to improvements, such as an adjacent structure, should be considered in the design of the retaining wall. A minimum vertical surcharge load of 300 psf should be used in design of walls due to adjacent traffic unless the traffic is kept at least 6 feet from the walls. Loads applied within a 1:1 projection from any surcharging structure on the stem of the wall shall be considered as lateral surcharge.

For uniform lateral surcharge conditions applied to free-to-deflect walls and restrained walls, we recommend utilizing a minimum horizontal load equal to 33 percent and 50 percent of the vertical load, respectively, and should be applied uniformly over the entire height of the wall. This horizontal load should be applied below the 1:1 projection plane. To minimize the surcharge load from an adjacent footing, deepened footings may be considered.

Retaining wall footings should have a minimum embedment of twenty-four (24) inches below the lowest adjacent grade. The retaining walls footings shall be supported on a minimum two (2) feet of compacted engineered fill compacted to a minimum ninety (90) percent relative compaction as per ASTM D1557.

Shrinkage/Subsidence

Removal and recompaction of the near surface soils is estimated to result in shrinkage ranging from 5 to 10 percent. Based on our previous experience with similar projects, additional volume loss can be anticipated due to the presence of oversized materials in the near surface soils. Minor ground subsidence is expected to occur in the soils below the zone of removal, due to settlement and machinery working. The subsidence is estimated to be between one and two tenths of a foot.

Site Development Recommendations

General

During earthwork construction, all site preparation and the general procedures of the contractor should be observed, and the fill selectively tested by a representative of TGR. If unusual or unexpected conditions are exposed in the field, they should be reviewed by this office and if warranted, modified and/or additional recommendations will be offered. During demolition of the existing buildings, large concrete slab and associated site work, voids created from removal of buried elements (footings, pipelines, septic pits, etc.) shall be backfilled with engineered fill to a minimum ninety (90) percent relative compaction per ASTM D1557 under the observation of TGR.

Grading

All grading should conform to the guidelines presented in the California Building Code (2019 edition), except where specifically superseded in the text of this report. Prior to grading, TGR’s representative should be present at the pre-construction meeting to provide grading guidelines, if needed, and review any earthwork. Oversize particles may be encountered during grading. All particles greater than 4-inches shall be removed and disposed offsite.

Oversized materials may be crushed to 1” minus and mixed with onsite soil in a controlled manner as recommended by the geotechnical consultant and used as engineered fill.

The footings and slab-on-grade shall be supported on a minimum two (2) feet of engineered fill. A minimum one (1) foot of engineered fill is recommended under flatwork and pavement. Site soils may be reused as engineered fill provided, they are free of oversized particles and the recommendations presented in this report are implemented. Exposed bottoms should be scarified a minimum of 6-inches, moisture conditioned to near optimum moisture and compacted to a minimum ninety (90) percent relative compaction. Subsequently, site fill soils should be re-compacted to a minimum of ninety (90) percent relative compaction at near optimum moisture content. The lateral extent of removals beyond the building/structure/footing limits should be equal to at least 5 feet.

The depth of over-excavation should be reviewed by the Geotechnical Consultant during the actual construction. Any subsurface obstruction buried structural elements, and unsuitable material encountered during grading, should be immediately brought to the attention of the Geotechnical Consultant for proper exposure, removal and processing, as recommended.

Fill Placement

Prior to any fill placement TGR should observe the exposed surface soils. The site soils may be re-used as engineered fill provided, they are free of organic content and particle size greater than 4-inches. All particles greater than 4-inches shall be removed and disposed offsite. Fill shall be moisture conditioned to near optimum moisture and compacted to a minimum relative compaction of ninety (90) percent in accordance with ASTM D1557. Any import soils shall be non-expansive and approved by TGR Geotechnical Inc.

Compaction

Prior to fill placement, the exposed surface should be scarified to a minimum depth of six (6) inches, fill placed in eight (8) inch loose lifts moisture conditioned to near optimum moisture and compacted to a minimum relative compaction of ninety (90) percent in accordance with ASTM D1557.

Trenching

All excavations should conform to CAL-OSHA and local safety codes.

Temporary Excavation and Shoring

Due the dry, granular nature of onsite soils, all cuts shall be properly shored or sloped back to at least 1.H:1V (Horizontal: Vertical) or flatter. Some sloughing may be anticipated due to the granular nature of site soils. The exposed slope face should be kept moist (but not saturated) during construction to reduce local sloughing. No surcharge loads should be permitted within a horizontal distance equal to the height of cut from the toe of excavation unless the cut is properly shored. Excavations that extend below an imaginary plane inclined at 45 degrees below the edge of any nearby adjacent existing site facilities should be properly shored to maintain foundation support at the adjacent structures.

Utility Trench Backfill

All utility trench backfills in structural areas and beneath hardscape features should be brought to near optimum moisture content and compacted to a minimum relative compaction of ninety (90) percent of the laboratory standard. Flooding/jetting is not recommended.

Sand backfill, (unless trench excavation material), should not be allowed in parallel exterior trenches adjacent to and within an area extending below a 1:1 plane projected from the outside bottom edge of the footing. All trench excavations should minimally conform to CAL-OSHA and local safety codes. Soils generated from utility trench excavations may be used provided it is moisture conditioned and compacted to ninety (90) percent minimum relative compaction.

Drainage

Positive site drainage should be maintained at all times. Drainage should not flow uncontrolled down any descending slope or retaining wall. Water should be directed away from foundations and not allowed to pond and/or seep into the ground. Pad drainage should be directed toward the street/parking or other approved area. Roof gutters and down spouts should be utilized to control roof drainage. Down spouts should outlet a minimum of 5 feet from the proposed structure or into an approved subsurface drainage system. We would recommend that any proposed open-bottom planters adjacent to proposed structures be eliminated for a minimum distance of 10 feet. As an alternative, closed-bottom type planters could be utilized. An outlet placed in the bottom of the planter could be installed to direct drainage away from structures or any exterior concrete flatwork.

Preliminary Pavement Design

The Caltrans method of design was utilized to develop the following asphalt pavement section. The section was developed based on a tested “R-Value” for compacted site subgrade soils of 73.

Traffic indices of 4.5, 5 and 6 were assumed for use in the evaluation of the asphalt pavement sections. The traffic indices are subject to approval by controlling authorities and shall be approved by the project civil engineer.

ASPHALT PAVEMENT SECTION			
Traffic Index	Asphalt (Inch)	Aggregate Base (Inch)	Total (Inch)
4.5	3.0	4.0	7.0
5.0	3.0	6.0	9.0
6.0	4.0	6.0	10.0

Aggregate base material for Asphalt Pavement should consist of CAB/CMB complying with the specifications in Section 200-2.2/200-2.4 of the current “Standard Specifications for Public Works Construction” and should be compacted to at least ninety-five (95) percent of the maximum dry density (ASTM D1557). The surface of the base should exhibit a firm and unyielding condition just prior to the placement of asphalt concrete paving. The asphalt concrete shall be compacted to a minimum of ninety-five (95) percent relative compaction.

The pavement subgrade should be constructed in accordance with the recommendations presented in the grading section of this report.

The R-value and the associated pavement section should be confirmed at the completion of site grading.

Geotechnical Review of Plans

All grading and foundation plans should be reviewed and accepted by the geotechnical consultant prior to construction. If significant time elapses since preparation of this report, the geotechnical consultant should verify the current site conditions, and provide any additional recommendations (if necessary) prior to construction.

Geotechnical Observation/Testing During Construction

Per sections 1705.6 and table 1705.6 of the 2019 California Building Code, periodic special inspection shall be performed to:

- Verify materials below shallow foundations are adequate to achieve the design bearing capacity;
- Verify excavations are extended to the proper depth and have reached proper material;
- Verify classification and test compacted materials; and
- Prior to placement of compacted fill, inspect subgrade and verify that the site has been prepared properly.

Per sections 1705.6 and table 1705.6 of the 2019 California Building Code, continuous special inspection shall be performed to:

- Verify use of proper materials, densities and lift thickness during placement and compaction of compacted fill.

The geotechnical consultant should also perform observation and/or testing at the following stages:

- During any grading and fill placement;
- After foundation excavation and prior to placing concrete;
- Prior to placing slab and flatwork concrete;
- During placement of aggregate base and asphalt or Portland cement concrete; and
- When any unusual soil conditions are encountered during any construction operation subsequent to issuance of this report.

Limitations

This report was prepared for a specific client and a specific project, based on the client's needs, directions and requirements at the time.

This report was necessarily based upon data obtained from a limited number of observances, site visits, soil and/or other samples, tests, analyses, histories of occurrences, spaced subsurface exploration and limited information on historical events and observations. Such information is necessarily incomplete. Variations can be experienced within small distances and under various climatic conditions. Changes in subsurface conditions can and do occur over time.

This report is not authorized for use by and is not to be relied upon by any party except the client with whom TGR contracted for the work. Use or reliance on this report by any other party is that party's sole risk. Unauthorized use of or reliance on this report constitutes an agreement to defend and indemnify TGR from and against any liability which may arise as a result of such use or reliance, regardless of any fault, negligence, or strict liability of TGR.

B-9 ⊕ APPROXIMATE LOCATION OF EXPLORATORY BORING

P-2 ○ APPROXIMATE LOCATION OF PERCOLATION BORING

TGR Geotechnical Environmental Hydrogeology Material Testing Construction Inspection

BORING LOCATION MAP
NW CORNER OF E. COLTON AVENUE AND N. WABASH AVENUE
REDLANDS, CALIFORNIA

PROJECT NO. 22-7455

PLATE 1

TGR
Geotechnical
Environmental
Hydrogeology
Material Testing
Construction Inspection

SITE LOCATION MAP
NW CORNER OF E. COLTON AVENUE AND N. WABASH AVENUE
REDLANDS, CALIFORNIA

PROJECT NO. 22-7455

FIGURE 1

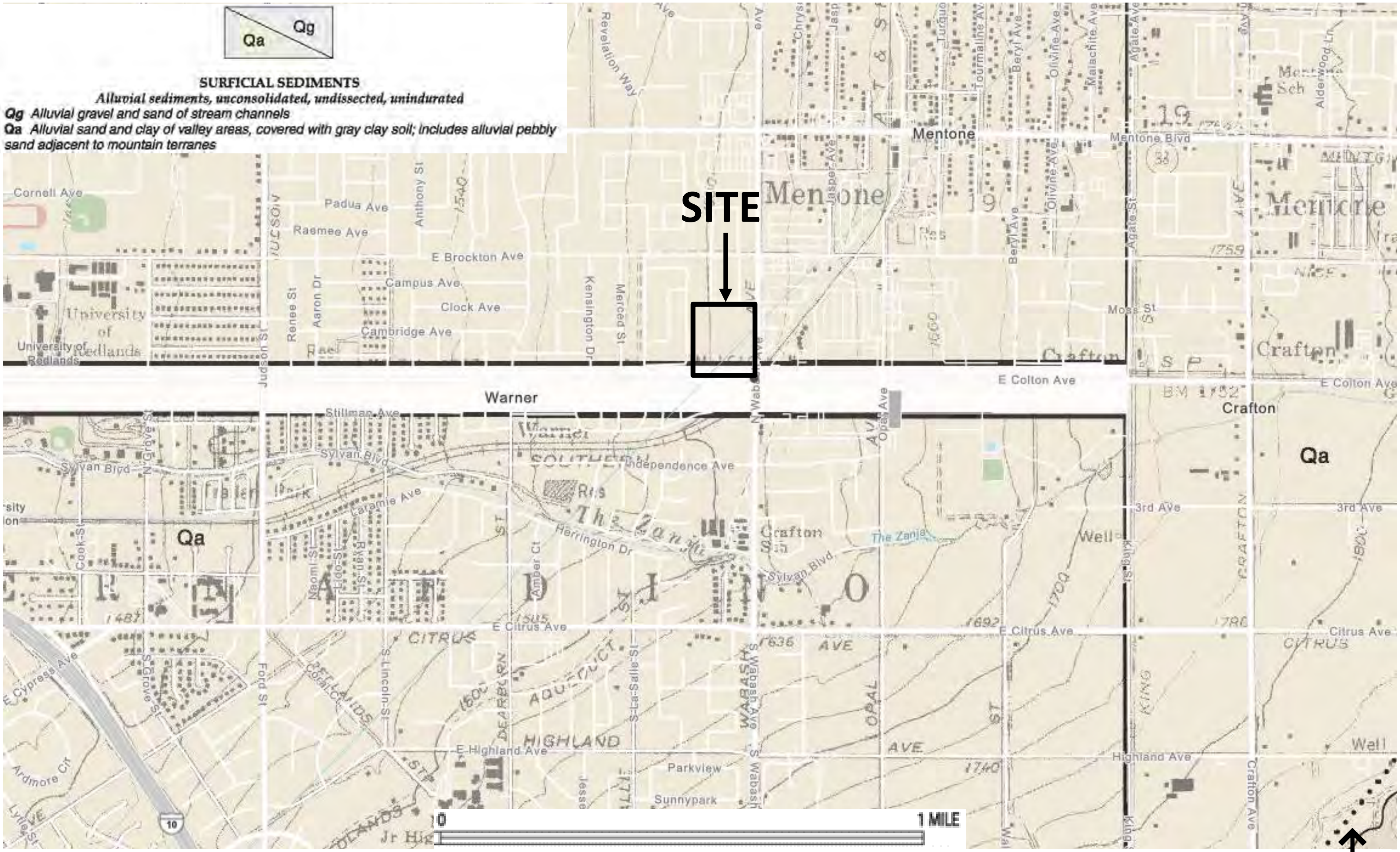

Modified From: Dibblee, T.W., and Minch, J.A., 2004, Geologic map of the Harrison Mountain/north 1/2 of Redlands quadrangles, San Bernardino and Riverside County, California: Dibblee Geological Foundation, DF-126, scale 1:24,000.

N

TGR

Geotechnical
Environmental
Hydrogeology
Material Testing
Construction Inspection

REGIONAL GEOLOGY MAP
NW CORNER OF E. COLTON AVENUE AND N. WABASH AVENUE
REDLANDS, CALIFORNIA

PROJECT NO. 22-7455

FIGURE 2

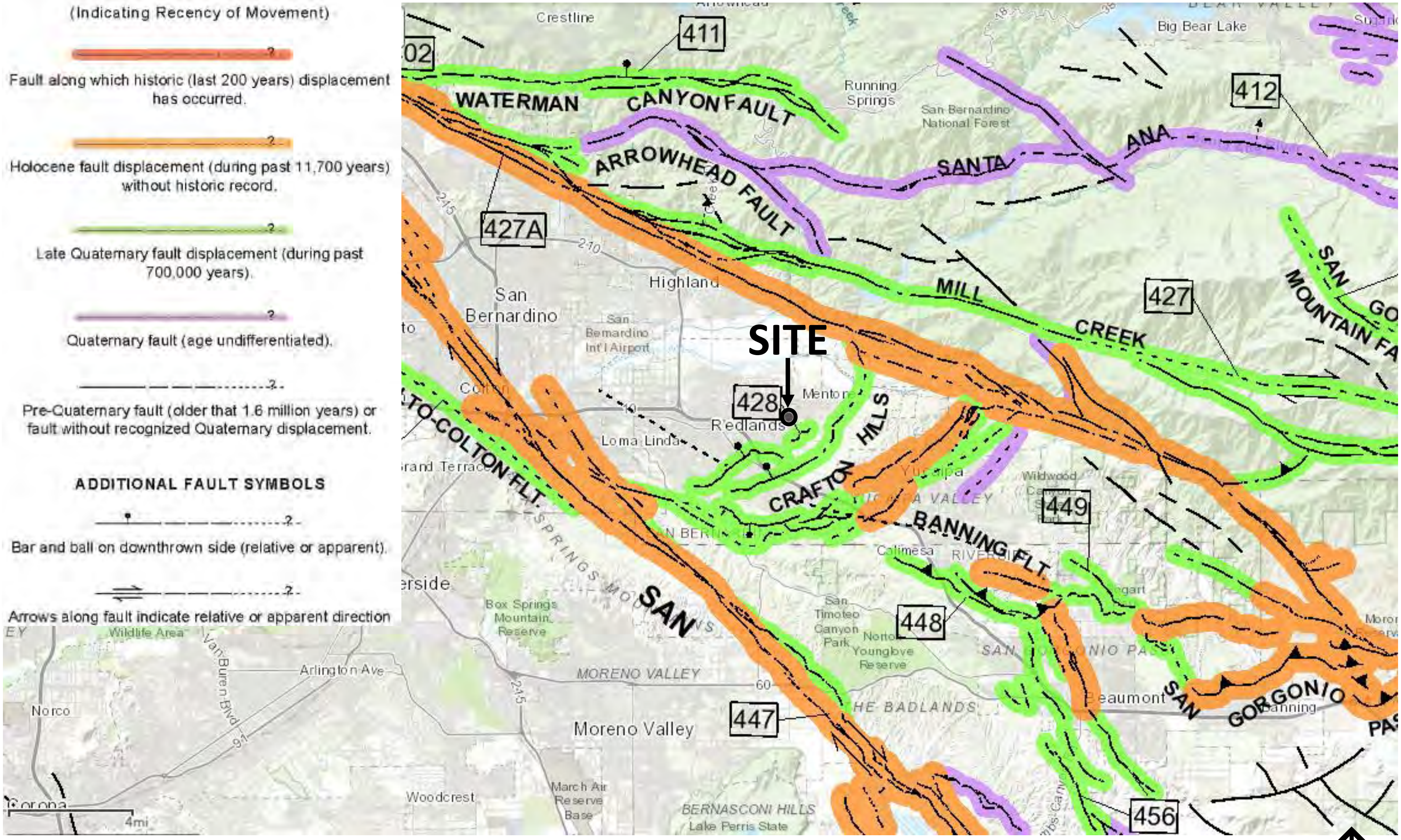

Modified From: Jennings, C. W., 2010, Fault Activity Map of California and Adjacent Areas, California Division of Mines and Geology, Geologic Data Map Series, No. 6, Scale 1:750,000.

TGR
Geotechnical
Environmental
Hydrogeology
Material Testing
Construction Inspection

REGIONAL FAULT MAP
NW CORNER OF E. COLTON AVENUE AND N. WABASH AVENUE
REDLANDS, CALIFORNIA

PROJECT NO. 22-7455

FIGURE 3

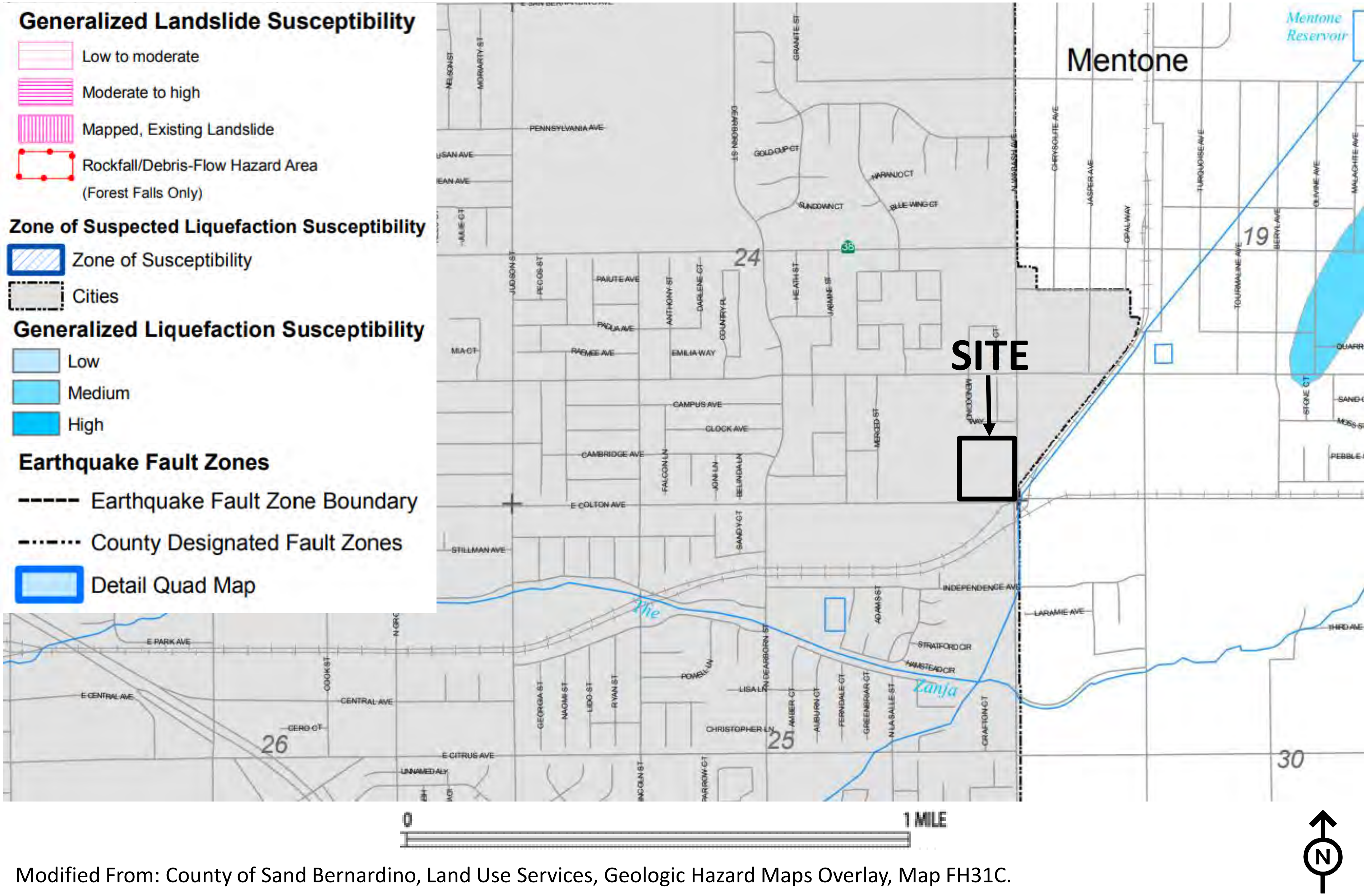

Modified From: County of Sand Bernardino, Land Use Services, Geologic Hazard Maps Overlay, Map FH31C.

Geotechnical
Environmental
Hydrogeology
Material Testing
Construction Inspection

GEOLOGIC HAZARDS MAP
NW CORNER OF E. COLTON AVENUE AND N. WABASH AVENUE
REDLANDS, CALIFORNIA

PROJECT NO. 22-7455

FIGURE 4

Table 1: Percolation Test Worksheet

Table 1

Test Hole	Total Depth (in)	Initial Depth (in)	Final Depth (in)	ΔWater Level (in)	Initial Time (min)	Final Time (min)	Δ Time (min)	Initial Height of Water (in)	Final Height of Water (in)	Average Height of Water (in)	Gravel Factor	Infiltration Rate (in/hr)
P-1/B-5	108	70.20	96.96	26.76	0.0	5.0	5.0	37.80	11.04	24.42	0.54	13.13
	108	62.76	89.88	27.12	0.0	5.0	5.0	45.24	18.12	31.68	0.54	10.44
	108	63.60	91.44	27.84	0.0	5.0	5.0	44.40	16.56	30.48	0.54	11.11
	108	62.64	89.76	27.12	0.0	5.0	5.0	45.36	18.24	31.80	0.54	10.40
	108	64.08	91.32	27.24	0.0	5.0	5.0	43.92	16.68	30.30	0.54	10.93
	108	63.00	90.00	27.00	0.0	5.0	5.0	45.00	18.00	31.50	0.54	10.45
P-2	108	64.44	92.52	28.08	0.0	5.0	5.0	43.56	15.48	29.52	0.54	11.55
	108	64.56	89.88	25.32	0.0	5.0	5.0	43.44	18.12	30.78	0.54	10.01
	108	63.84	85.20	21.36	0.0	5.0	5.0	44.16	22.80	33.48	0.54	7.80
	108	62.76	84.36	21.6	0.0	5.0	5.0	45.24	23.64	34.44	0.54	7.68
	108	64.20	84.96	20.76	0.0	5.0	5.0	43.80	23.04	33.42	0.54	7.60
	108	63.60	85.44	21.84	0.0	5.0	5.0	44.40	22.56	33.48	0.54	7.98

$$I_t = \frac{\Delta H(60r)}{\Delta t(r + 2H_{avg})}$$

ΔH = Change in height

Δt = Time interval

r = Radius

I_t Infiltration Rate

H_{ave} Average Head Height over the time interval

APPENDIX A
REFERENCES

APPENDIX A

References

California Department of Conservation – California Geological Survey, 2018, Earthquake Fault Zones, A Guide for Government Agencies, Property Owners/Developers and Geoscience Practitioners for Assessing Fault Rupture Hazards in California, Special Publication 42

California Department of Conservation – Division of Mines and Geology, 2008, Guidelines for Evaluating and Mitigating Seismic Hazards in California, CDMG Special Publication 117A.

California Department of Conservation – Division of Mines and Geology, 1998, Maps of Known Active Fault Near – Source Zones in California and Adjacent Portions of Nevada.

County of San Bernardino, 2013, Technical Guidance Document for Water Quality Management Plans, The County of San Bernardino Areawide Stormwater Program, Effective Date: September 19, 2013.

County of San Bernardino, 2011, Technical Guidance Document Appendices, Appendix VII, Infiltration Rate Evaluation Protocol and Factor of Safety Recommendation, dated May 19, 2011.

County of San Bernardino, 2010, San Bernardino County Land Use Plan, General Plan, Geologic Hazard Overlays, San Bernardino County, California, FH31 Redlands.

Dibblee, T.W., and Minch, J.A., 2004, Geologic map of the Harrison Mountain/north 1/2 of Redlands quadrangles, San Bernardino and Riverside County, California: Dibblee Geological Foundation, DF-126, scale 1:24,000.

International Code Council (ICC), California Building Code, 2019 Edition.

Jennings, C. W., 2010, Fault Activity Map of California and Adjacent Areas, California Division of Mines and Geology, Geologic Data Map Series, No. 6, Scale 1:750,000.

APPENDIX B
LOG OF BORINGS

THE FOLLOWING DESCRIBES THE TERMS AND SYMBOLS USED ON THE LOG OF BORINGS TO SUMMARIZE THE RESULTS OBTAINED IN THE FIELD INVESTIGATION AND SUBSEQUENT LABORATORY TESTING

DENSITY AND CONSISTENCY

The consistency of fine grained soils and the density of coarse grained soils are described on the basis of the Standard Penetration Test as follows:

COARSE GRAINED SOILS		ESTIMATED UNCONFINED COMPRESSIVE STRENGTH (Tsf)	FINE GRAINED SOILS	
Very Loose	< 4	< 0.25	Very Soft	< 2
Loose	4 – 10	0.35 – 0.50	Soft	2 – 4
Medium	10 – 30	0.50 – 1.0	Firm (Medium)	4 – 8
Dense	30 – 50	1.0 – 2.0	Stiff	8 – 15
Very Dense	> 50	2.0 – 4.0	Very Stiff	15 – 30
		> 4.0	Hard	> 30

PARTICLE SIZE DEFINITION (As per ASTM D2487 and D422)

Boulder	⇒ Larger than 12 inches	Coarse Sands	⇒ No. 10 to No. 4 sieve
Cobbles	⇒ 3 to 12 inches	Medium Sands	⇒ No. 40 to No. 10 sieve
Coarse Gravel	⇒ 3/4 to 3 inches	Fine Sands	⇒ No. 200 to 40 sieve
Fine Gravel	⇒ No. 4 to 3/4 inches	Silt	⇒ 5μm to No. 200 sieve
		Clay	⇒ Smaller than 5μm

SOIL CLASSIFICATION

Soils and bedrock are classified and described based on their engineering properties and characteristics using ASTM D2487 and D2488.

Percentage description of minor components:

Trace	1 – 10%	Some	20 – 35%
Little	10 – 20%	And or y	25 – 50%

Stratified soils description:

Parting	0 to 1/16 inch thick	Layer	½ to 12 inches thick
Seam	1/16 to ½ inch thick	Stratum	> 12 inches thick

TGR
Geotechnical
Environmental
Hydrogeology
Material Testing
Construction Inspection

LOG OF BORING EXPLANATION

SOIL CLASSIFICATION CHART

UNIFIED SOIL CLASSIFICATION AND SYMBOL CHART

COARSE-GRAINED SOILS (more than 50% of material is larger than No. 200 sieve size.)		
	Clean Gravels (Less than 5% fines)	
GRAVELS More than 50% of coarse fraction larger than No. 4 sieve size	GW	Well-graded gravels, gravel-sand mixtures, little or no fines
	GP	Poorly-graded gravels, gravel-sand mixtures, little or no fines
	Gravels with fines (More than 12% fines)	
	GM	Silty gravels, gravel-sand-silt mixtures
	GC	Clayey gravels, gravel-sand-clay mixtures
	Clean Sands (Less than 5% fines)	
SANDS 50% or more of coarse fraction smaller than No. 4 sieve size	SW	Well-graded sands, gravelly sands, little or no fines
	SP	Poorly graded sands, gravelly sands, little or no fines
	Sands with fines (More than 12% fines)	
	SM	Silty sands, sand-silt mixtures
	SC	Clayey sands, sand-clay mixtures
FINE-GRAINED SOILS (50% or more of material is smaller than No. 200 sieve size.)		
SILTS AND CLAYS Liquid limit less than 50%	ML	Inorganic silts and very fine sands, rock flour, silty of clayey fine sands or clayey silts with slight plasticity
	CL	Inorganic clays of low to medium plasticity, gravelly clays, sandy clays, silty clays, lean clays
	OL	Organic silts and organic silty clays of low plasticity
SILTS AND CLAYS Liquid limit 50% or greater	MH	Inorganic silts, micaceous or diatomaceous fine sandy or silty soils, elastic silts
	CH	Inorganic clays of high plasticity, fat clays
	OH	Organic clays of medium to high plasticity, organic silts
HIGHLY ORGANIC SOILS	PT	Peat and other highly organic soils

LABORATORY CLASSIFICATION CRITERIA

GW	$C_u = \frac{D_{60}}{D_{10}}$ greater than 4; $C_c = \frac{D_{30}}{D_{10} \times D_{60}}$ between 1 and 3	
GP	Not meeting all gradation requirements for GW	
GM	Atterberg limits below "A" line or P.I. less than 4	Above "A" line with P.I. between 4 and 7 are borderline cases requiring use of dual symbols
GC	Atterberg limits above "A" line with P.I. greater than 7	
SW	$C_u = \frac{D_{60}}{D_{10}}$ greater than 4; $C_c = \frac{D_{30}}{D_{10} \times D_{60}}$ between 1 and 3	
SP	Not meeting all gradation requirements for GW	
SM	Atterberg limits below "A" line or P.I. less than 4	Limits plotting in shaded zone with P.I. between 4 and 7 are borderline cases requiring use of dual symbols.
SC	Atterberg limits above "A" line with P.I. greater than 7	

Determine percentages of sand and gravel from grain-size curve. Depending on percentage of fines (fraction smaller than No. 200 sieve size), coarse-grained soils are classified as follows:

Less than 5 percent .... GW, GP, SW, SP
More than 12 percent .... GM, GC, SM, SC
5 to 12 percent .... Borderline cases requiring dual symbols

PLASTICITY CHART

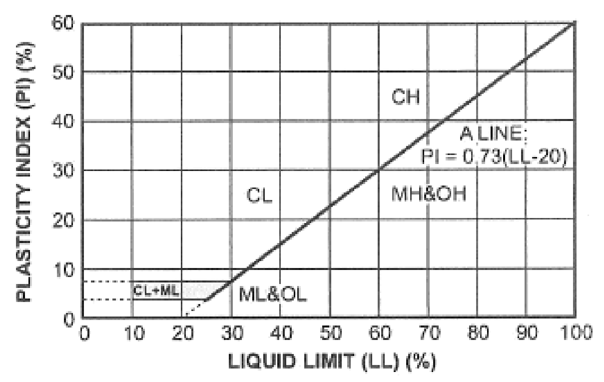

PARTICLE SIZE LIMITS

COBBLES	GRAVEL		SAND			SILT OR CLAY
	coarse	fine	coarse	medium	fine	

3” ¾” NO. 4 NO. 10 NO. 40 NO. 200

Geotechnical
Environmental
Hydrogeology
Material Testing
Construction Inspection

LOG OF BORING EXPLANATION

Page 2 of 2

LOG OF EXPLORATORY BORING B-1

Sheet **1** of **1**

Project Number:	**22-7455**	Logged By:	**RA**
Project Name:	**Colton Ave. and Wabash Ave., Redlands**	Project Engineer:	**SG**
Date Drilled:	**3/15/22 - 3/15/22**	Drill Type:	**Hollow Stem**
Ground Elev:	**1604**	Drive Wt & Drop:	**140lbs / 30in**

■ Shelby Tube
☒ Standard Split Spoon
◉ No recovery
⧗ Modified California
▼ Water Table ATD

Elevation (ft)	Depth (ft)	Graphic Log	FIELD RESULTS Bulk Sample	Drive Sample	SPT blows/ft (or equivalent N)	Pocket Pen (tsf)	USCS	SUMMARY OF SUBSURFACE CONDITIONS	LAB RESULTS Moisture Content (%)	Dry Density, (pcf)	Other Tests
								Surface is grass and vegetation.			
								NATIVE: Silty SAND- light brown, dry, medium dense, very fine to fine grained sand.			
1600											
	5			⧗	39		SP	SAND- grey and white, dry, dense, fine to coarse grained, fine to coarse grained gravel, cobbles.	1	117	Consol
								Total Depth: 8 feet due to refusal in cobbles. No groundwater encountered during drilling. No caving observed. Boring backfilled with soil cuttings upon completion. Ground elevation estimated with Google Earth.			
1595											
	10										
1590											

This Boring Log should be evaluated in conjunction with the complete geotechnical report. This Boring Log represents conditions observed at the specific location and date indicated, it is not warranted to be representative of subsurface conditions at other locations and times.

PLATE 2

TGR GEOTECHNICAL, INC.

LOG OF EXPLORATORY BORING B-2

Sheet **1** of **1**

Project Number:	**22-7455**	Logged By:	**RA**
Project Name:	**Colton Ave. and Wabash Ave., Redlands**	Project Engineer:	**SG**
Date Drilled:	**3/15/22 - 3/15/22**	Drill Type:	**Hollow Stem**
Ground Elev:	**1606**	Drive Wt & Drop:	**140lbs / 30in**

■ Shelby Tube
☒ Standard Split Spoon
◉ No recovery
⧗ Modified California
▼ Water Table ATD

Elevation (ft)	Depth (ft)	Graphic Log	FIELD RESULTS					SUMMARY OF SUBSURFACE CONDITIONS	LAB RESULTS		
			Bulk Sample	Drive Sample	SPT blows/ft (or equivalent N)	Pocket Pen (tsf)	USCS		Moisture Content (%)	Dry Density, (pcf)	Other Tests
			▬					Surface is grass and vegetation.			
1605			▬					NATIVE: Silty SAND- light brown, dry, stiff, very fine to fine grained sand, some fine to coarse grained gravel.			EI, Corrosion, R-Value
	5			⧗	46		SM	...Same as above, some cobbles.	2	109	
1600											
								Total Depth: 6.5 feet due to refusal in cobbles. No groundwater encountered during drilling. No caving observed. Boring backfilled with soil cuttings upon completion. Ground elevation estimated with Google Earth.			
	10										
1595											

PLATE 3

TGR GEOTECHNICAL, INC.

LOG OF EXPLORATORY BORING B-3

Sheet **1** of **1**

Project Number:	**22-7455**	Logged By:	**RA**
Project Name:	**Colton Ave. and Wabash Ave., Redlands**	Project Engineer:	**SG**
Date Drilled:	**3/15/22 - 3/15/22**	Drill Type:	**Hollow Stem**
Ground Elev:	**1611**	Drive Wt & Drop:	**140lbs / 30in**

■ Shelby Tube

☒ Standard Split Spoon

◉ No recovery

⧗ Modified California

▼ Water Table ATD

Elevation (ft)	Depth (ft)	Graphic Log	FIELD RESULTS					SUMMARY OF SUBSURFACE CONDITIONS	LAB RESULTS		
			Bulk Sample	Drive Sample	SPT blows/ft (or equivalent N)	Pocket Pen (tsf)	USCS		Moisture Content (%)	Dry Density, (pcf)	Other Tests
								Surface is grass and vegetation.			
1610								NATIVE: Silty SAND- light brown, dry, stiff, very fine to fine grained sand, some fine to coarse grained gravel.			
								Total Depth: 3 feet due to refusal in cobbles. No groundwater encountered during drilling. No caving observed. Boring backfilled with soil cuttings upon completion. Ground elevation estimated with Google Earth.			
	5										
1605											
	10										
1600											

This Boring Log should be evaluated in conjunction with the complete geotechnical report. This Boring Log represents conditions observed at the specific location and date indicated, it is not warranted to be representative of subsurface conditions at other locations and times.

PLATE 4

TGR GEOTECHNICAL, INC.

LOG OF EXPLORATORY BORING B-4

Sheet **1** of **1**

Project Number: **22-7455**
Project Name: **Colton Ave. and Wabash Ave., Redlands**
Date Drilled: **3/15/22 - 3/15/22**
Ground Elev: **1603**

Logged By: **RA**
Project Engineer: **SG**
Drill Type: **Hollow Stem**
Drive Wt & Drop: **140lbs / 30in**

■ Shelby Tube
☒ Standard Split Spoon
◉ No recovery
⧗ Modified California
▼ Water Table ATD

Elevation (ft)	Depth (ft)	Graphic Log	FIELD RESULTS				SUMMARY OF SUBSURFACE CONDITIONS	LAB RESULTS		
			Bulk Sample	Drive Sample	SPT blows/ft (or equivalent N)	Pocket Pen (tsf)	USCS		Moisture Content (%)	Dry Density, (pcf)	Other Tests
								Surface is grass and vegetation.			
								NATIVE: Silty <u>SAND</u>- light brown, dry, stiff, very fine to fine grained sand, some fine to coarse grained gravel.			
1600											
	5			⧗	46		SP	<u>SAND</u>- light brown, slightly moist, very dense, fine to coarse grained sand, fine to coarse grained gravel, cobbles.	3	117	
								Total Depth: 6.5 feet due to refusal in cobbles. No groundwater encountered during drilling. No caving observed. Boring backfilled with soil cuttings upon completion. Ground elevation estimated with Google Earth.			
1595											
	10										
1590											

This Boring Log should be evaluated in conjunction with the complete geotechnical report. This Boring Log represents conditions observed at the specific location and date indicated, it is not warranted to be representative of subsurface conditions at other locations and times.

PLATE 5

TGR GEOTECHNICAL, INC.

LOG OF EXPLORATORY BORING B-5/P-1

Sheet **1** of **1**

Project Number:	**22-7455**	Logged By:	**RA**
Project Name:	**Colton Ave. and Wabash Ave., Redlands**	Project Engineer:	**SG**
Date Drilled:	**3/15/22 - 3/15/22**	Drill Type:	**Hollow Stem**
Ground Elev:	**1607**	Drive Wt & Drop:	**140lbs / 30in**

■ Shelby Tube
☒ Standard Split Spoon
◉ No recovery
⧗ Modified California
▼ Water Table ATD

Elevation (ft)	Depth (ft)	Graphic Log	FIELD RESULTS: Bulk Sample	Drive Sample	SPT blows/ft (or equivalent N)	Pocket Pen (tsf)	USCS	SUMMARY OF SUBSURFACE CONDITIONS	LAB RESULTS: Moisture Content (%)	Dry Density, (pcf)	Other Tests
								Surface is grass and vegetation.			
								NATIVE: Silty <u>SAND</u>- light brown, dry, stiff, very fine to fine grained sand, some fine to coarse grained gravel.			
1605											
	5			⧗	50		SP	<u>SAND</u>- light brown, dry, very dense, fine grained sand, fine to coarse grained gravel, some silt.	2	113	-200= 5.7%
1600											
			☰				SP		2		-200= 10.2%
								Total Depth: 9 feet due to refusal in cobbles. No groundwater encountered during drilling. No caving observed. Boring utilized for percolation testing. Boring backfilled with soil cuttings upon completion. Ground elevation estimated with Google Earth.			
	10										
1595											

This Boring Log should be evaluated in conjunction with the complete geotechnical report. This Boring Log represents conditions observed at the specific location and date indicated, it is not warranted to be representative of subsurface conditions at other locations and times.

PLATE 6

TGR GEOTECHNICAL, INC.

LOG OF EXPLORATORY BORING B-6

Sheet **1** of **1**

Project Number: **22-7455**
Project Name: **Colton Ave. and Wabash Ave., Redlands**
Date Drilled: **3/15/22 - 3/15/22**
Ground Elev: **1611**
Logged By: **RA**
Project Engineer: **SG**
Drill Type: **Hollow Stem**
Drive Wt & Drop: **140lbs / 30in**

■ Shelby Tube
☒ Standard Split Spoon
● No recovery
⧗ Modified California
▼ Water Table ATD

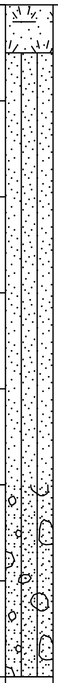

Elevation (ft)	Depth (ft)	Graphic Log	FIELD RESULTS Bulk Sample	Drive Sample	SPT blows/ft (or equivalent N)	Pocket Pen (tsf)	USCS	SUMMARY OF SUBSURFACE CONDITIONS	LAB RESULTS Moisture Content (%)	Dry Density, (pcf)	Other Tests
								Surface is grass and vegetation.			
1610								NATIVE: Silty SAND- light brown, dry, stiff, very fine to fine grained sand, some fine to coarse grained gravel.			
								...Same as above, cobbles.			
	5			⧗	53		SPG	Gravelly SAND- grey brown, dry, very dense, fine to coarse grained sand, fine to coarse grained gravel, cobbles.	2	115	Consol
1605											
								Total Depth: 7 feet due to refusal in cobbles. No groundwater encountered during drilling. No caving observed. Boring backfilled with soil cuttings upon completion. Ground elevation estimated with Google Earth.			
	10										
1600											

This Boring Log should be evaluated in conjunction with the complete geotechnical report. This Boring Log represents conditions observed at the specific location and date indicated, it is not warranted to be representative of subsurface conditions at other locations and times.

PLATE 7

TGR GEOTECHNICAL, INC.

LOG OF EXPLORATORY BORING B-7

Sheet **1** of **1**

Project Number:	**22-7455**	Logged By:	**RA**
Project Name:	**Colton Ave. and Wabash Ave., Redlands**	Project Engineer:	**SG**
Date Drilled:	**3/15/22 - 3/15/22**	Drill Type:	**Hollow Stem**
Ground Elev:	**1605**	Drive Wt & Drop:	**140lbs / 30in**

■ Shelby Tube ☒ Standard Split Spoon ◉ No recovery

⧓ Modified California ▼ Water Table ATD

Elevation (ft)	Depth (ft)	Graphic Log	FIELD RESULTS					SUMMARY OF SUBSURFACE CONDITIONS	LAB RESULTS		
			Bulk Sample	Drive Sample	SPT blows/ft (or equivalent N)	Pocket Pen (tsf)	USCS		Moisture Content (%)	Dry Density, (pcf)	Other Tests
								Surface is grass and vegetation.			
								NATIVE: Silty <u>SAND</u>- light brown, dry, stiff, very fine to fine grained sand, some fine to coarse grained gravel.			
1600	5			⧓				...Same as above, cobbles.			
					59		SM		2	103	
								Total Depth: 7 feet due to refusal in cobbles. No groundwater encountered during drilling. No caving observed. Boring backfilled with soil cuttings upon completion. Ground elevation estimated with Google Earth.			
1595	10										

This Boring Log should be evaluated in conjunction with the complete geotechnical report. This Boring Log represents conditions observed at the specific location and date indicated, it is not warranted to be representative of subsurface conditions at other locations and times.

PLATE 8

TGR GEOTECHNICAL, INC.

LOG OF EXPLORATORY BORING B-8

Sheet **1** of **1**

Project Number: **22-7455**
Project Name: **Colton Ave. and Wabash Ave., Redlands**
Date Drilled: **3/15/22 - 3/15/22**
Ground Elev: **1608**

Logged By: **RA**
Project Engineer: **SG**
Drill Type: **Hollow Stem**
Drive Wt & Drop: **140lbs / 30in**

■	Shelby Tube
☒	Standard Split Spoon
◉	No recovery
⧗	Modified California
▼	Water Table ATD

Elevation (ft)	Depth (ft)	Graphic Log	FIELD RESULTS Bulk Sample	Drive Sample	SPT blows/ft (or equivalent N)	Pocket Pen (tsf)	USCS	SUMMARY OF SUBSURFACE CONDITIONS	LAB RESULTS Moisture Content (%)	Dry Density, (pcf)	Other Tests
			▬					Surface is grass and vegetation.			
1605			▬				SM	NATIVE: Silty SAND- light brown, dry, stiff, very fine to fine grained sand, some fine to coarse grained gravel.			Max, Shear
	5			⧗	14		SP	SAND- grey brown, dry, medium dense, fine to coarse grained sand, fine to coarse grained gravel, cobbles, some silt.	2	107	Consol
1600								Total Depth: 8 feet due to refusal in cobbles. No groundwater encountered during drilling. No caving observed. Boring backfilled with soil cuttings upon completion. Ground elevation estimated with Google Earth.			
	10										
1595											

PLATE 9

TGR GEOTECHNICAL, INC.

LOG OF EXPLORATORY BORING B-9

Sheet **1** of **1**

Project Number: **22-7455**
Project Name: **Colton Ave. and Wabash Ave., Redlands**
Date Drilled: **3/15/22 - 3/15/22**
Ground Elev: **1611**

Logged By: **RA**
Project Engineer: **SG**
Drill Type: **Hollow Stem**
Drive Wt & Drop: **140lbs / 30in**

■ Shelby Tube
☒ Standard Split Spoon
◉ No recovery
⧗ Modified California
▼ Water Table ATD

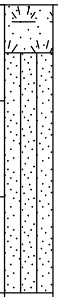

Elevation (ft)	Depth (ft)	Graphic Log	FIELD RESULTS					SUMMARY OF SUBSURFACE CONDITIONS	LAB RESULTS		
			Bulk Sample	Drive Sample	SPT blows/ft (or equivalent N)	Pocket Pen (tsf)	USCS		Moisture Content (%)	Dry Density, (pcf)	Other Tests
								Surface is grass and vegetation.			
1610								NATIVE: Silty SAND- light brown, dry, stiff, very fine to fine grained sand, some fine to coarse grained gravel.			
								Total Depth: 3 feet due to refusal in cobbles. No groundwater encountered during drilling. No caving observed. Boring backfilled with soil cuttings upon completion. Ground elevation estimated with Google Earth.			
	5										
1605											
	10										
1600											

This Boring Log should be evaluated in conjunction with the complete geotechnical report. This Boring Log represents conditions observed at the specific location and date indicated, it is not warranted to be representative of subsurface conditions at other locations and times.

PLATE 10

TGR GEOTECHNICAL, INC.

LOG OF EXPLORATORY BORING P-2

Sheet **1** of **1**

Project Number:	**22-7455**	Logged By:	**RA**
Project Name:	**Colton Ave. and Wabash Ave., Redlands**	Project Engineer:	**SG**
Date Drilled:	**3/15/22 - 3/15/22**	Drill Type:	**Hollow Stem**
Ground Elev:	**1606**	Drive Wt & Drop:	**140lbs / 30in**

■ Shelby Tube ☒ Standard Split Spoon ◉ No recovery ⧗ Modified California ▼ Water Table ATD

Elevation (ft)	Depth (ft)	Bulk Sample	Drive Sample	SPT blows/ft (or equivalent N)	Pocket Pen (tsf)	USCS	SUMMARY OF SUBSURFACE CONDITIONS	Moisture Content (%)	Dry Density, (pcf)	Other Tests
	0						Surface is grass and vegetation.			
1605							NATIVE: Silty <u>SAND</u>- light brown, dry, stiff, very fine to fine grained sand, some fine to coarse grained gravel.			
1600	5		⧗	16		SP	<u>SAND</u>- light brown, dry, medium dense, fine grained sand, fine to coarse grained gravel, cobbles.	2	117	-200= 10.3%
1595	10						Total Depth: 9 feet due to refusal in cobbles. No groundwater encountered during drilling. No caving observed. Boring utilized for percolation testing. Boring backfilled with soil cuttings upon completion. Ground elevation estimated with Google Earth.			

This Boring Log should be evaluated in conjunction with the complete geotechnical report. This Boring Log represents conditions observed at the specific location and date indicated, it is not warranted to be representative of subsurface conditions at other locations and times.

PLATE 11

TGR GEOTECHNICAL, INC.

APPENDIX C
LABORATORY TEST RESULTS

APPENDIX C

Laboratory Testing Procedures and Results

In-Situ Moisture and Dry Density Determination (ASTM D2216 and D7263): Moisture content and dry density determinations were performed on relatively undisturbed samples obtained from the test borings. The results of these tests are presented in the boring logs. Where applicable, only moisture content was determined from "undisturbed" or disturbed samples.

Maximum Density and Optimum Moisture Content (ASTM D1557): The maximum dry density and optimum moisture content of typical materials were determined in accordance with ASTM Test Method D1557. The results of these tests are presented in the table below:

Sample Location	Sample Description	Maximum Dry Density (pcf)	Optimum Moisture Content (%)
B-8 @ 0-5 feet	Silty Sand	123.5	7.0

Direct Shear Strength (ASTM D3080): Direct shear test was performed on selected remolded samples, which were soaked for a minimum of 24 hours under a surcharge equal to the applied normal force during testing. After transfer of the sample to the shear box, and reloading the sample, pore pressures set up in the sample due to the transfer were allowed to dissipate for a period of approximately 1-hour prior to application of shearing force. The sample was tested under various normal loads, a motor-driven, strain-controlled, direct-shear testing apparatus at a strain rate of less than 0.001 to 0.5 inches per minute (depending upon the soil type). The test results are presented in the test data and in the table below:

Sample Location	Sample Description	Friction Angle (degrees)	Apparent Cohesion (psf)
B-8 @ 0-5 feet	Silty Sand (Remolded)	33	114

Consolidation Tests (ASTM D2435): Consolidation test were performed on selected, relatively undisturbed ring samples. Samples were placed in a consolidometer and loads were applied in geometric progression. The percent consolidation for each load cycle was recorded as the ratio of the amount of vertical compression to the original 1-inch height. The consolidation pressure curves are presented in the test data.

Expansion Potential (ASTM D4829): The expansion potential of selected materials was evaluated by the Expansion Index Test, ASTM D4829. Specimens are molded under a given compactive energy to approximately the optimum moisture content and approximately 50 percent saturation or approximately 90 percent relative compaction. The prepared 1-inch thick by 4-inch diameter specimens are loaded to an equivalent 144 psf surcharge and are inundated with tap water until volumetric equilibrium is reached. The results of these tests are presented in the table below:

Sample Location	Sample Description	Expansion Index	Expansion Potential
B-2 @ 0-5 feet	Silty Sand	0	Very Low

Soluble Sulfate (CAL 417A): The soluble sulfate content of selected sample was determined by standard geochemical methods. The test results are presented in the test data and in the table below:

Sample Location	Sample Description	Water Soluble Sulfate in Soil, (% by Weight)	Sulfate Content (ppm)	Exposure Class*
B-2 @ 0-5 feet	Silty Sand	0.0123	123	S0

* Based on the current version of ACI 318-14 Building Code, Table No. 19.3.1.1; Exposure Categories and Classes.

Corrosivity Tests (CAL 422, CAL 643 and CAL 747): Electrical conductivity, pH, and soluble chloride tests were conducted on representative samples and the results are provided in the test data and in the table below:

Sample Location	Sample Description	Soluble Chloride (CAL 422) (ppm)	Electrical Resistivity (CAL 643) (ohm-cm)	pH (CAL 747)	Potential Degree of Attack on Steel
B-2 @ 0-5 feet	Silty Sand	65	11,000	7.8	Mild

Passing No. 200 Sieve (ASTM D1140): Typical materials were washed over No. 200 sieve. The test results are presented in the boring logs and in the table below:

Sample Location	% Passing No. 200 Sieve
B-5/P-1 @ 5 feet	5.7
B-5/P-1 @ 8.5-9 feet	10.2
P-2 @ 5 feet	10.3

R-Value: The resistance “R”-Value was determined by the California Materials Method No. 301 for subgrade soils. One sample was prepared, and exudation pressure and “R”-Value determined. The graphically determined “R”-Value at exudation pressure of 300 psi is summarized in the table below:

Sample Location	Sample Description	R-Value
B-2 @ 0-5 feet	Silty Sand	73

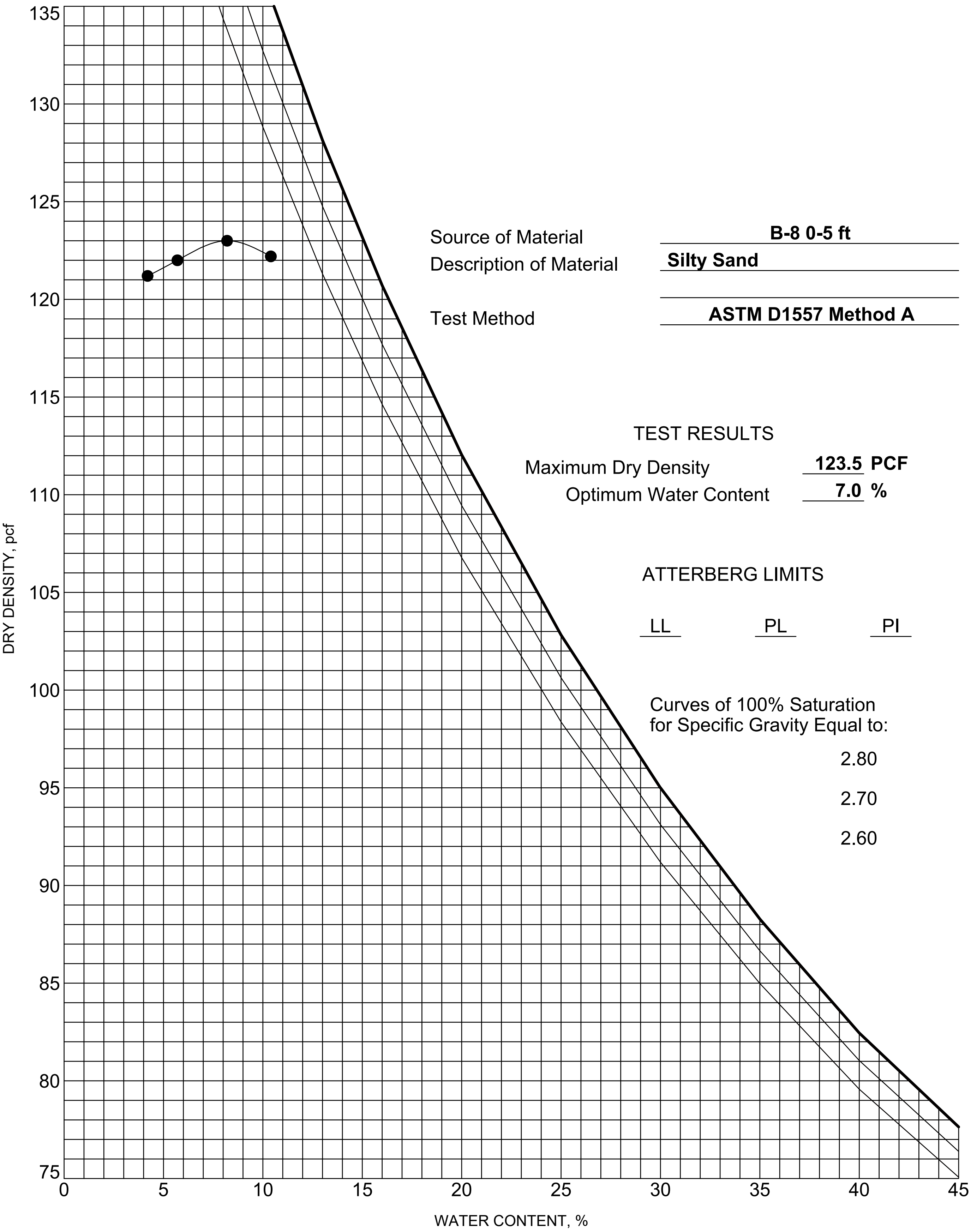

Source of Material **B-8 0-5 ft**

Description of Material **Silty Sand**

Test Method **ASTM D1557 Method A**

TEST RESULTS

Maximum Dry Density **123.5 PCF**

Optimum Water Content **7.0 %**

ATTERBERG LIMITS

LL	PL	PI

Curves of 100% Saturation
for Specific Gravity Equal to:

2.80

2.70

2.60

TGR GEOTECHNICAL, INC.

3037 S. Harbor Blvd
Santa Ana, CA 92704
Telephone: 714-641-7189
Fax: 714-641-7190

MOISTURE-DENSITY RELATIONSHIP

Project Number: 22-7455

Project Name: Colton Ave. and Wabash Ave., Redlands

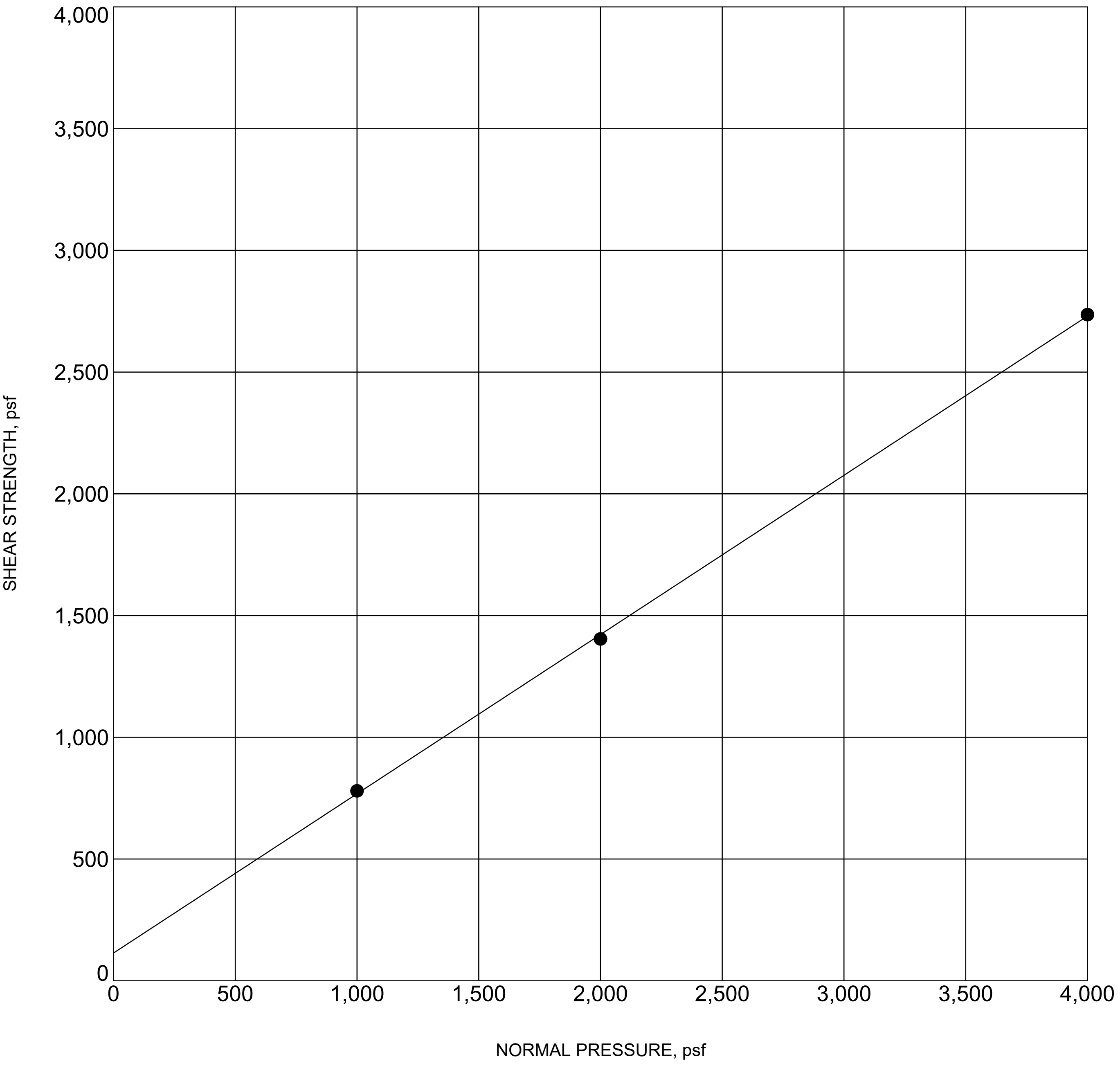

	Specimen Identification		Classification	γ_d	MC%	c	ϕ
●	**B-8**	**0-5**	**Silty Sand - Remolded - 90% RC**	**111**	**7**	**114**	**33**

TGR GEOTECHNICAL, INC.

3037 S. Harbor Blvd
Santa Ana, CA 92704
Telephone: 714-641-7189
Fax: 714-641-7190

DIRECT SHEAR TEST

Project Number: 22-7455

Project Name: Colton Ave. and Wabash Ave., Redlands

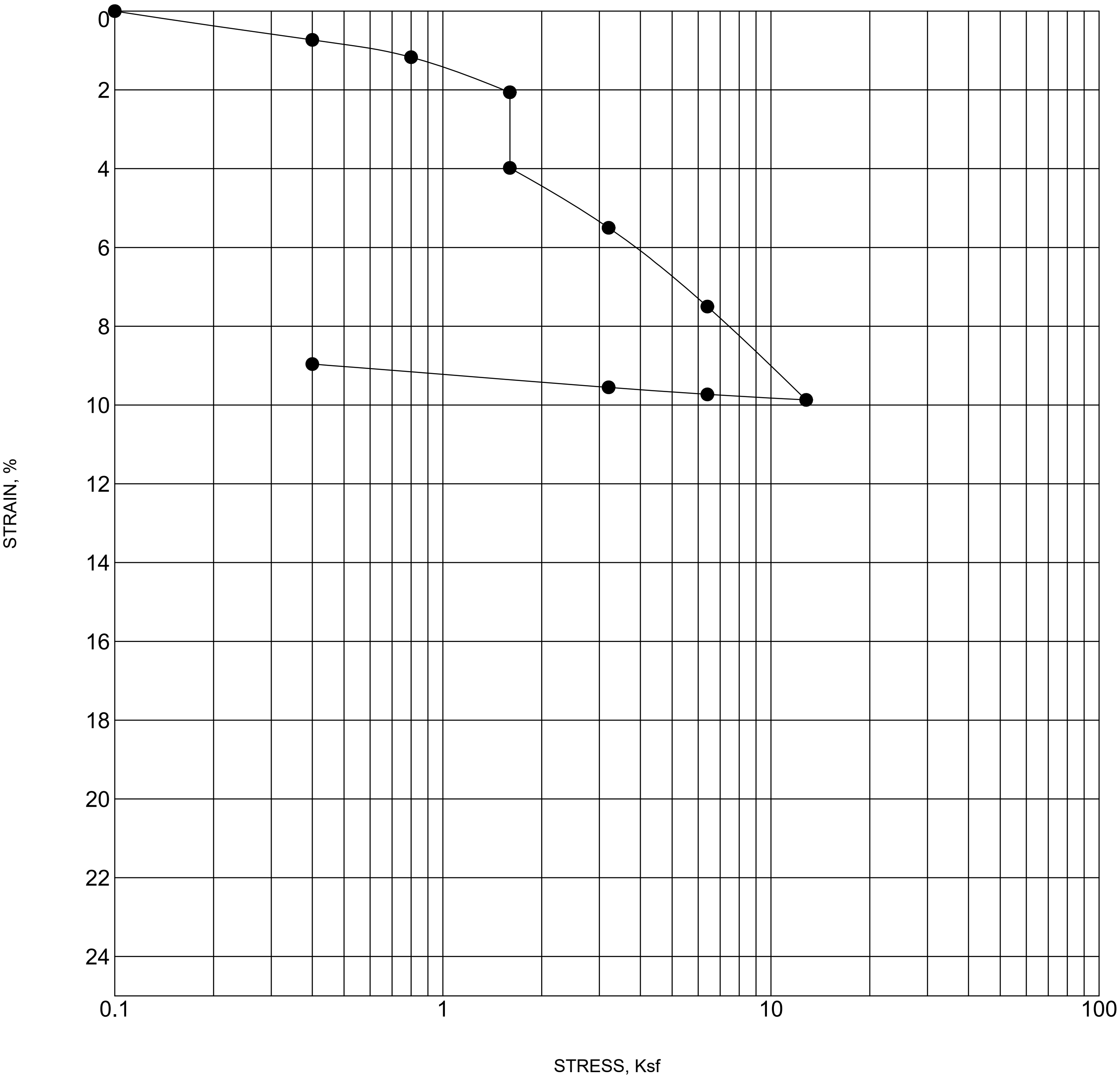

	Specimen Identification		Classification	γ_d	MC%
●	**B-1**	**5.0**	**Sand**	**117**	**1**

TGR GEOTECHNICAL, INC.

3037 S. Harbor Blvd
Santa Ana, CA 92704
Telephone: 714-641-7189
Fax: 714-641-7190

CONSOLIDATION TEST

Project Number: 22-7455

Project Name: Colton Ave. and Wabash Ave., Redlands

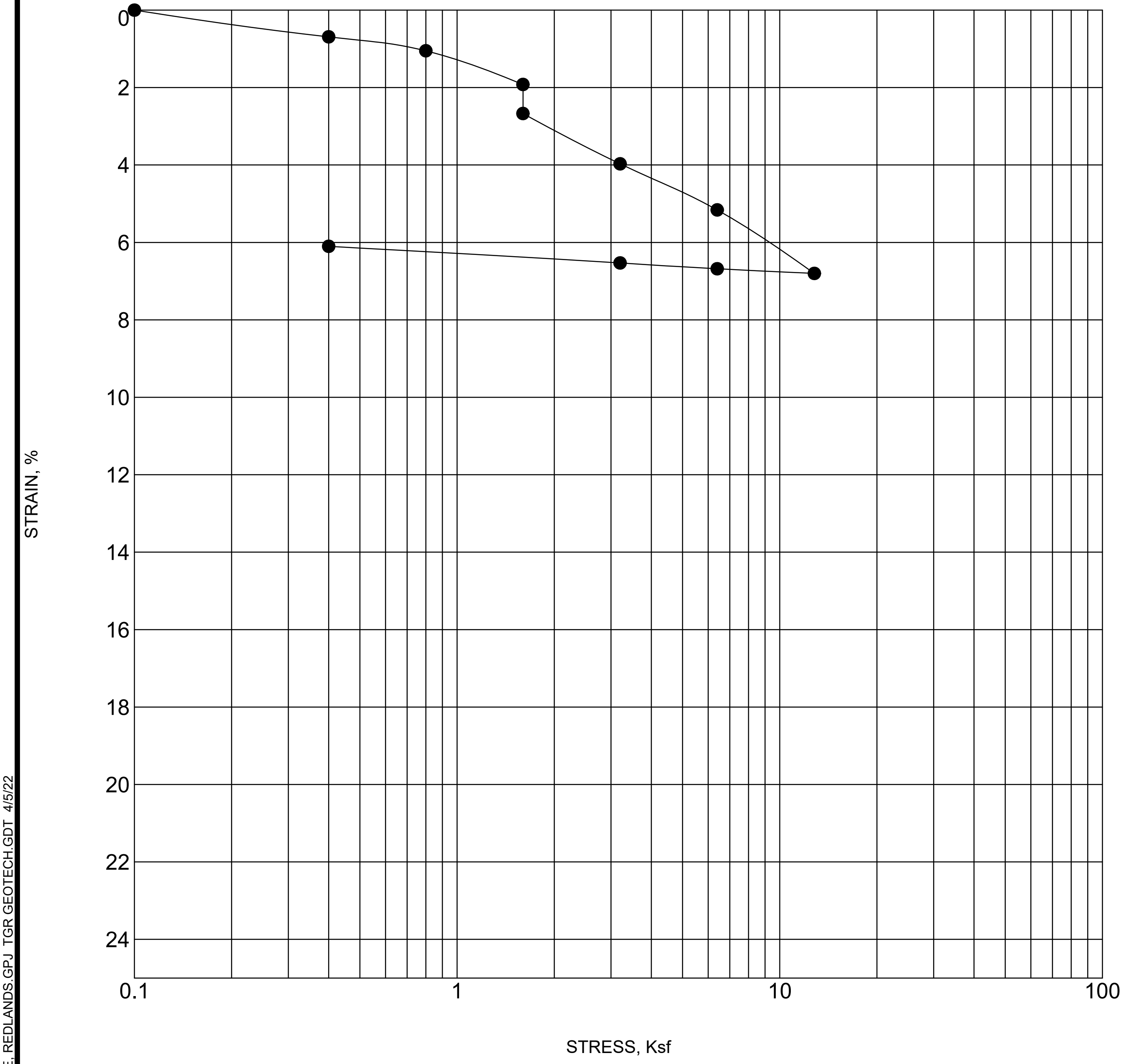

	Specimen Identification		Classification	γ_d	MC%
●	**B-6**	**5.0**	**Gravelly Sand**	**115**	**2**

CONSOLIDATION TEST

TGR GEOTECHNICAL, INC.

3037 S. Harbor Blvd
Santa Ana, CA 92704
Telephone: 714-641-7189
Fax: 714-641-7190

Project Number: 22-7455

Project Name: Colton Ave. and Wabash Ave., Redlands

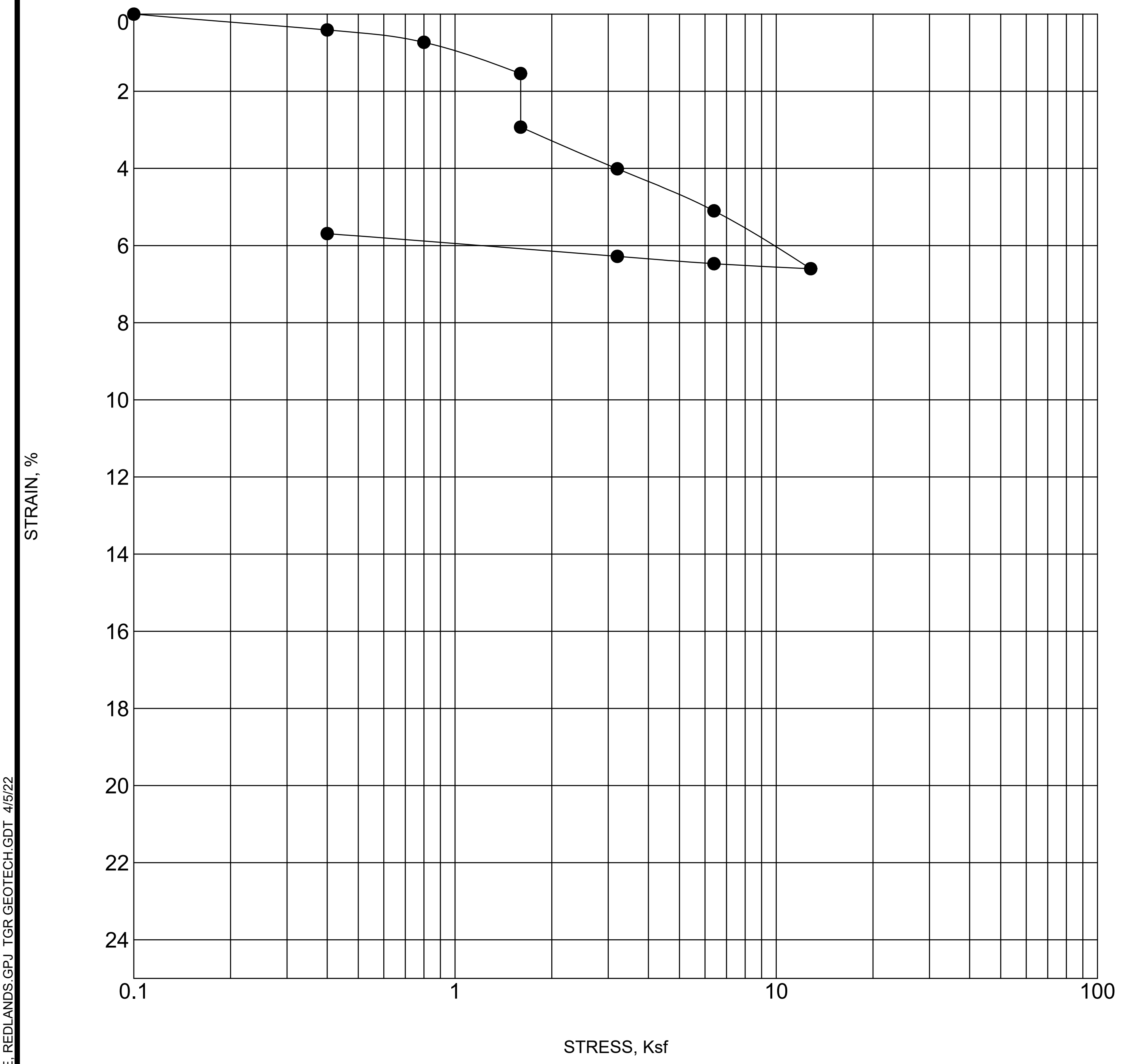

	Specimen Identification		Classification	γ_d	MC%
●	**B-8**	**5.0**		**107**	**2**

TGR GEOTECHNICAL, INC.

3037 S. Harbor Blvd
Santa Ana, CA 92704
Telephone: 714-641-7189
Fax: 714-641-7190

CONSOLIDATION TEST

Project Number: 22-7455

Project Name: Colton Ave. and Wabash Ave., Redlands

ANAHEIM TEST LAB, INC
196 Technology Dr., Unit D
Irvine, CA 92618
Phone (949) 336-6544

TO:

TGR GEOTECHNICAL
3037 S. HARBOR BLVD.
SANTA ANA, CA 92704

DATE: 3/31/2022

P.O. NO: VERBAL

LAB NO: C-5800

SPECIFICATION: CTM-643/417/422

MATERIAL: Soil

Project No.: 22-7455
Project: Colton - Redlands
Sample ID: B2 @ 0-5'

ANALYTICAL REPORT

CORROSION SERIES

SUMMARY OF DATA

pH	MIN. RESISTIVITY per CT. 643 ohm-cm	SOLUBLE SULFATES per CT. 417 ppm	SOLUBLE CHLORIDES per CT. 422 ppm
7.8	11,000	123	65

RESPECTFULLY SUBMITTED

WES BRIDGER LAB MANAGER

ANAHEIM TEST LAB, INC
196 Technology Drive, Unit D
Irvine, CA 92618
Phone (949) 336-6544

TO:

TGR GEOTECHNICAL
3037 S. HARBOR BLVD.
SANTA ANA, CA. 92704

DATE: 3/24/2022

P.O. NO.: VERBAL

LAB NO.: C-5801

SPECIFICATION: CTM- 301

MATERIAL: Brown, Silty Sand w. trace F. Gravel

Project No.: 22-7455
Project: Colton - Redlands
Sample ID: B2 @ 0-5'

ANALYTICAL REPORT

"R" VALUE

BY EXUDATION	BY EXPANSION
73	N/A

RESPECTFULLY SUBMITTED

WES BRIDGER LAB MANAGER

"R" VALUE CA 301

Client: TGR Geotechnical **ATL No.:** C 5801 **Date:** 3/24/2022
Client Reference No.: 22-7455
Sample: B2 @ 0-5' **Soil Type:** Brown, Silty Sand w. trace F. Gravel

.

TEST SPECIMEN		A	B	C	D
Compactor Air Pressure	psi	350	350	350	
Initial Moisture Content	%	1.7	1.7	1.7	
Moisture at Compaction	%	9.3	8.7	9.1	
Briquette Height	in.	2.52	2.44	2.48	
Dry Density	pcf	124.0	125.5	124.8	
EXUDATION PRESSURE	psi	270	755	416	
EXPANSION PRESSURE	psf	26	139	87	
Ph at 1000 pounds	psi	18	15	17	
Ph at 2000 pounds	psi	33	28	30	
Displacement	turns	3.74	3.33	3.62	
"R" Value		72	78	75	
CORRECTED "R" VALUE		72	78	75	

Final "R" Value	
BY EXUDATION: @ 300 psi	**73**
BY EXPANSION: TI = 5.0	**N/A**

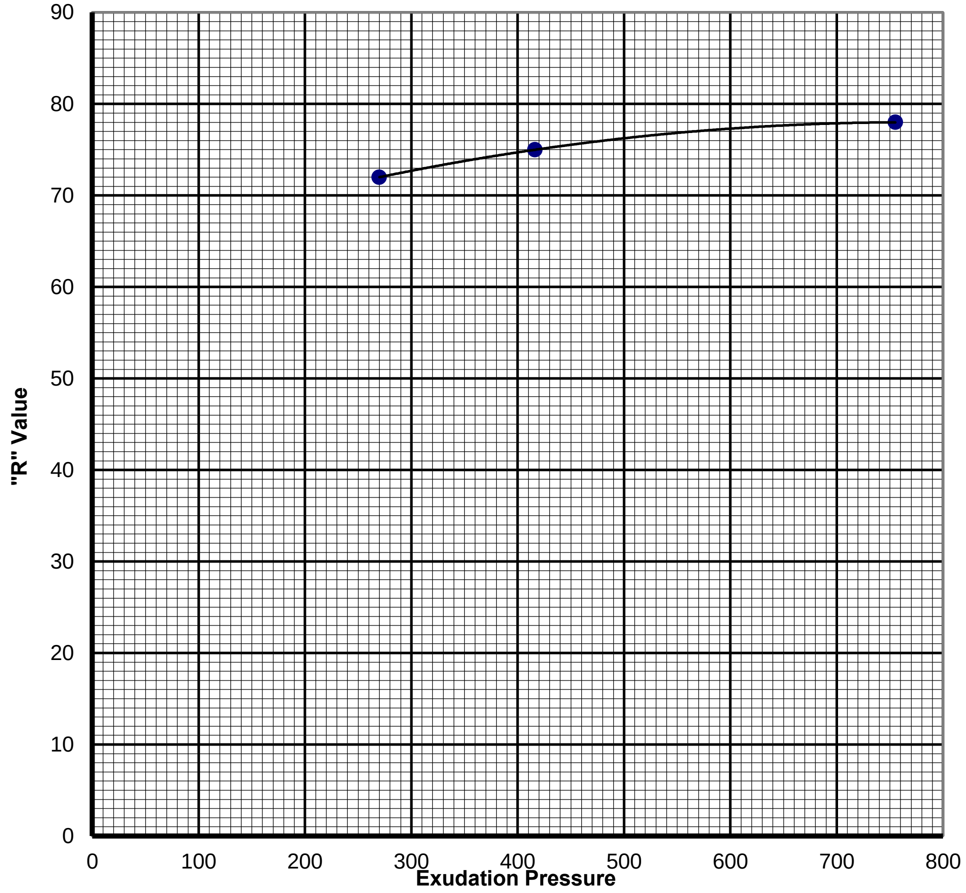

APPENDIX D
SITE SEISMICITY AND DEAGGREGATED PARAMETERS

TABLE 1
SITE SPECIFIC GROUND MOTION ANALYSIS
22-7455 E. Colton Avenue and N. Wabash Avenue, Redlands

SA Period (sec)	Probabilistic Spectral Acceleration MCER (g)	Deterministic Spectral Acceleration (g)	Is Largest Deterministic Spectral Acceleration <1.5*Fa	Deterministic MCER	Site Specific MCER	2/3 of Site Specific MCER	80% Code Design	Site Specific Design Response Spectrum
	Rotated Maximum	Rotated Maximum 84th Percentile						
0	1.1374	0.7488	No	0.7488	0.7488	0.4992	0.4083	0.4992
0.1	1.8975	1.1212		1.1212	1.1212	0.7475	0.7055	0.7475
0.2	2.4849	1.5300		1.5300	1.5300	1.0200	1.0208	1.0208
0.3	2.8575	1.8442		1.8442	1.8442	1.2295	1.0208	1.2295
0.5	2.9634	2.0185		2.0185	2.0185	1.3457	1.0208	1.3457
0.75	2.6198	1.8138		1.8138	1.8138	1.2092	1.0208	1.2092
1	2.3673	1.6567		1.6567	1.6567	1.1045	1.0520	1.1045
2	1.4688	1.0058		1.0058	1.0058	0.6705	0.5260	0.6705
3	1.0626	0.7045		0.7045	0.7045	0.4697	0.3507	0.4697
4	0.8120	0.5124		0.5124	0.5124	0.3416	0.2630	0.3416
5	0.6435	0.3854		0.3854	0.3854	0.2569	0.2104	0.2569

Code Sds	1.276	Crs =	0.914	Code Ss =	1.914	**Site Specific SDS =**	**1.211**
Code Sd1	1.315	Cr1 =	0.891	Code S1 =	0.789	**Site Specific SD1 =**	**1.409**
To	0.21	Code Fa =	1	Sms =	1.914		
Ts	1.03	Code Fv =	2.5	Sm1 =	1.9725		
TL	8						
Input							

FIGURE 1
Site Specific Design Response Spectra
22-7455 E. Colton Avenue and N. Wabash Avenue, Redlands

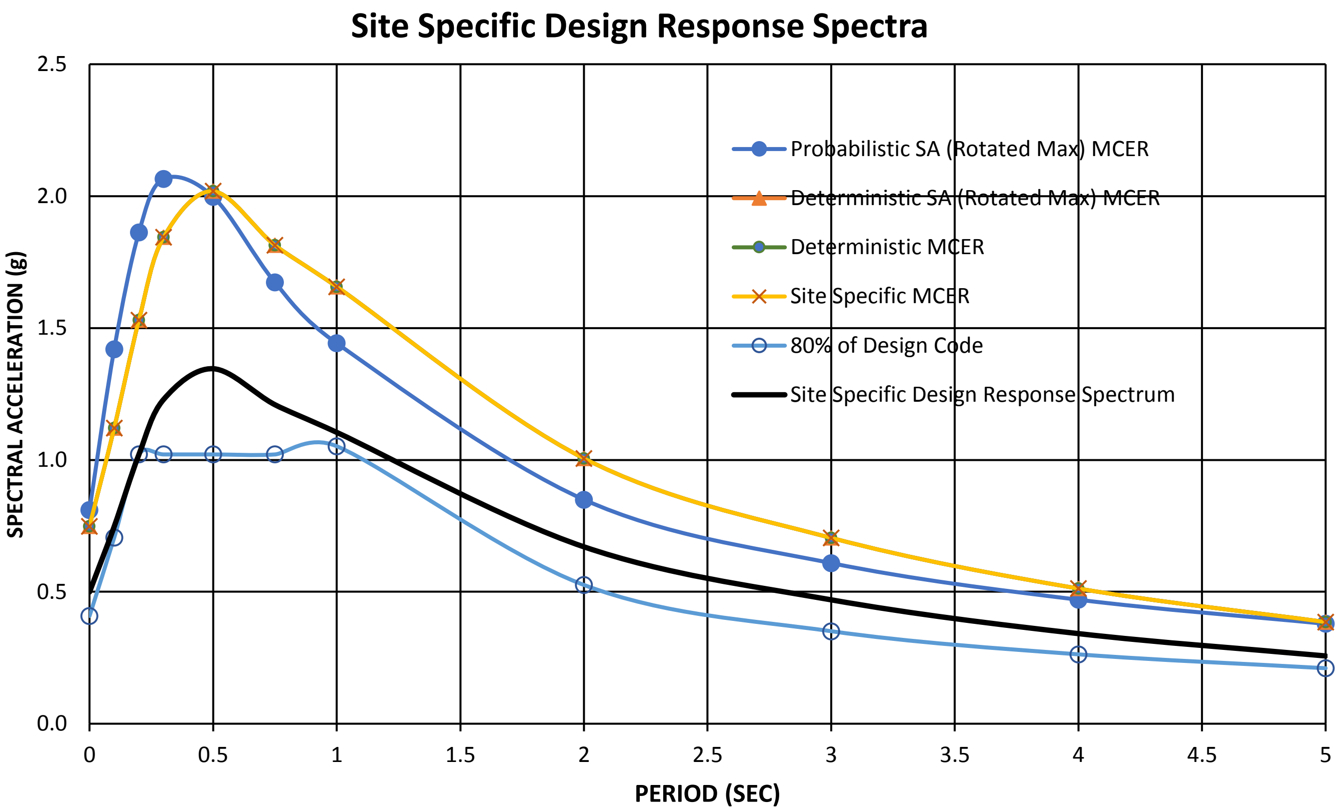

TABLE 2

Probabilistic Response Spectrum ASCE 7-16 Method 2

22-7455 E. Colton Avenue and N. Wabash Avenue, Redlands

Period (g)	UHGM (g)	RTGM (g)	Max Dir Scale factor	Max Dir RTGM (g)
0	1.059	1.034	1.1	1.137
0.1	1.740	1.725	1.1	1.898
0.2	2.276	2.259	1.1	2.485
0.3	2.611	2.540	1.125	2.858
0.5	2.694	2.522	1.175	2.963
0.75	2.326	2.117	1.2375	2.620
1	2.026	1.821	1.3	2.367
2	1.226	1.088	1.35	1.469
3	0.863	0.759	1.4	1.063
4	0.640	0.560	1.45	0.812
5	0.489	0.429	1.5	0.644

Probabilistic Response Spectra per ASCE 7-16

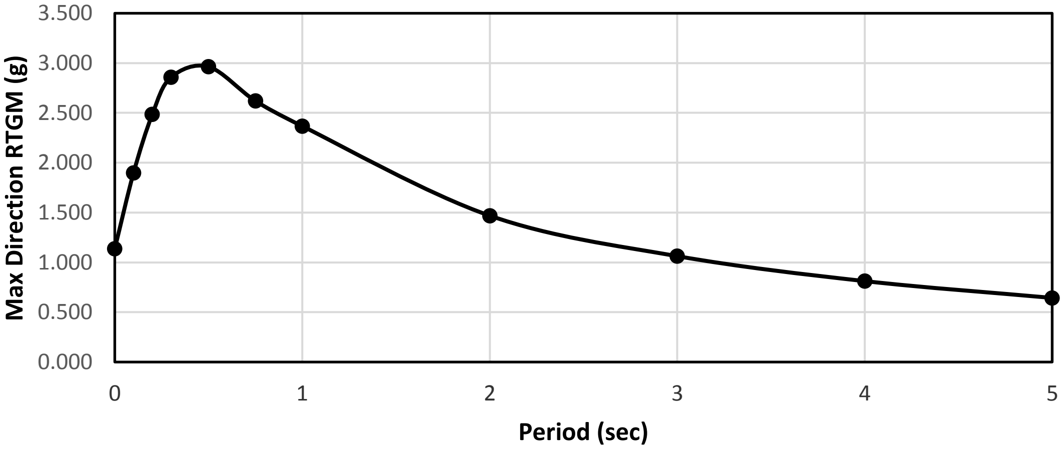

TABLE 3

Deterministic Response Spectrum ASCE 7-16 - San Andreas (San Bernardino S)

22-7455 E. Colton Avenue and N. Wabash Avenue, Redlands

Period (g)	84th-Percentile Spectral Acceleration (g)	Max Dir Scale factor	Max Dir Deterministic SA (g)
0.01	0.681	1.1	0.749
0.1	1.019	1.1	1.121
0.2	1.391	1.1	1.530
0.3	1.639	1.125	1.844
0.5	1.718	1.175	2.019
0.75	1.466	1.2375	1.814
1	1.274	1.3	1.657
2	0.745	1.35	1.006
3	0.503	1.4	0.704
4	0.353	1.45	0.512
5	0.257	1.5	0.385

Deterministic Response Spectra per ASCE 7-16

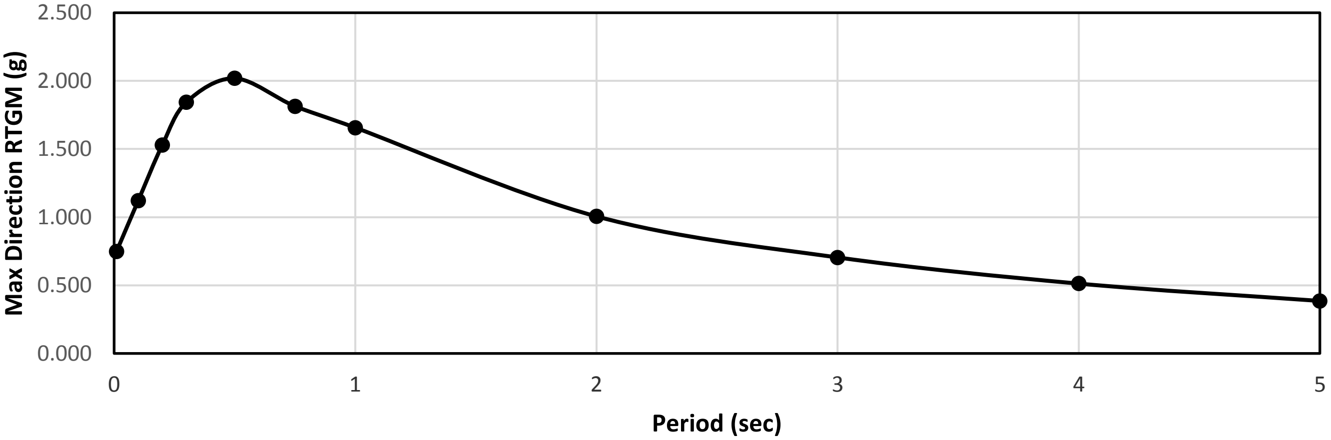

PACIFIC EARTHQUAKE ENGINEERING RESEARCH CENTER

WEIGHTED AVERAGE of 2014 NGA WEST-2 GMPEs

Last updated: 04 14 15

by Emel Seyhan, PhD, PEER & UCLA -- email: emel.seyhan@gmail.com, peer_center@berkeley.edu

San Andreas (San Bernardino S) fault

This excel file will be updated as necessary on the PEER website to fix any typos or other errors. Please check the website frequently for new versions at: http://peer.berkeley.edu/ngawest2/databases/

Legend	Pre-defined option	Main input variable	Calculated variable	Input var. flag	Internal variable

GMPE averaging	Geometric	*Weighted average of the natural logarithm of the spectral values*

GMPEs	ASK14	BSSA14	CB14	CY14	I14
Weight	0.25	0.25	0.25	0.25	0

# of std. dev.	1	
Damping ratio (%)	5	*Modification factors are calculated in Sheet DSF*

ASK14 Abrahamson & Silva & Kamai 2014 NGA West-2 Model
BSSA14 Boore & Stewart & Seyhan & Atkinson 2014 NGA West-2 Model
CB14 Campbell & Bozorgnia 2014 NGA West-2 Model
CY14 Chiou & Youngs 2014 NGA West-2 Model
I14 Idriss 2014 NGA West-2 Model

Input variables	Errors and warnings
M_w	
7.47	
R_{RUP} (km)	
5.81	
R_{JB} (km)	
5.81	
R_X (km)	
5.81	
Ry0 (km)	*If unknown use 999*
999	
V_{S30} (m/sec)	
260	
U (BSSA13)	*1: Unspecified fault mech.*
1	
F_{RV}	*1: reverse fault*
0	
F_{NM}	*1: normal fault*
0	
F_{HW}	*1: hanging wall side*
0	
Dip (deg)	
90	
Z_{TOR} (km)	*If unknown use 999*
999	
Z_{HYP} (km)	*If unknown use 999*
7.48	
$Z_{1.0}$ (km)	*If unknown use 999*
999	
$Z_{2.5}$ (km)	*If unknown use 999*
999	
W (km)	*If unknown use 999*
11.52	
Vs30Flag	
measured	*Choose options for V_{s30} from the list*
F_{AS}	
no	*Aftershock effect is not applicable.*
Region	
California	*Choose region from the list*

Calculated Variables/Flags

ΔDPP	*Always 0 for median calcs.*
0	
PGA_r (g)	
0.347	
Z_{BOT} (km) (CB14)	*Enter for default W calcs*
15	
SS	
1	*auto calculated*
$V_{s30Flag}$	
1	*measured*
F_{AS}	
0	*Aftershock effect is not applicable.*
Region	
0	*California*
Option for Sa value	
1	*Weighted average of the natural logarithm of the spectral values*

RotD50 Horizontal Component of PGA, PGV and *IMs*

		Baseline: 5% Damping				User defined: 5% Damping			
GMP	*T* (s)	PSa Median for 5% damping	PSa Median + 1.σ for 5% damping	PSa Median - 1.σ for 5% damping	S_d Median for 5% damping	PSa Median for 5% damping	PSa Median + 1.σ for 5 % damping	PSa Median - 1.σ for 5 % damping	Sd Median for 5 % damping
	0.01	0.4113299	0.6807387	0.248542	0.001021	0.41133	0.6807387	0.248542	0.001021
	0.02	0.4106372	0.6825476	0.247049	0.004077	0.410637	0.6825476	0.247049	0.004077
	0.03	0.4109585	0.6858812	0.246233	0.009181	0.410548	0.6851953	0.245987	0.009172
	0.05	0.4420571	0.7465188	0.261768	0.027434	0.442057	0.7465188	0.261768	0.027434
	0.075	0.5175297	0.8840625	0.302962	0.072264	0.518565	0.8858306	0.303567	0.072409
	0.1	0.5962087	1.016328	0.349754	0.148001	0.597997	1.019377	0.350803	0.148445
	0.15	0.735682	1.2287286	0.440478	0.410903	0.737153	1.2311861	0.441359	0.411725
	0.2	0.8403639	1.3881876	0.508729	0.834437	0.842045	1.390964	0.509747	0.836106
	0.25	0.9204193	1.5271272	0.554749	1.428013	0.924101	1.5332357	0.556968	1.433725
PSa (g), S_d (cm)	0.3	0.9690804	1.6377524	0.573418	2.165054	0.970049	1.6393901	0.573991	2.167219
	0.4	0.9912308	1.7296257	0.568064	3.936961	0.993213	1.733085	0.5692	3.944835
	0.5	0.9592081	1.7162152	0.53611	5.952771	0.960167	1.7179314	0.536646	5.958724
	0.75	0.7823989	1.4657097	0.417646	10.92489	0.782399	1.4657097	0.417646	10.92489
	1	0.6608729	1.2757199	0.342358	16.4053	0.660212	1.2744442	0.342016	16.3889
	1.5	0.4828805	0.9530981	0.244648	26.97047	0.483363	0.9540512	0.244893	26.99744
	2	0.3740868	0.7465504	0.18745	37.14486	0.373339	0.7450573	0.187075	37.07057
	3	0.2510145	0.5037736	0.125073	56.07997	0.250764	0.5032698	0.124948	56.02389
	4	0.1779982	0.3537962	0.089553	70.69715	0.17782	0.3534424	0.089463	70.62645
	5	0.1293917	0.2577257	0.064961	80.29949	0.129004	0.2569525	0.064766	80.0586
	7.5	0.062502	0.1241545	0.031465	87.27359	0.062377	0.1239062	0.031402	87.09905
	10	0.0354445	0.0697478	0.018012	87.98629	0.035303	0.0694688	0.01794	87.63435
PGA (g)	0	0.4089755	0.6763637	0.247294	0.001015	0.41133	0.6807387	0.248542	0.001021
PGV (cm/s)	-1	68.706356	121.29546	38.91789	0.170555	NA	NA	NA	NA

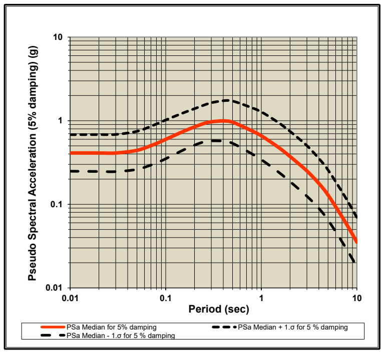

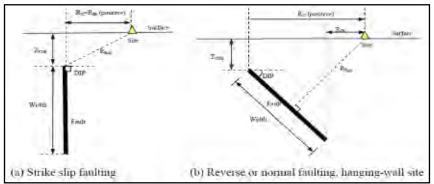

(a) Strike slip faulting

(b) Reverse or normal faulting, hanging-wall site

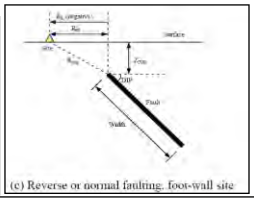

(c) Reverse or normal faulting, foot-wall site

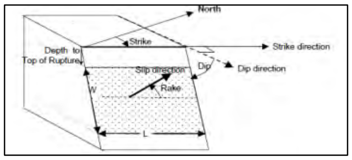

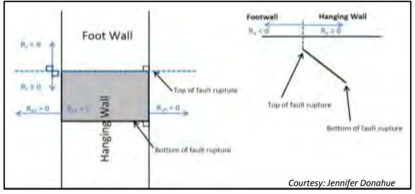

Courtesy: Jennifer Donahue

Definition of Parameters

Damping ratio = Viscous damping ratio (%) See Sanaz et al. (2012) PEER Report
PSA = Pseudo-absolute acceleration response spectrum (g)
PGA = Peak ground acceleration (g)
PGV = Peak ground velocity (cm/s)
S_d = Relative displacement response spectrum (cm)
M_w = Moment magnitude
R_{RUP} = Closest distance to coseismic rupture (km), used in ASK13, CB13 and CY13. See Figures a, b and c for illustation
R_{JB} = Closest distance to surface projection of coseismic rupture (km). See Figures a, b and c for illustation
R_X = Horizontal distance from top of rupture measured perpendicular to fault strike (km). See Figures a, b and c for illustation
R_{y0} = The horizontal distance off the end of the rupture measured parallel to strike (km)
V_{S30} = The average shear-wave velocity (m/s) over a subsurface depth of 30 m
U = Unspecified-mechanism factor: 1 for unspecified; 0 otherwise
F_{RV} = Reverse-faulting factor: 0 for strike slip, normal, normal-oblique; 1 for reverse, reverse-oblique and thrust
F_{NM} = Normal-faulting factor: 0 for strike slip, reverse, reverse-oblique, thrust and normal-oblique; 1 for normal
F_{HW} = Hanging-wall factor: 1 for site on down-dip side of top of rupture; 0 otherwise
Dip = Average dip of rupture plane (degrees)
Z_{TOR} = Depth to top of coseismic rupture (km)
Z_{HYP} = Hypocentral depth from the earthquake
$Z_{1.0}$ = Depth to Vs=1 km/sec
$Z_{2.5}$ = Depth to Vs=2.5 km/sec
W = Fault rupture width (km)
$V_{s30flag}$ = 1 for measured, 0 for inferred Vs30
F_{AS} = 0 for mainshock; 1 for aftershock
Region = Specific regions considered in the models, Click on Region to see codes
ΔDPP = Directivity term, direct point parameter; uses 0 for median predictions
PGA_r (g) = Peak ground acceleration on rock (g), this specific cell is updated in the cell for BSSA14 and CB14, for others it is taken account for in the macros
Z_{BOT} (km) = The depth to the bottom of the seismogenic crust
Z_{BOR} (km) = The depth to the bottom of the rupture plane
SS = 1 for strike slip, automatically updated in the cell

Input variables with defaults (If entered 999 as input):

Red colored value: The value is used in the code when input is unknown

DEFAULTs	USER defined	ASK14	BSSA14	CB14	CY14	I14
W (km)	11.52	▨	▨	15.000	▨	▨
$Z_{1.0}$ (km)	999.000	0.475	▨	▨	0.485	▨
$\delta Z_{1.0}$ (km)	0.000	▨	0.000	▨	▨	▨
$Z_{2.5}$ (V_{S30}=1100)(km)	999.000	▨	▨	0.398	▨	▨
$Z_{2.5}$ (V_{S30})(km)	999.000	▨	▨	2.070	▨	▨
Z_{hyp} (km)	7.48	▨	▨	10.227	▨	▨
Z_{tor} (km)	999.00	▨	▨	0.000	0.000	▨
Z_{BOR} (km)	-	▨	▨	15.000	▨	▨

ACKNOWLEDGEMENTS

Nick Gregor, Bechtel
Silvia Mazzoni, Consultant

All NGA West-2 participants are acknowledged for their constructive comments and feedback.

WEIGHTED AVERAGE of 2014 NGA WEST-2 GMPEs

Last updated: 04 14 15

by Emel Seyhan, PhD, PEER & UCLA -- email: emel.seyhan@gmail.com, peer_center@berkeley.edu

San Jacinto (San Jacinto Valley) fault

This excel file will be updated as necessary on the PEER website to fix any typos or other errors. Please check the website frequently for new versions at: http://peer.berkeley.edu/ngawest2/databases/

Legend	Pre-defined option	Main input variable	Calculated variable	Input var. flag	Internal variable

GMPE averaging	Geometric	*Weighted average of the natural logarithm of the spectral values*

GMPEs	ASK14	BSSA14	CB14	CY14	I14
Weight	0.25	0.25	0.25	0.25	0

# of std. dev.	1	
Damping ratio (%)	5	*Modification factors are calculated in Sheet DSF*

ASK14	Abrahamson & Silva & Kamai 2014 NGA West-2 Model
BSSA14	Boore & Stewart & Seyhan & Atkinson 2014 NGA West-2 Model
CB14	Campbell & Bozorgnia 2014 NGA West-2 Model
CY14	Chiou & Youngs 2014 NGA West-2 Model
I14	Idriss 2014 NGA West-2 Model

Input variables	Value	Errors and warnings
M_w	8.01	
R_{RUP} (km)	9.81	
R_{JB} (km)	9.81	
R_X (km)	9.81	
Ry0 (km)	999	*If unknown use 999*
V_{S30} (m/sec)	260	
U (BSSA13)	1	*1: Unspecified fault mech.*
F_{RV}	0	*1: reverse fault*
F_{NM}	0	*1: normal fault*
F_{HW}	0	*1: hanging wall side*
Dip (deg)	90	
Z_{TOR} (km)	999	*If unknown use 999*
Z_{HYP} (km)	10.27	*If unknown use 999*
$Z_{1.0}$ (km)	999	*If unknown use 999*
$Z_{2.5}$ (km)	999	*If unknown use 999*
W (km)	15.81	*If unknown use 999*
Vs30Flag	measured	*Choose options for V_{s30} from the list*
F_{AS}	no	*Aftershock effect is not applicable.*
Region	California	*Choose region from the list*

Calculated Variables/Flags

ΔDPP	0	*Always 0 for median calcs.*
PGA_r (g)	0.318	
Z_{BOT} (km) (CB14)	15	*Enter for default W calcs*
SS	1	*auto calculated*
$V_{s30Flag}$	1	*measured*
F_{AS}	0	*Aftershock effect is not applicable.*
Region	0	*California*
Option for Sa value	1	*Weighted average of the natural logarithm of the spectral values*

RotD50 Horizontal Component of PGA, PGV and *IMs*

GMP	T (s)	Baseline: 5% Damping				User defined: 5% Damping			
		PSa Median for 5% damping	PSa Median + 1.σ for 5% damping	PSa Median - 1.σ for 5% damping	S_d Median for 5% damping	PSa Median for 5% damping	PSa Median + 1.σ for 5 % damping	PSa Median - 1.σ for 5 % damping	Sd Median for 5 % damping
PSa (g), S_d (cm)	0.01	0.3835155	0.6366977	0.231011	0.000952	0.383515	0.6366977	0.231011	0.000952
	0.02	0.3813894	0.6359577	0.228723	0.003787	0.381389	0.6359577	0.228723	0.003787
	0.03	0.3809259	0.6378317	0.227497	0.00851	0.380545	0.6371939	0.227269	0.008502
	0.05	0.4063868	0.6883907	0.239908	0.02522	0.406387	0.6883907	0.239908	0.02522
	0.075	0.4756873	0.8148786	0.277684	0.066422	0.477114	0.8173232	0.278517	0.066621
	0.1	0.5492158	0.9389254	0.321259	0.136336	0.550863	0.9417422	0.322223	0.136745
	0.15	0.6806703	1.1405579	0.406215	0.380177	0.682712	1.1439796	0.407434	0.381317
	0.2	0.7829452	1.297868	0.472315	0.777424	0.784511	1.3004638	0.47326	0.778978
	0.25	0.8592518	1.4306566	0.516066	1.333113	0.86183	1.4349486	0.517615	1.337112
	0.3	0.9100874	1.543215	0.53671	2.033255	0.911908	1.5463014	0.537784	2.037322
	0.4	0.9345762	1.6349049	0.534241	3.711941	0.936445	1.6381747	0.535309	3.719365
	0.5	0.9116648	1.6344062	0.508523	5.657721	0.912576	1.6360407	0.509031	5.663379
	0.75	0.7493947	1.4054866	0.399571	10.46404	0.749395	1.4054866	0.399571	10.46404
	1	0.6401862	1.2366468	0.331411	15.89178	0.639546	1.2354102	0.33108	15.87589
	1.5	0.4887143	0.964879	0.247535	27.29631	0.489203	0.9658439	0.247783	27.32361
	2	0.3883103	0.7749882	0.194564	38.55717	0.387534	0.7734382	0.194175	38.48006
	3	0.2755349	0.5529874	0.13729	61.55814	0.275259	0.5524344	0.137152	61.49658
	4	0.205369	0.4081994	0.103323	81.56825	0.205164	0.4077912	0.10322	81.48668
	5	0.1553114	0.3093533	0.077974	96.38508	0.155001	0.3087346	0.077818	96.19231
	7.5	0.0819255	0.1627376	0.041243	114.3953	0.081598	0.1620866	0.041078	113.9377
	10	0.0473547	0.0931848	0.024065	117.5518	0.047165	0.092812	0.023968	117.0816
PGA (g)	0	0.3813813	0.632705	0.229889	0.000947	0.383515	0.6366977	0.231011	0.000952
PGV (cm/s)	-1	68.879089	121.68825	38.98757	0.170983	NA	NA	NA	NA

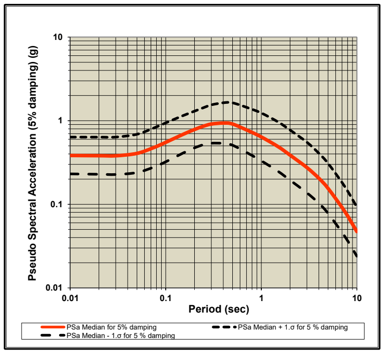

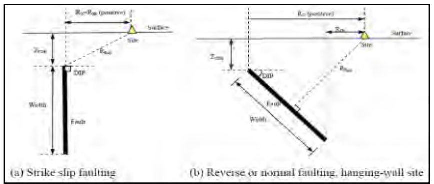

(a) Strike slip faulting

(b) Reverse or normal faulting, hanging-wall site

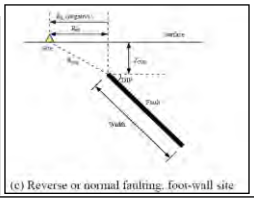

(c) Reverse or normal faulting, foot-wall site

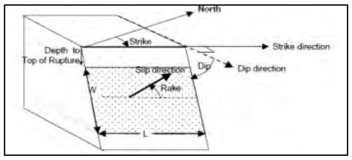

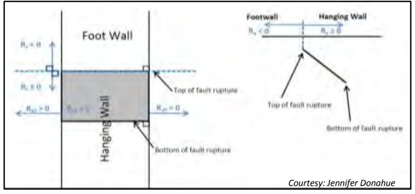

Courtesy: Jennifer Donahue

Definition of Parameters

Damping ratio = Viscous damping ratio (%) See Sanaz et al. (2012) PEER Report
PSA = Pseudo-absolute acceleration response spectrum (g)
PGA = Peak ground acceleration (g)
PGV = Peak ground velocity (cm/s)
S_d = Relative displacement response spectrum (cm)
M_w = Moment magnitude
R_{RUP} = Closest distance to coseismic rupture (km), used in ASK13, CB13 and CY13. See Figures a, b and c for illustation
R_{JB} = Closest distance to surface projection of coseismic rupture (km). See Figures a, b and c for illustation
R_X = Horizontal distance from top of rupture measured perpendicular to fault strike (km). See Figures a, b and c for illustation
R_{y0} = The horizontal distance off the end of the rupture measured parallel to strike (km)
V_{S30} = The average shear-wave velocity (m/s) over a subsurface depth of 30 m
U = Unspecified-mechanism factor: 1 for unspecified; 0 otherwise
F_{RV} = Reverse-faulting factor: 0 for strike slip, normal, normal-oblique; 1 for reverse, reverse-oblique and thrust
F_{NM} = Normal-faulting factor: 0 for strike slip, reverse, reverse-oblique, thrust and normal-oblique; 1 for normal
F_{HW} = Hanging-wall factor: 1 for site on down-dip side of top of rupture; 0 otherwise
Dip = Average dip of rupture plane (degrees)
Z_{TOR} = Depth to top of coseismic rupture (km)
Z_{HYP} = Hypocentral depth from the earthquake
$Z_{1.0}$ = Depth to Vs=1 km/sec
$Z_{2.5}$ = Depth to Vs=2.5 km/sec
W = Fault rupture width (km)
$V_{s30flag}$ = 1 for measured, 0 for inferred Vs30
F_{AS} = 0 for mainshock; 1 for aftershock
Region = Specific regions considered in the models, Click on Region to see codes
ΔDPP = Directivity term, direct point parameter; uses 0 for median predictions
PGA_r **(g)** = Peak ground acceleration on rock (g), this specific cell is updated in the cell for BSSA14 and CB14, for others it is taken account for in the macros
Z_{BOT} **(km)** = The depth to the bottom of the seismogenic crust
Z_{BOR} **(km)** = The depth to the bottom of the rupture plane
SS = 1 for strike slip, automatically updated in the cell

Input variables with defaults (If entered 999 as input):

Red colored value: The value is used in the code when input is unknown

DEFAULTs	USER defined	ASK14	BSSA14	CB14	CY14	I14
W (km)	15.81	▨	▨	15.000	▨	▨
$Z_{1.0}$ (km)	999.000	0.475	▨	▨	0.485	▨
$\delta Z_{1.0}$ (km)	0.000	▨	0.000	▨	▨	▨
$Z_{2.5}$ (V_{S30}=1100)(km)	999.000	▨	▨	0.398	▨	▨
$Z_{2.5}$ (V_{S30})(km)	999.000	▨	▨	2.070	▨	▨
Z_{hyp} (km)	10.27	▨	▨	10.227	▨	▨
Z_{tor} (km)	999.00	▨	▨	0.000	0.000	▨
Z_{BOR} (km)	-	▨	▨	15.000	▨	▨

ACKNOWLEDGEMENTS

Nick Gregor, Bechtel
Silvia Mazzoni, Consultant

All NGA West-2 participants are acknowledged for their constructive comments and feedback.

E. Colton Avenue and N. Wabash Avenue, Redlands

Latitude, Longitude: 34.0638, -117.1400

Date	3/22/2022, 12:45:04 PM
Design Code Reference Document	ASCE7-16
Risk Category	III
Site Class	D - Stiff Soil

Type	Value	Description
S_S	1.914	MCE_R ground motion. (for 0.2 second period)
S_1	0.789	MCE_R ground motion. (for 1.0s period)
S_{MS}	1.914	Site-modified spectral acceleration value
S_{M1}	null -See Section 11.4.8	Site-modified spectral acceleration value
S_{DS}	1.276	Numeric seismic design value at 0.2 second SA
S_{D1}	null -See Section 11.4.8	Numeric seismic design value at 1.0 second SA

Type	Value	Description
SDC	null -See Section 11.4.8	Seismic design category
F_a	1	Site amplification factor at 0.2 second
F_v	null -See Section 11.4.8	Site amplification factor at 1.0 second
PGA	0.819	MCE_G peak ground acceleration
F_{PGA}	1.1	Site amplification factor at PGA
PGA_M	0.901	Site modified peak ground acceleration
T_L	8	Long-period transition period in seconds
SsRT	2.587	Probabilistic risk-targeted ground motion. (0.2 second)
SsUH	2.831	Factored uniform-hazard (2% probability of exceedance in 50 years) spectral acceleration
SsD	1.914	Factored deterministic acceleration value. (0.2 second)
S1RT	1.018	Probabilistic risk-targeted ground motion. (1.0 second)
S1UH	1.143	Factored uniform-hazard (2% probability of exceedance in 50 years) spectral acceleration.
S1D	0.789	Factored deterministic acceleration value. (1.0 second)
PGAd	0.819	Factored deterministic acceleration value. (Peak Ground Acceleration)
C_{RS}	0.914	Mapped value of the risk coefficient at short periods
C_{R1}	0.891	Mapped value of the risk coefficient at a period of 1 s

DISCLAIMER

While the information presented on this website is believed to be correct, SEAOC /OSHPD and its sponsors and contributors assume no responsibility or liability for its accuracy. The material presented in this web application should not be used or relied upon for any specific application without competent examination and verification of its accuracy, suitability and applicability by engineers or other licensed professionals. SEAOC / OSHPD do not intend that the use of this information replace the sound judgment of such competent professionals, having experience and knowledge in the field of practice, nor to substitute for the standard of care required of such professionals in interpreting and applying the results of the seismic data provided by this website. Users of the information from this website assume all liability arising from such use. Use of the output of this website does not imply approval by the governing building code bodies responsible for building code approval and interpretation for the building site described by latitude/longitude location in the search results of this website.

U.S. Geological Survey - Earthquake Hazards Program

Unified Hazard Tool

Please do not use this tool to obtain ground motion parameter values for the design code reference documents covered by the U.S. Seismic Design Maps web tools (e.g., the International Building Code and the ASCE 7 or 41 Standard). The values returned by the two applications are not identical.

^ Input

Edition

Dynamic: Conterminous U.S. 2014 (upd…

Spectral Period

Peak Ground Acceleration

Latitude

Decimal degrees

34.0638

Time Horizon

Return period in years

2475

Longitude

Decimal degrees, negative values for western longitudes

-117.14

Site Class

259 m/s (Site class D)

Hazard Curve

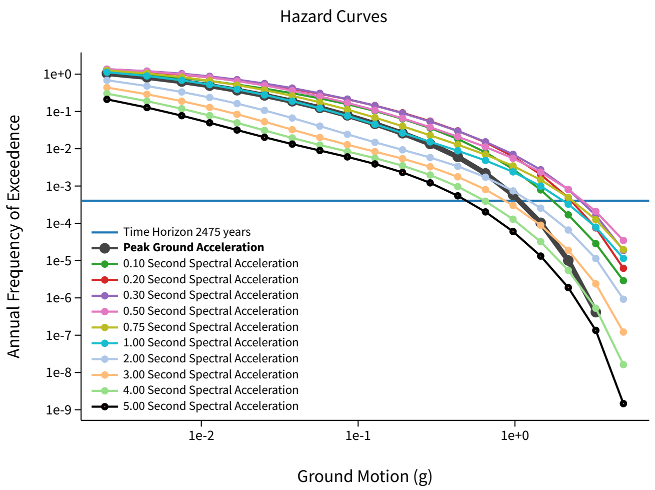
Hazard Curves

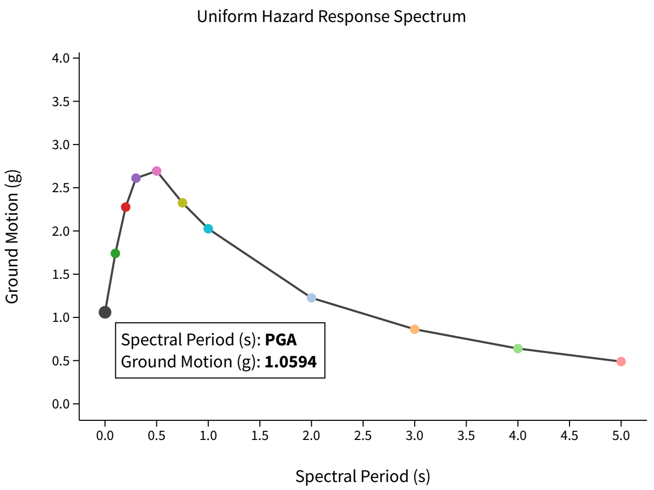
Uniform Hazard Response Spectrum

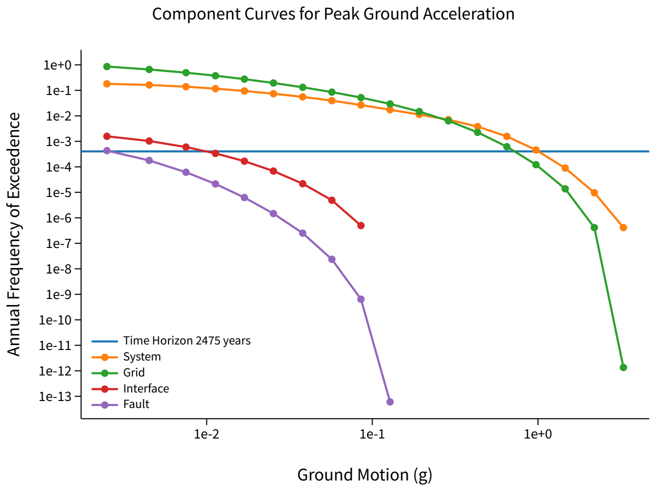
Component Curves for Peak Ground Acceleration

View Raw Data

Deaggregation

Component

Total

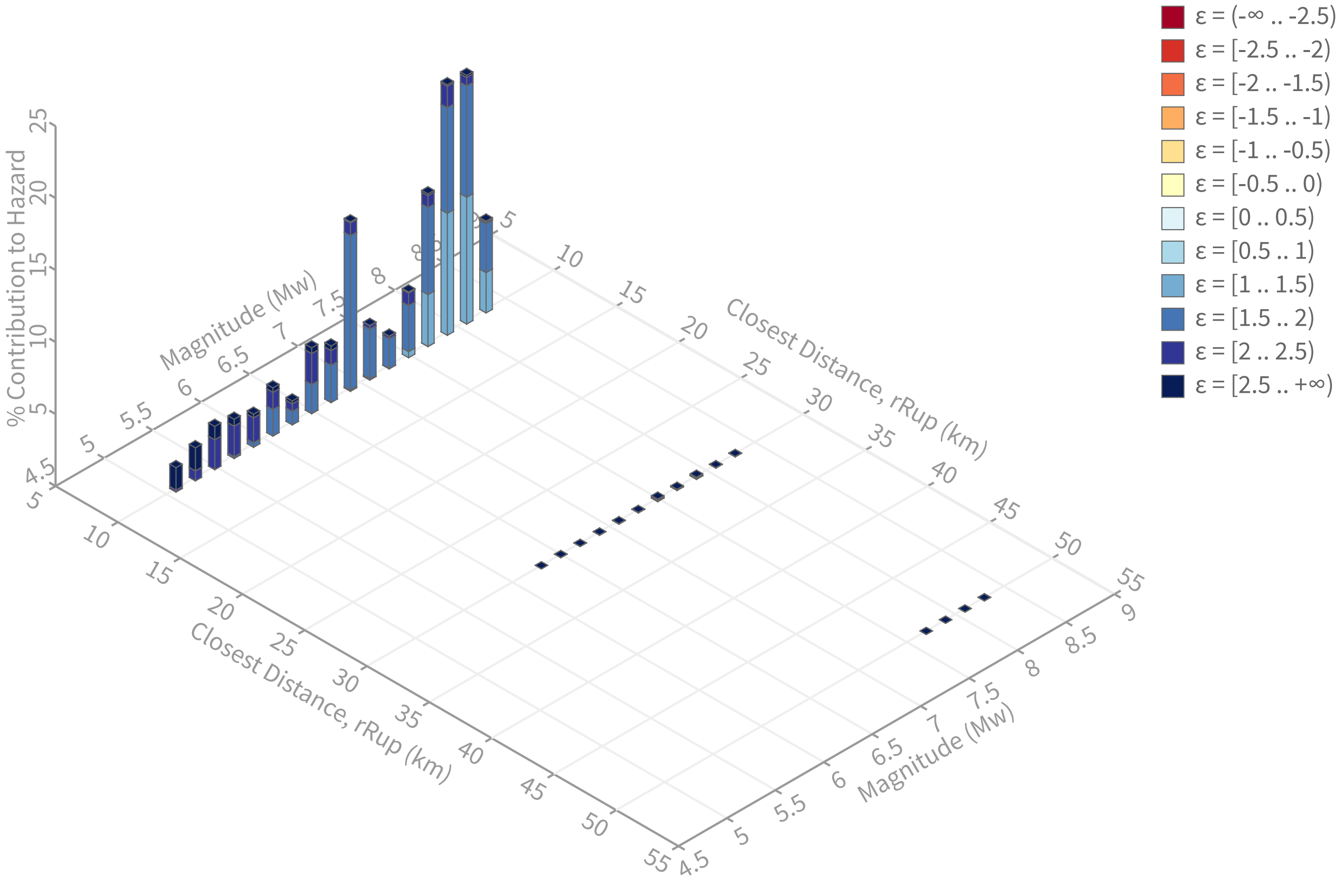

Summary statistics for, Deaggregation: Total

Deaggregation targets

Return period: 2475 yrs
Exceedance rate: 0.0004040404 yr^{-1}
PGA ground motion: 1.0593831 g

Recovered targets

Return period: 3321.3976 yrs
Exceedance rate: 0.00030107808 yr^{-1}

Totals

Binned: 100 %
Residual: 0 %
Trace: 0.03 %

Mean (over all sources)

m: 7.27
r: 7.32 km
$ε_0$: 1.8 σ

Mode (largest m-r bin)

m: 7.91
r: 7.19 km
$ε_0$: 1.6 σ
Contribution: 17.39 %

Mode (largest m-r-$ε_0$ bin)

m: 6.84
r: 5.81 km
$ε_0$: 1.81 σ
Contribution: 10.71 %

Discretization

r: min = 0.0, max = 1000.0, Δ = 20.0 km
m: min = 4.4, max = 9.4, Δ = 0.2
ε: min = -3.0, max = 3.0, Δ = 0.5 σ

Epsilon keys

ε0: [-∞ .. -2.5)
ε1: [-2.5 .. -2.0)
ε2: [-2.0 .. -1.5)
ε3: [-1.5 .. -1.0)
ε4: [-1.0 .. -0.5)
ε5: [-0.5 .. 0.0)
ε6: [0.0 .. 0.5)
ε7: [0.5 .. 1.0)
ε8: [1.0 .. 1.5)
ε9: [1.5 .. 2.0)
ε10: [2.0 .. 2.5)
ε11: [2.5 .. +∞]

Deaggregation Contributors

Source Set ↳ Source	Type	r	m	ε_0	lon	lat	az	%
UC33brAvg_FM31	System							41.52
San Andreas (San Bernardino S) [1]		5.81	7.46	1.67	117.117°W	34.111°N	22.38	26.23
San Jacinto (San Jacinto Valley) rev [0]		9.81	8.02	1.78	117.215°W	34.002°N	225.08	7.41
San Andreas (North Branch Mill Creek) [1]		7.08	7.94	1.40	117.111°W	34.123°N	21.83	3.54
San Andreas (San Bernardino S) [2]		6.03	6.79	1.89	117.099°W	34.104°N	39.89	1.39
UC33brAvg_FM32	System							41.39
San Andreas (San Bernardino S) [1]		5.81	7.47	1.66	117.117°W	34.111°N	22.38	26.35
San Jacinto (San Jacinto Valley) rev [0]		9.81	8.01	1.78	117.215°W	34.002°N	225.08	7.39
San Andreas (North Branch Mill Creek) [1]		7.08	7.95	1.40	117.111°W	34.123°N	21.83	3.64
San Andreas (San Bernardino S) [2]		6.03	6.81	1.88	117.099°W	34.104°N	39.89	1.23
UC33brAvg_FM31 (opt)	Grid							8.54
PointSourceFinite: -117.140, 34.122		8.07	5.70	2.26	117.140°W	34.122°N	0.00	1.70
PointSourceFinite: -117.140, 34.122		8.07	5.70	2.26	117.140°W	34.122°N	0.00	1.70
PointSourceFinite: -117.140, 34.113		7.45	5.65	2.20	117.140°W	34.113°N	0.00	1.32
PointSourceFinite: -117.140, 34.113		7.45	5.65	2.20	117.140°W	34.113°N	0.00	1.32
UC33brAvg_FM32 (opt)	Grid							8.54
PointSourceFinite: -117.140, 34.122		8.07	5.70	2.26	117.140°W	34.122°N	0.00	1.70
PointSourceFinite: -117.140, 34.122		8.07	5.70	2.26	117.140°W	34.122°N	0.00	1.70
PointSourceFinite: -117.140, 34.113		7.45	5.65	2.20	117.140°W	34.113°N	0.00	1.32
PointSourceFinite: -117.140, 34.113		7.45	5.65	2.20	117.140°W	34.113°N	0.00	1.32

APPENDIX E
STANDARD GRADING GUIDELINES

STANDARD GRADING SPECIFICATIONS

These specifications present the usual and minimum requirements for grading operations performed under the observation and testing of TGR Geotechnical, Inc.

No deviation from these specifications will be allowed, except where specifically superseded in the Preliminary Geotechnical Investigation report, or in other written communication signed by the Soils Engineer or Engineering Geologist.

1.0 GENERAL

- The Soils Engineer and Engineering Geologist are the Owner's or Builder's representatives on the project. For the purpose of these specifications, observation and testing by the Soils Engineer includes that observation and testing performed by any person or persons employed by, and responsible to, the licensed Geotechnical Engineer or Geologist signing the grading report.

- All clearing, site preparation or earthwork performed on the project shall be conducted by the Contractor under the observation of the Geotechnical Engineer.

- It is the Contractor's responsibility to prepare the ground surface to receive the fills to the satisfaction of the Geotechnical Engineer and to place, spread, mix, water and compact the fill in accordance with the specifications of the Geotechnical Engineer. The Contractor shall also remove all material considered unsatisfactory by the Geotechnical Engineer.

- It is also the Contractor's responsibility to have suitable and sufficient compaction equipment on the job site to handle the amount of fill being placed. If necessary, excavation equipment will be shut down to permit completion of Compaction. Sufficient watering apparatus will also be provided by the Contractor, with due consideration for the fill material, rate of placement and time of year.

- A final report will be issued by the Geotechnical Engineer and Engineering Geologist attesting to the Contractor's conformance with these specifications.

2.0 SITE PREPARATION

- All vegetation and deleterious material such as rubbish shall be disposed of off-site. The removal must be concluded prior to placing fill.

- The Civil Engineer shall locate all houses, sheds, sewage disposal systems, large trees or structures on the site, or on the grading plan to the best of his knowledge prior to preparing the ground surface.

- Soil, alluvium or rock materials determined by the Geotechnical Engineer as being unsuitable for placement in compacted fills shall be removed and wasted from the site. Any material incorporated as part of a compacted fill must be approved by the Geotechnical Engineer.

- After the ground surface to receive fill has been cleared, it shall be scarified, disced or bladed by the Contractor until it is uniform and free from ruts, hollows, hummocks or other uneven features which may prevent uniform compaction.

  The scarified ground surface shall then be brought to optimum moisture content, mixed as required, and compacted as specified. If the scarified zone is greater than twelve inches in depth, the excess shall be removed and placed in lifts restricted to six inches. Prior to placing fill, the ground surface to receive fill shall be inspected, tested and approved by the Geotechnical Engineer.

- Any underground structures such as cesspools, cisterns, mining shafts, tunnels, septic tanks, wells, pipe lines or others not located prior to grading are to be removed or treated in a manner prescribed by the Geotechnical Engineer.

3.0 COMPACTED FILLS

- Any material imported or excavated on the property may be utilized in the fill, provided each material has been determined to be suitable by the Geotechnical Engineer. Roots, tree branches and other matter missed during clearing shall be removed from the fill as directed by the Geotechnical Engineer.
- Rock fragments less than six inches in diameter may be utilized in the fill, provided:

  - They are not placed in concentrated pockets.
  - There is a sufficient percentage of fine-grained material to surround the rocks.
  - The distribution of the rocks is observed by the Geotechnical Engineer.

- Rocks greater than six inches in diameter shall be taken off-site, or placed in accordance with the recommendations of the Geotechnical Engineer in areas designated as suitable for rock disposal. Details for rock disposal such as location, moisture control, percentage of the rock placed, etc., will be referred to in the "Conclusions and Recommendations" section of the Geotechnical Report, if applicable.

  If rocks greater than six inches in diameter were not anticipated in the Preliminary Geotechnical report, rock disposal recommendations may not have been made in the "Conclusions and Recommendations" section. In this case, the Contractor shall notify the Geotechnical Engineer if rocks greater than six inches in diameter are encountered. The Geotechnical Engineer will then prepare a rock disposal recommendation or request that such rocks be taken off-site.

- Material that is spongy, subject to decay, or otherwise considered unsuitable shall not be used in the compacted fill.

- Representative samples of materials to be utilized as compacted fill shall be analyzed in the laboratory by the Geotechnical Engineer to determine their physical properties. If any material other than that previously tested is encountered during grading, the appropriate analysis of this material shall be conducted by the Geotechnical Engineer as soon as possible.

- Material used in the compacting process shall be evenly spread, watered or dried, processed and compacted in thin lifts not to exceed six inches in thickness to obtain a uniformly dense layer. The fill shall be placed and compacted on a horizontal plane, unless otherwise approved by the Geotechnical Engineer.

- If the moisture content or relative compaction varies from that required by the Geotechnical Engineer, the Contractor shall rework the fill until it is approved by the Geotechnical Engineer.

- Each layer shall be compacted to 90 percent of the maximum dry density in compliance with the testing method specified by the controlling governmental agency; (in general, ASTM D1557 will be used.)

  If compaction to a lesser percentage is authorized by the controlling governmental agency because of a specific land use of expansive soil conditions, the area to receive fill compacted to less than 90 percent shall either be delineated on the grading plan or appropriate reference made to the area in the grading report.

- All fill shall be keyed and benched through all topsoil, colluvium, alluvium or creep material, into sound bedrock or firm material where the slope receiving fill exceeds a ratio of five horizontal to one vertical, in accordance with the recommendations of the Geotechnical Engineer.

- The key for side hill fills shall be a minimum of 15 feet within bedrock or firm materials, unless otherwise specified in the Preliminary report. (See details)

- Drainage terraces and subdrainage devices shall be constructed in compliance with the ordinances of the controlling governmental agency, or with the recommendation of the Geotechnical Engineer and Engineer Geologist.

- The Contractor will be required to obtain a minimum relative compaction of 90 percent out to the finish slope face of fill slopes, buttresses and stabilization fills. This may be achieved by either overbuilding the slope and cutting back to the compacted core, or by direct compaction of the slope face with suitable equipment, or by any other procedure which produces the required compaction.

The Contractor shall prepare a written detailed description of the method or methods he will employ to obtain the required slope compaction. Such documents shall be submitted to the Geotechnical Engineer for review and comments prior to the start of grading.

If a method other than overbuilding and cutting back to the compacted core is to be employed, slope tests will be made by the Geotechnical Engineer during construction of the slopes to determine if the required compaction is being achieved. Where failing tests occur or other field problems arise, the contractor will be notified by the Geotechnical Engineer.

If the method of achieving the required slope compaction selected by the Contractor fails to produce the necessary results, the Contractor shall rework or rebuild such slopes until the required degree of compaction is obtained, at no additional cost to the Owner or Geotechnical Engineer.

- All fill slopes should be planted or protected from erosion by methods specified in the preliminary report or by means approved by the governing authorities.

- Fill-over-cut slopes shall be properly keyed through topsoil, colluvium or creep material into rock or firm materials; and the transition shall be stripped of all soil prior to placing fill. (See detail)

4.0 CUT SLOPES

- The Engineering Geologist shall inspect all cut slopes excavated in rock, lithified or formation material at vertical intervals not exceeding ten feet.

- If any conditions not anticipated in the preliminary report such as perched water, seepage, lenticular or confined strata of a potentially adverse nature, unfavorably inclined bedding, joints or fault planes are encountered during grading, these conditions shall be analyzed by the Engineering Geologist and Geotechnical Engineer; and recommendations shall be made to treat these problems.

- Cut slopes that face in the same direction as the prevailing drainage shall be protected from slope wash by a non-erosive interceptor swale placed at the top of the slope.

- Unless otherwise specified in the soils and geological report, no cut slopes shall be excavated higher or steeper than that allowed by the ordinances of controlling governmental agencies.

- Drainage terraces shall be constructed in compliance with the ordinances of controlling governmental agencies, or with the recommendations of the Geotechnical Engineer or Engineering Geologist.

5.0 GRADING CONTROL

- Inspection of the fill placement shall be provided by the Geotechnical Engineer during the progress of grading.

- In general, density tests should be made at intervals not exceeding two feet of fill height or every 500 cubic yards of fill placed. This criteria will vary depending on soil conditions and the size of the job. In any event, an adequate number of field density tests shall be made to verify that the required compaction of being achieved.
- Density tests should be made on the surface material to receive fill as required by the Geotechnical Engineer.

- All cleanout, processed ground to receive fill, key excavations, subdrains and rock disposal must be inspected and approved by the Geotechnical Engineer (and often by the governing authorities) prior to placing any fill. It shall be the Contractor’s responsibility to notify the Geotechnical Engineer and governing authorities when such areas are ready for inspection.

6.0 CONSTRUCTION CONSIDERATIONS

- Erosion control measures, when necessary, shall be provided by the Contractor during grading and prior to the completion and construction of permanent drainage controls.

- Upon completion of grading and termination of observations by the Geotechnical Engineer, no further filling or excavating, including that necessary for footings, foundations, large tree wells, retaining walls, or other features shall be performed without the approval of the Geotechnical Engineer or Engineering Geologist.

- Care shall be taken by the Contractor during final grading to preserve any berms, drainage terraces, interceptor swales, or other devices of a permanent nature on or adjacent to the property.

TYPICAL OVEREXCAVATION OF DAYLIGHT LINE

CUT LOT

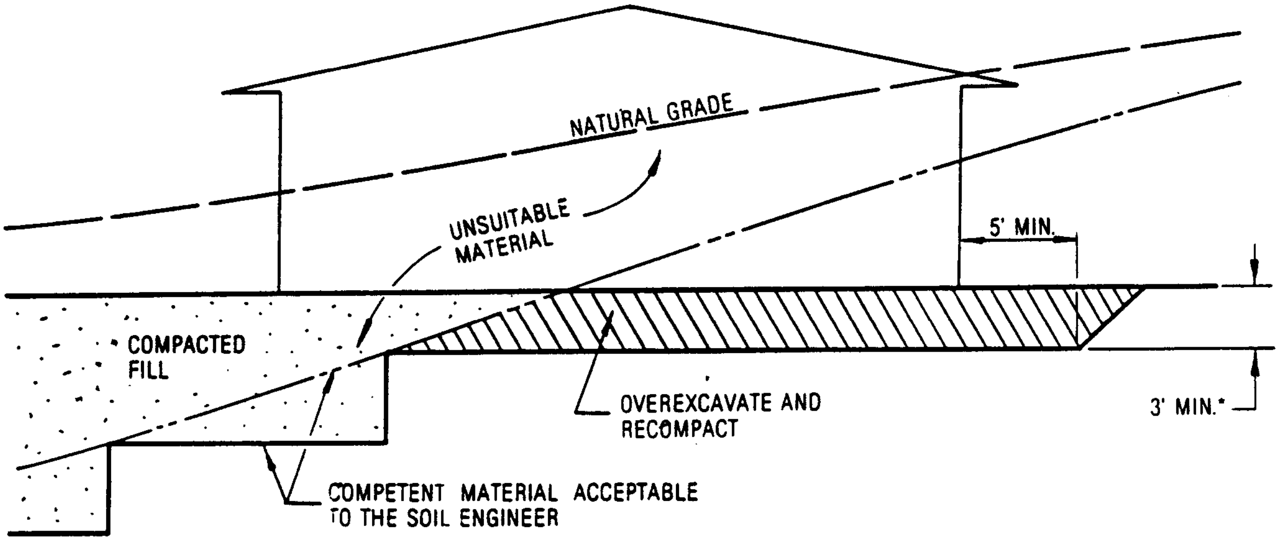

CUT FILL LOT (TRANSITION)

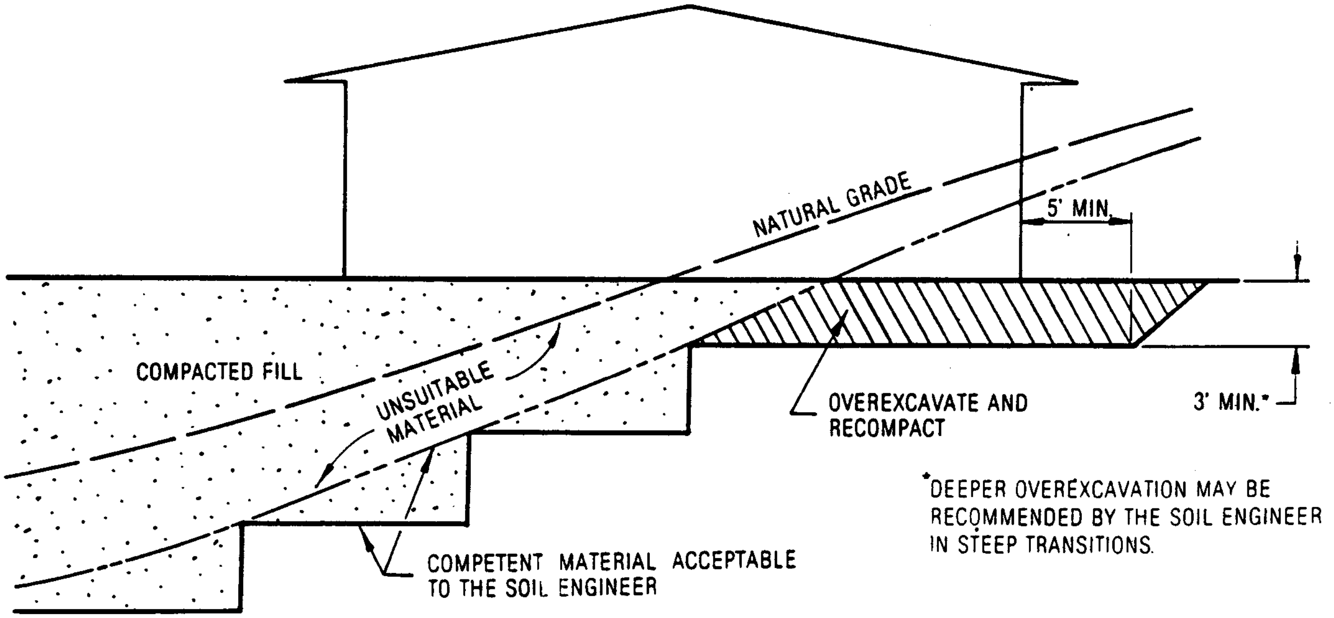

TYPICAL FILL OVER NATURAL SLOPE

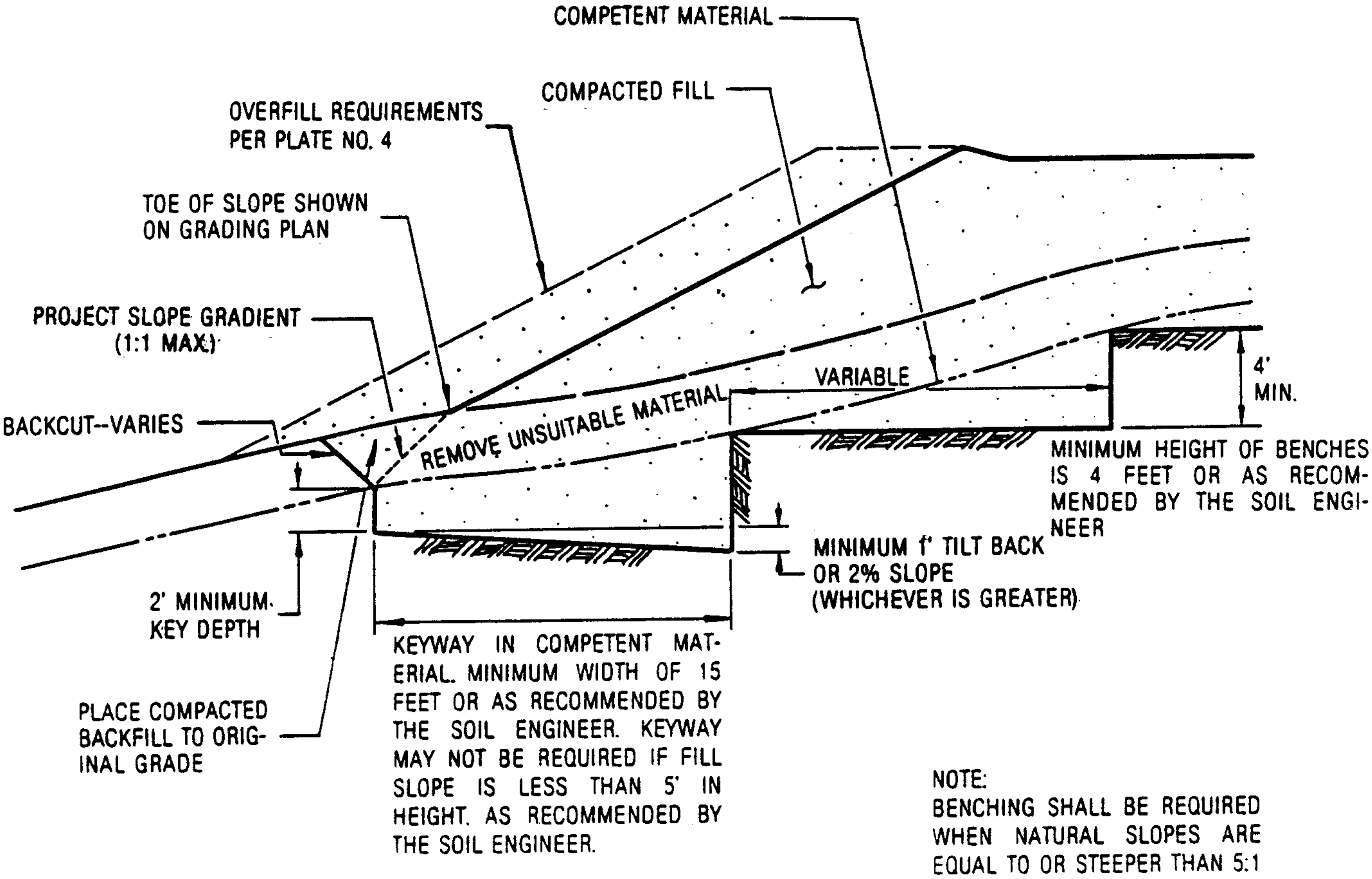

MINIMUM HEIGHT OF BENCHES IS 4 FEET OR AS RECOMMENDED BY THE SOIL ENGINEER

KEYWAY IN COMPETENT MATERIAL. MINIMUM WIDTH OF 15 FEET OR AS RECOMMENDED BY THE SOIL ENGINEER. KEYWAY MAY NOT BE REQUIRED IF FILL SLOPE IS LESS THAN 5' IN HEIGHT. AS RECOMMENDED BY THE SOIL ENGINEER.

NOTE:
BENCHING SHALL BE REQUIRED WHEN NATURAL SLOPES ARE EQUAL TO OR STEEPER THAN 5:1 OR WHEN RECOMMENDED BY THE SOIL ENGINEER.

TYPICAL FILL-OVER-CUT SLOPE

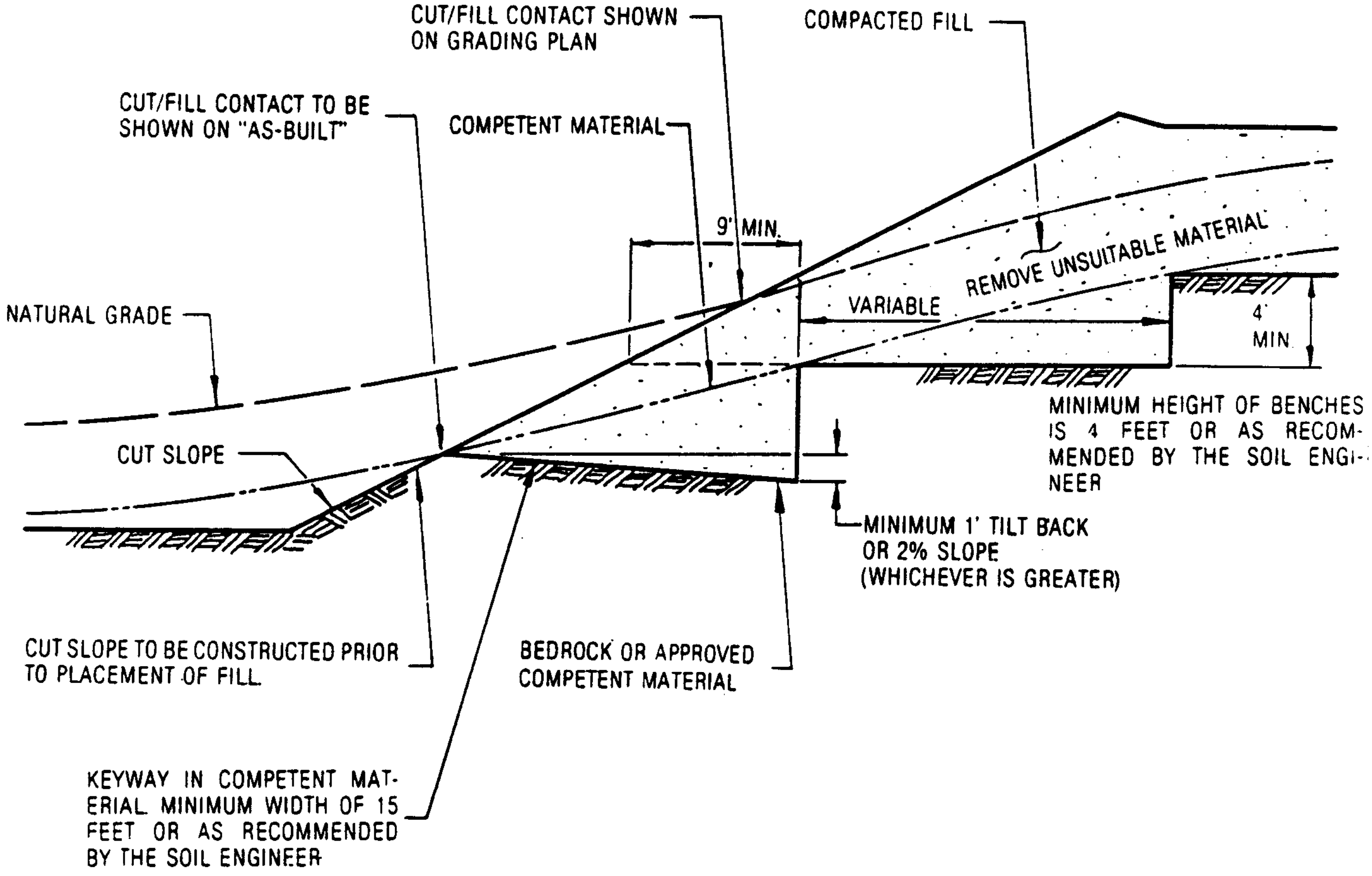

TYPICAL FILL SLOPE CONSTRUCTION

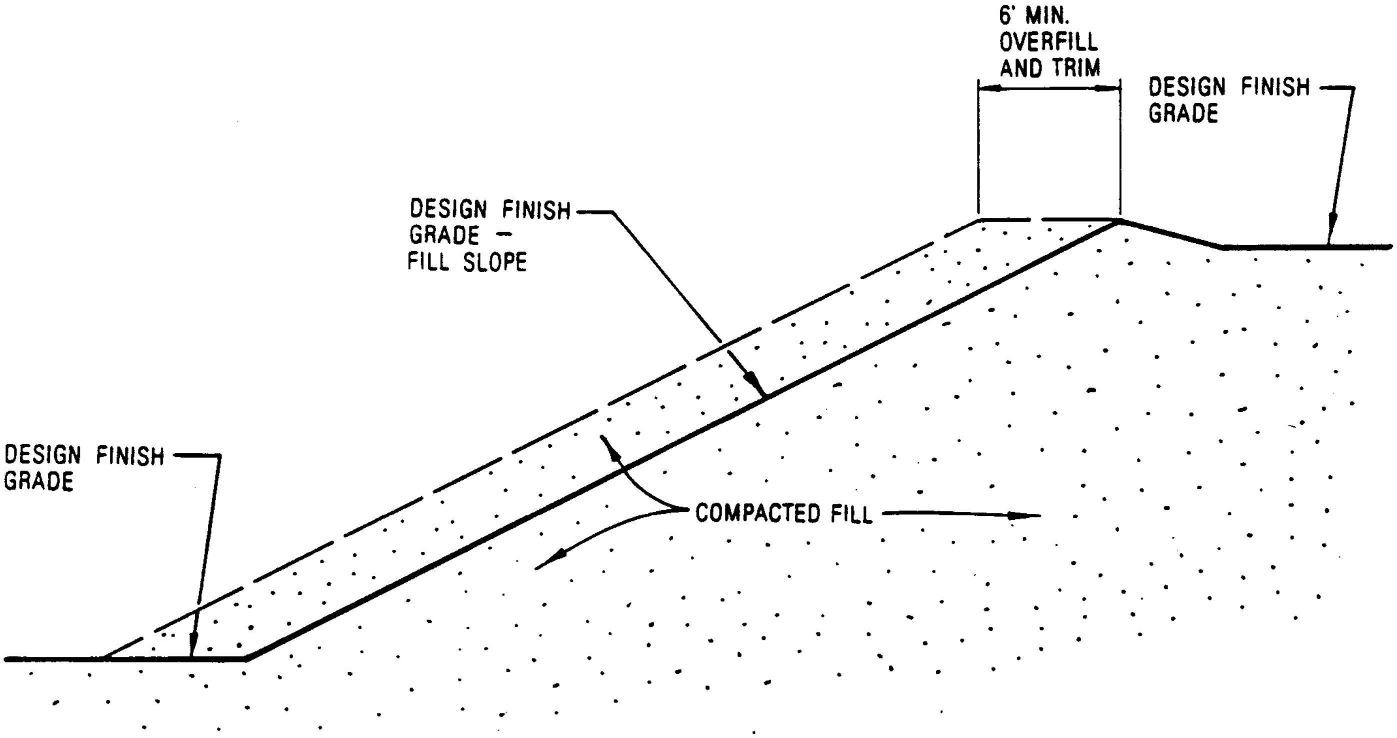

NOTES:

1. ALL FILL SLOPES, INCLUDING BUTTRESS AND STABILIZATION FILLS, SHALL BE OVERFILLED A MINIMUM OF SIX FEET HORIZONTALLY WITH COMPACTED FILL AND TRIMMED TO THE DESIGN FINISH GRADE.

   EXCEPTIONS:
   A. FILL SLOPE OVER CUT SLOPE.
   B. FILL SLOPE ADJACENT TO EXISTING IMPROVEMENTS.
2. THE EXCEPTIONS ABOVE WHICH DO NOT HAVE THE 6 FOOT SLOPE OVERFILL AND TRIM SHALL BE COMPACTED AS STATED IN THE PROJECT SPECIFICATIONS.

TYPICAL STABILIZATION FILL

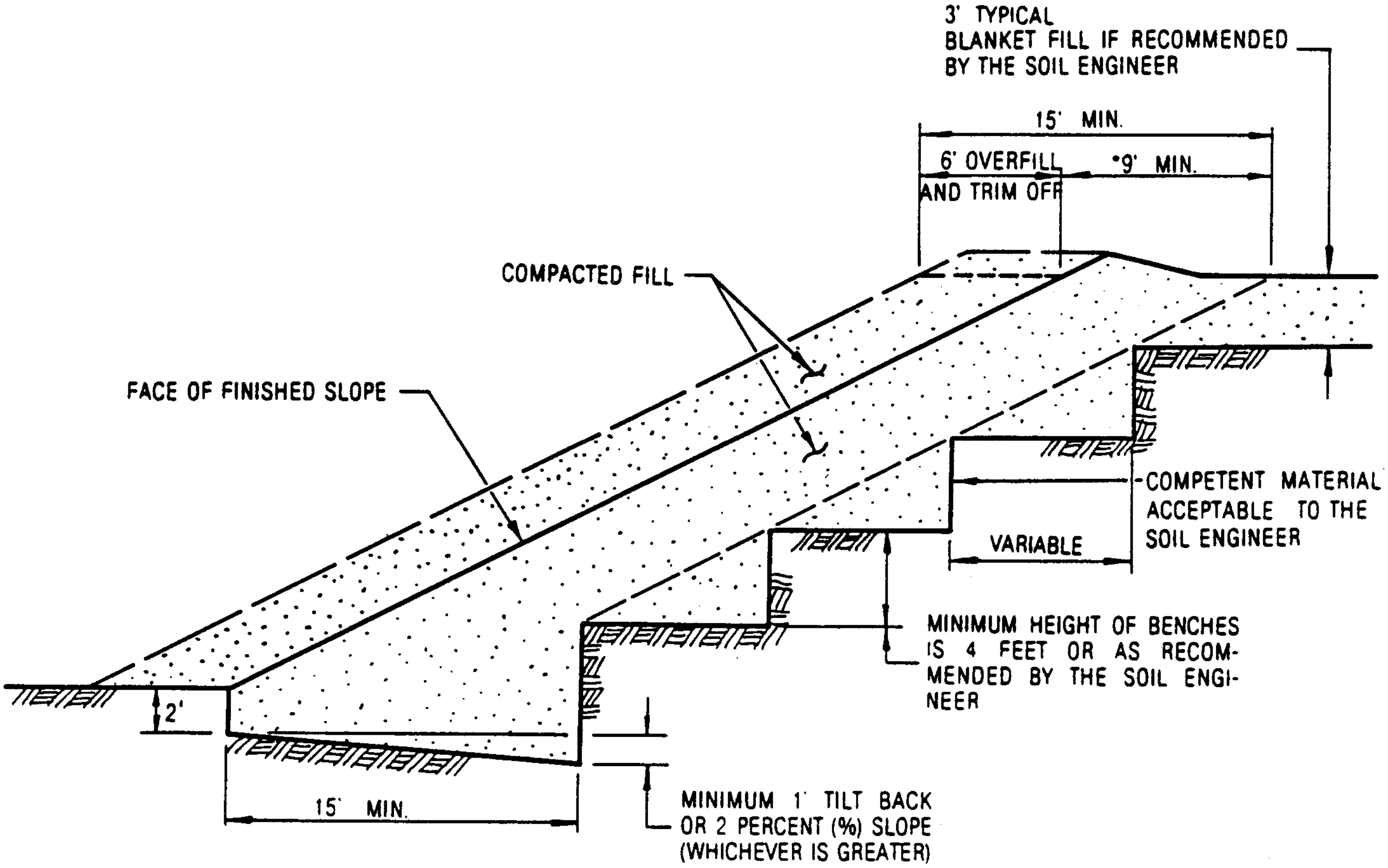

NOTE:
SEE PLATE 6 FOR TYPICAL SUBDRAIN DETAILS FOR STABILIZATION FILLS. IF RECOMMENDED BY THE SOIL ENGINEER.

*GREATER THAN 9' IF RECOMMENDED BY THE SOIL ENGINEER: 15' WHERE NO 6' OVERFILL

TYPICAL CANYON SUBDRAIN

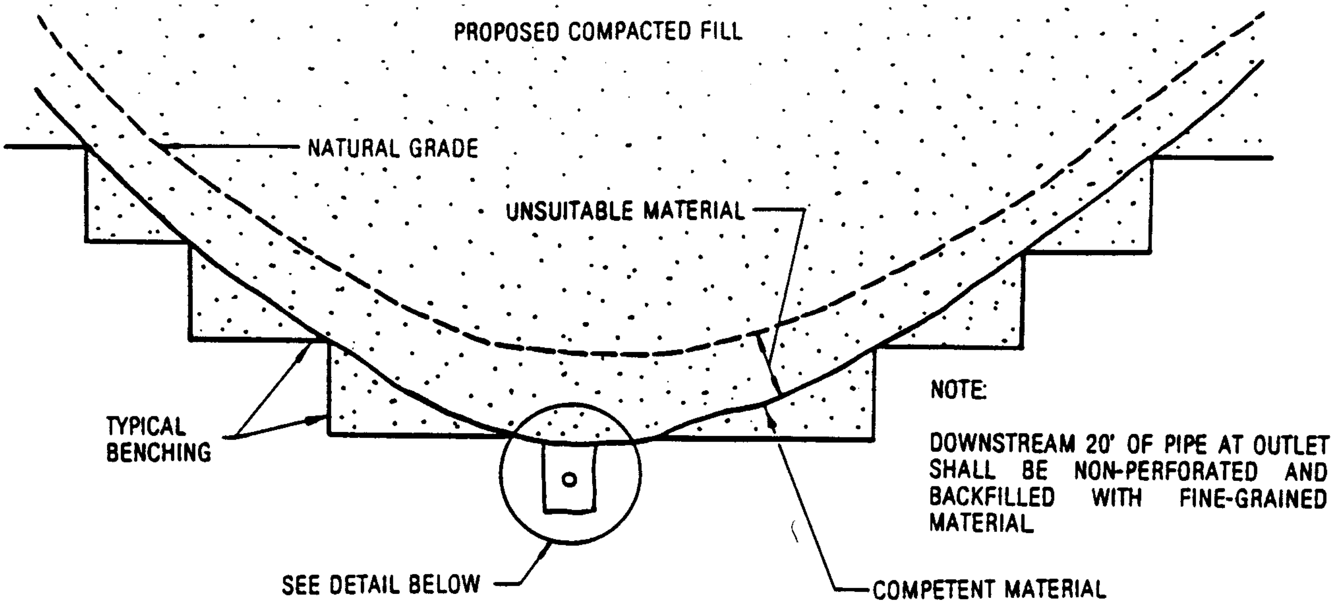

NOTE:

DOWNSTREAM 20' OF PIPE AT OUTLET SHALL BE NON-PERFORATED AND BACKFILLED WITH FINE-GRAINED MATERIAL

NOTES:
PIPE SHALL BE A MINIMUM OF 4 INCHES DIAMETER AND RUNS OF 500 FEET OR MORE USE 6-INCH DIAMETER PIPE, OR AS RECOMMENDED BY THE SOIL ENGINEER

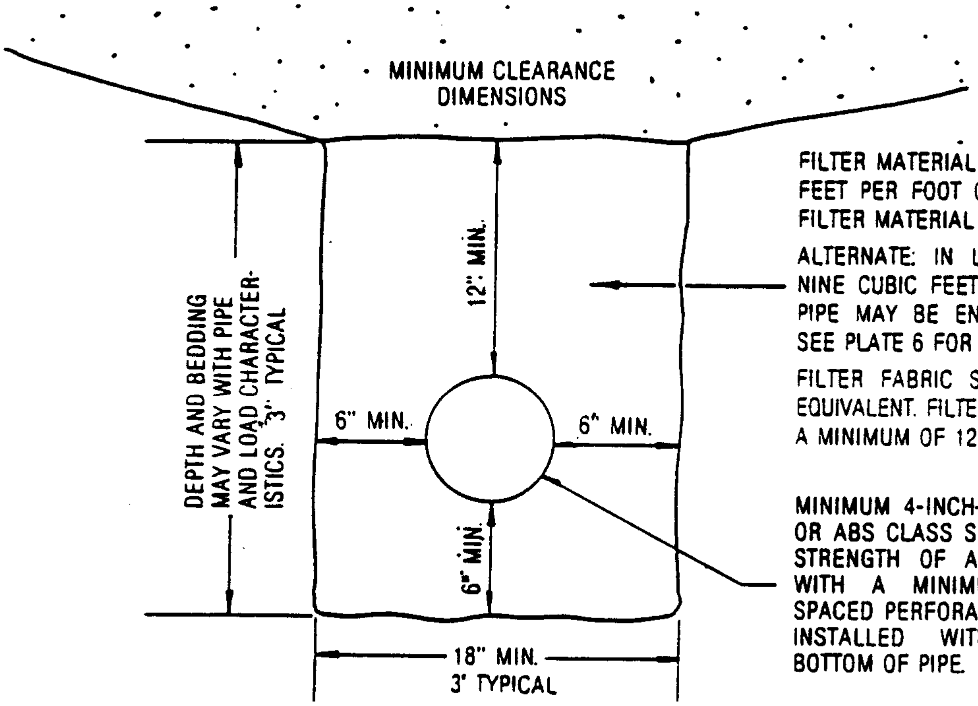

FILTER MATERIAL - MINIMUM OF NINE CUBIC FEET PER FOOT OF PIPE. SEE PLATE 6 FOR FILTER MATERIAL SPECIFICATION.

ALTERNATE: IN LIEU OF FILTER MATERIAL NINE CUBIC FEET OF GRAVEL PER FOOT OF PIPE MAY BE ENCASED IN FILTER FABRIC. SEE PLATE 6 FOR GRAVEL SPECIFICATIONS.

FILTER FABRIC SHALL BE MIRAFI 140 OR EQUIVALENT. FILTER FABRIC SHALL BE LAPPED A MINIMUM OF 12 INCHES ON ALL JOINTS.

MINIMUM 4-INCH-DIAMETER, PVC SCH. 40 OR ABS CLASS SDR-35 WITH A CRUSHING STRENGTH OF AT LEAST 1000 POUNDS, WITH A MINIMUM OF 8 UNIFORMLY SPACED PERFORATIONS PER FOOT OF PIPE, INSTALLED WITH PERFORATIONS ON BOTTOM OF PIPE.

SUBDRAIN OUTLET MARKER

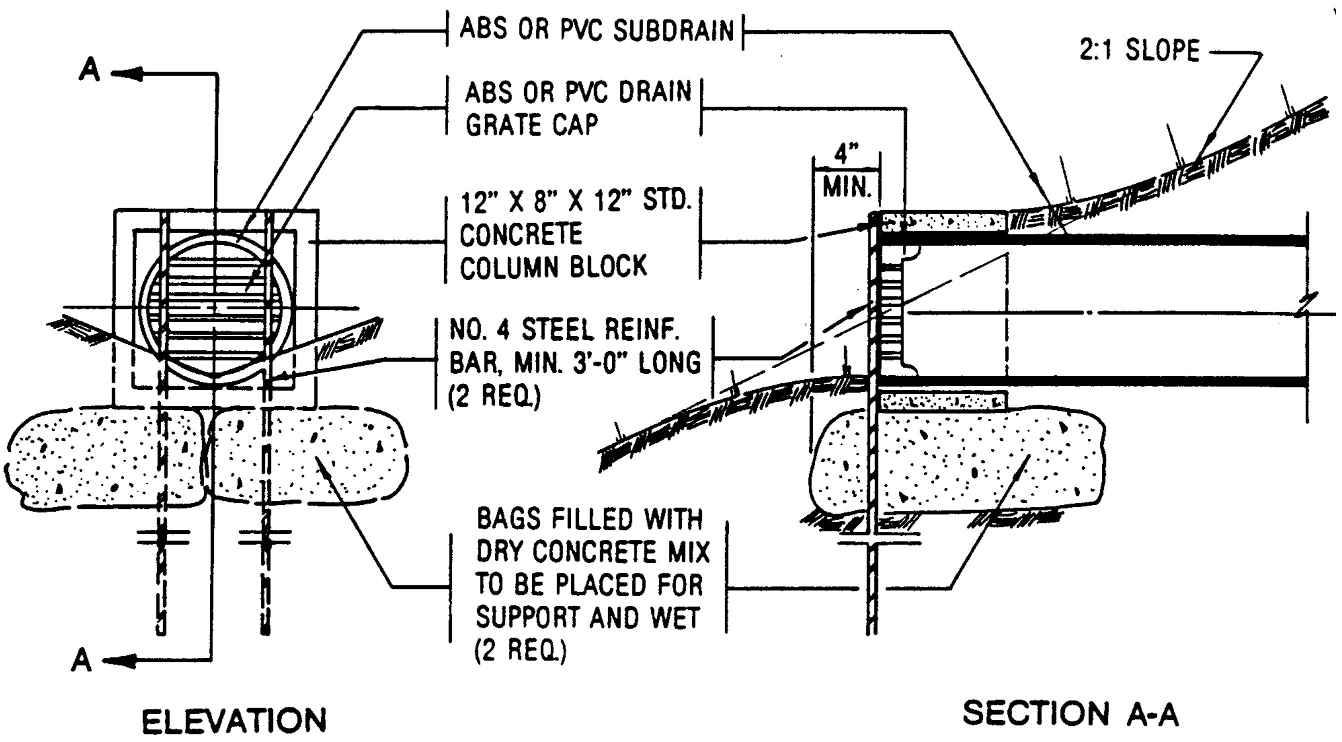

SUBDRAIN OUTLET MARKER FOR 6" AND 8" PIPES

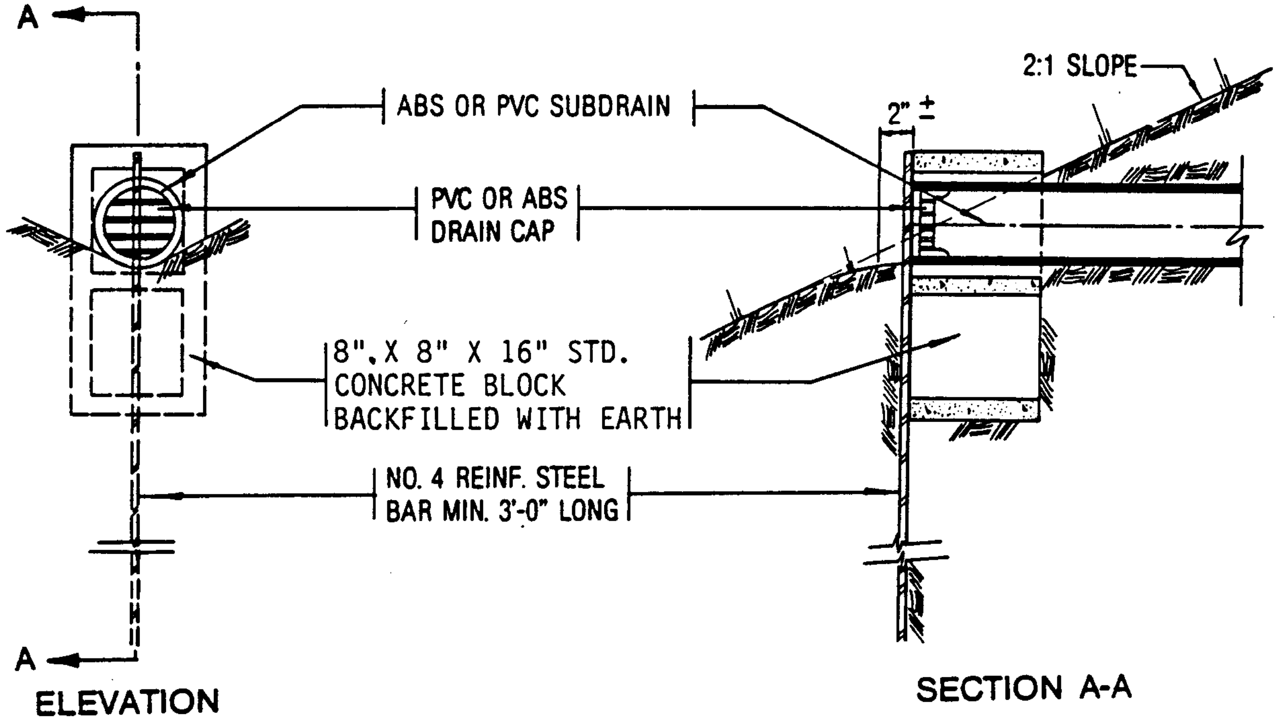

SUBDRAIN OUTLET MARKER – 4" PIPE

TYPICAL STABILIZATION AND BUTTRESS FILL SUBDRAIN

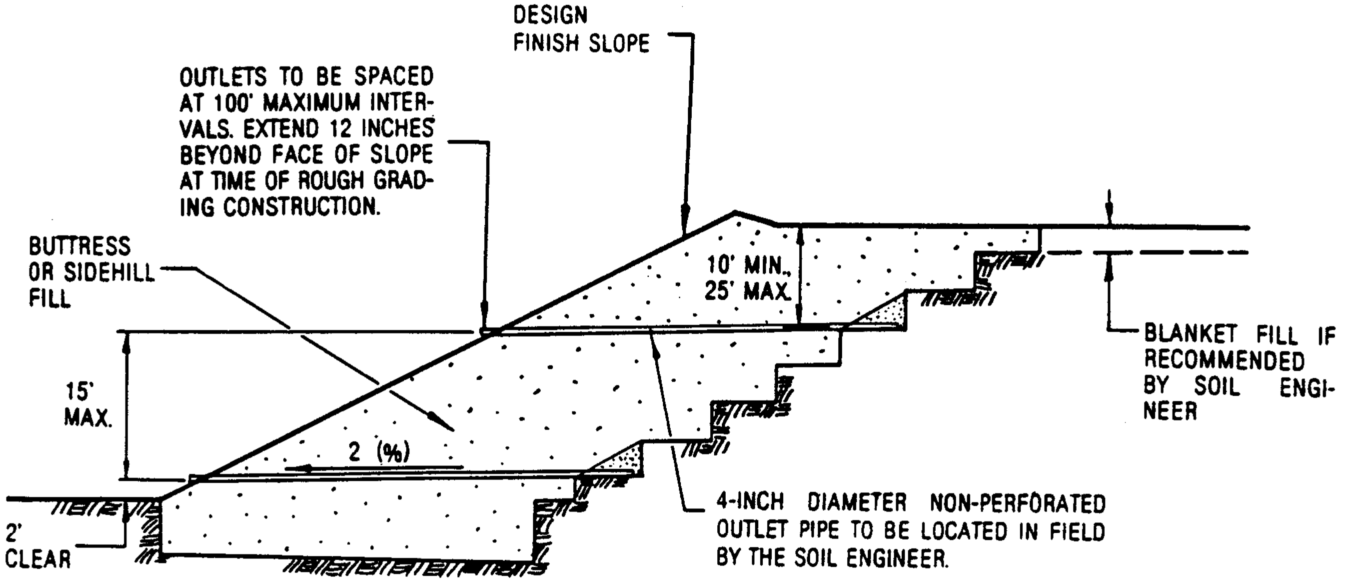

OUTLETS TO BE SPACED AT 100' MAXIMUM INTERVALS. EXTEND 12 INCHES BEYOND FACE OF SLOPE AT TIME OF ROUGH GRADING CONSTRUCTION.

BLANKET FILL IF RECOMMENDED BY SOIL ENGINEER

4-INCH DIAMETER NON-PERFORATED OUTLET PIPE TO BE LOCATED IN FIELD BY THE SOIL ENGINEER.

FILTER MATERIAL" TO MEET FOLLOWING SPECIFI-
:ATION OR APPROVED EQUIVALENT: (CONFORMS TO
:MA STD. PLAN 323)

SIEVE SIZE	PERCENTAGE PASSING
1"	100
3/4"	90-100
3/8"	40-100
NO. 4	25-40
NO. 8	18-33
NO. 30	5-15
NO. 50	0-7
NO. 200	0-3

"GRAVEL" TO MEET FOLLOWING SPECIFICATION OR APPROVED EQUIVALENT:

SIEVE SIZE	MAXIMUM PERCENTAGE PASSING
1½"	100
NO. 4	50
NO. 200	8

SAND EQUIVALENT = MINIMUM OF 50

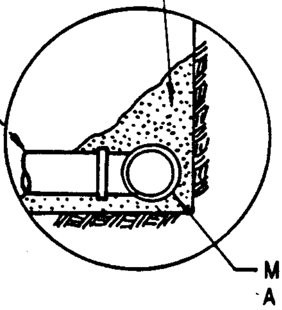

OUTLET PIPE TO BE CONNECTED TO SUBDRAIN PIPE WITH TEE OR ELBOW

FILTER MATERIAL - MINIMUM OF FIVE CUBIC FEET PER FOOT OF PIPE. SEE ABOVE FOR FILTER MATERIAL SPECIFICATION.

ALTERNATIVE: IN LIEU OF FILTER MATERIAL, FIVE CUBIC FEET OF GRAVEL PER FOOT OF PIPE MAY BE ENCASED IN FILTER FABRIC. SEE ABOVE FOR GRAVEL SPECIFICATION.

FILTER FABRIC SHALL BE MIRAFI 140 OR EQUIVALENT. FILTER FABRIC SHALL BE LAPPED A MINIMUM OF 12 INCHES ON ALL JOINTS.

MINIMUM 4-INCH DIAMETER PVC SCH 40 OR ABS CLASS SDR 35 WITH A CRUSHING STRENGTH OF AT LEASE 1,000 POUNDS, WITH A MINIMUM OF 8 UNIFORMLY SPACED PERFORATIONS PER FOOT OF PIPE INSTALLED WITH PERFORATIONS ON BOTTOM OF PIPE. PROVIDE CAP AT UPSTREAM END OF PIPE. SLOPE AT 2 PERCENT TO OUTLET PIPE.

-NOTES:

1. TRENCH FOR OUTLET PIPES TO BE BACKFILLED WITH ON-SITE SOIL.

TYPICAL CUT AND FILL GRADING DETAILS

TYPICAL GRADING WITHIN PROPOSED DEEP BEDROCK CUT AREAS

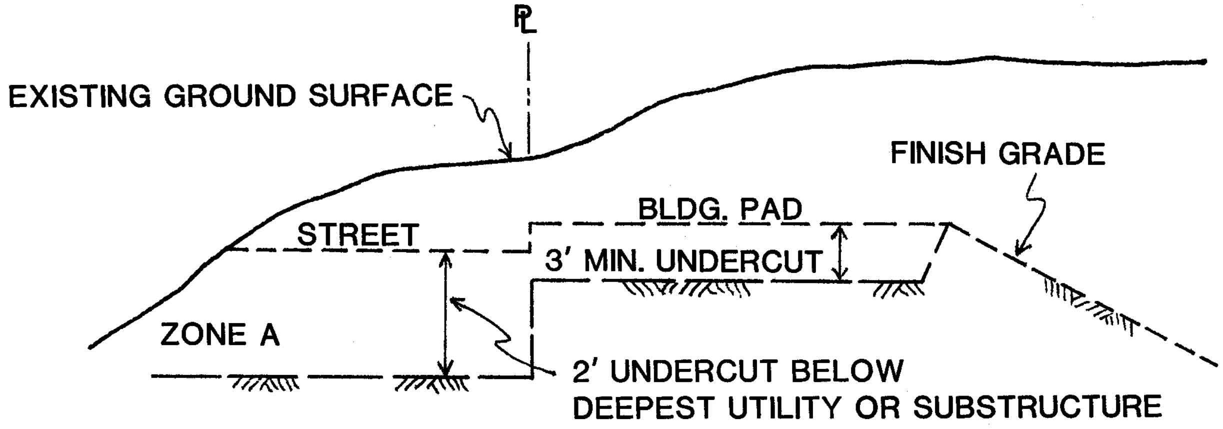

NO SCALE

TYPICAL GRADING WITHIN PROPOSED FILL AREAS

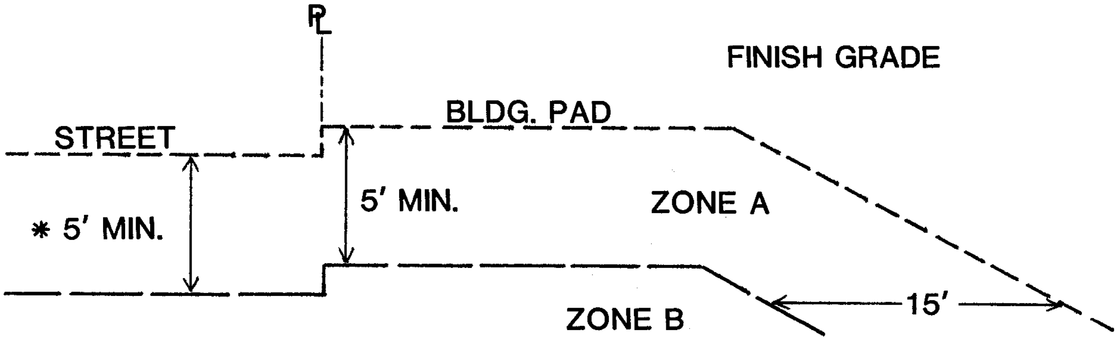

LEGEND

ZONE A ......"SOIL" FILL PLACED IN ACCORDANCE WITH THE RECOMMENDATIONS PRESENTED IN SECTION 11.2.3 OF THIS REPORT

ZONE B ......"SOIL-ROCK" AND/OR "ROCK" FILL PLACED IN ACCORDANCE WITH THE RECOMMENDATIONS PRESENTED IN SECTION 11.2.3 OF THIS REPORT

* 5' OR 1' BELOW DEEPEST UTILITY, WHICHEVER IS GREATER

TYPICAL OVERSIZE ROCK DISPOSAL – “SOIL-ROCK” FILL

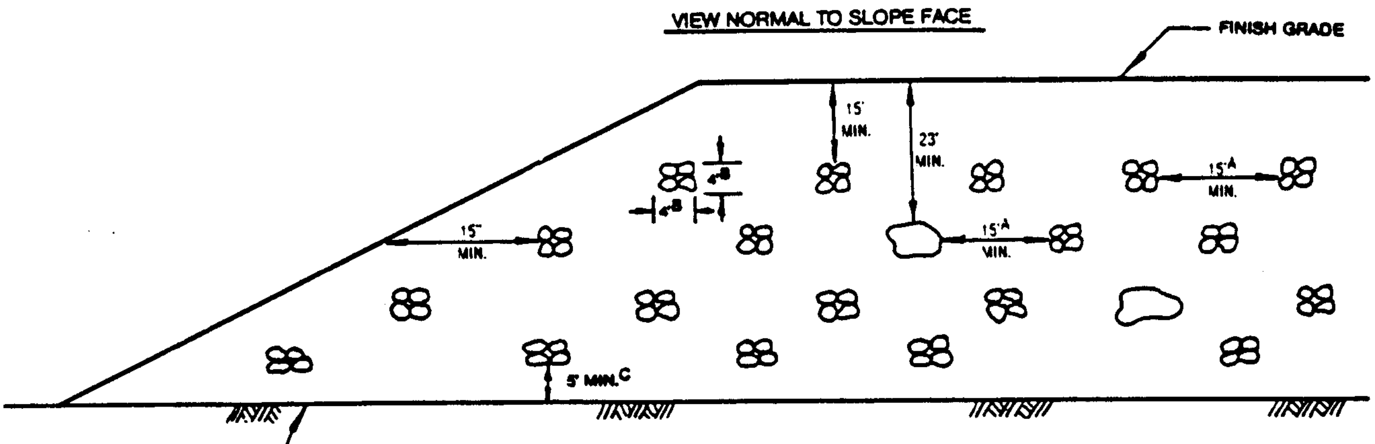

COMPETENT MATERIAL OR BEDROCK AS DETERMINED BY THE SOIL ENGINEER.

NOTE:
ORIENTATION OF WINDROWS MAY VARY BUT SHALL BE AS RECOMMENDED BY SOIL ENGINEER.

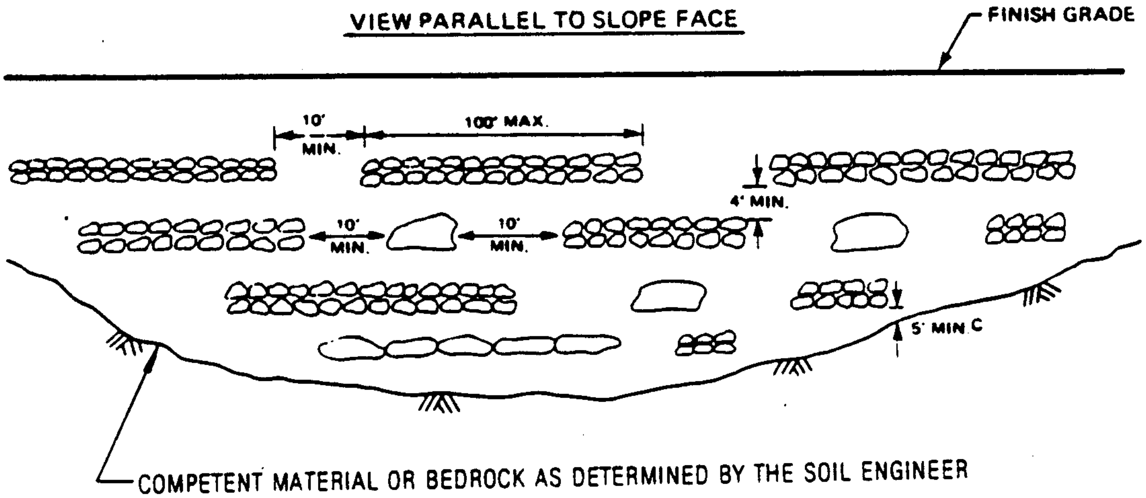

COMPETENT MATERIAL OR BEDROCK AS DETERMINED BY THE SOIL ENGINEER

NOTES:

A. ONE EQUIPMENT WIDTH OR A MINIMUM OF 15 FEET.

B. HEIGHT AND WIDTH MAY VARY DEPENDING ON ROCK SIZE AND TYPE OF EQUIPMENT.

C. IF APPROVED BY THE SOIL ENGINEER, WINDROWS MAY BE PLACED DIRECTLY ON COMPETENT MATERIALS OR BEDROCK PROVIDING ADEQUATE SPACE IS AVAILABLE FOR COMPACTION.

D. VOIDS IN WINDROW TO BE FILLED BY FLOODING GRANULAR SOIL INTO PLACE. GRANULAR SOIL SHALL MEAN ANY SOIL WHICH HAS A UNIFIED SOIL CLASSIFICATION SYSTEM (UBC 29-1) DESIGNATION OF SM, SP, SW, GM, GP, OR GW.

E. AFTER FILL BETWEEN WINDROWS IS PLACED AND COMPACTED WITH THE LIFT OF FILL COVERING WINDROW, WINDROW SHALL BE PROOF-ROLLED WITH D-9 DOZER OR EQUIVALENT.

F. OVERSIZED ROCK IS DEFINED AS LARGER THAN 12" IN SIZE.

APPENDIX N

Worksheet H: Factor of Safety and Design Infiltration Rate Worksheet

(DA 1);

Worksheet H: Factor of Safety and Design Infiltration Rate Worksheet

(DA 2)

(from Orange County TGD for Project WQMPs)

Worksheet H: Factor of Safety and Design Infiltration Rate Worksheet (DA 1)

Factor Category		Factor Description	Assigned Weight (w)	Factor Value (v)	Product (p) p = w x v
A	Suitability Assessment	Soil assessment methods	0.25	2	.25
		Predominant soil texture	0.25	1	.25
		Site soil variability	0.25	1	.50
		Depth to groundwater / impervious layer	0.25	1	.25
		Suitability Assessment Safety Factor, $S_A = \Sigma p$			1.25
B	Design	Tributary area size	0.25	2	.50
		Level of pretreatment/ expected sediment loads	0.25	1	.25
		Redundancy	0.25	1	.25
		Compaction during construction	0.25	1	.25
		Design Safety Factor, $S_B = \Sigma p$			1.25
Combined Safety Factor, $S_{Total} = S_A \times S_B$					1.5625 (Use 2.0 per Note below)
Observed Infiltration Rate, inch/hr, $K_{observed}$ (corrected for test-specific bias) (Most conservative test result)					7.98
Design Infiltration Rate, in/hr, $K_{DESIGN} = K_{Observed} / S_{Total}$					3.99
Supporting Data					
Briefly describe infiltration test and provide reference to test forms:					

Note: The minimum combined adjustment factor shall not be less than 2.0 and the maximum combined adjustment factor shall not exceed 9.0.

VII.4. Considerations for Infiltration Rate Factor of Safety

Given the known potential for infiltration BMPs to fail over time, an appropriate factor of safety applied to infiltration testing results must be mandatory. The infiltration rate will decline between maintenance cycles as the BMP surface becomes occluded and particulates accumulate in the infiltrative layer. Monitoring of actual facility performance has shown that the full-scale infiltration rate is far lower than the rate measured by small-scale testing. It is important that adequate conservatism is incorporated in the selection of design infiltration rates. The design infiltration rate discussed here is the infiltration rate of the underlying soil, below the elevation to which soil amendments would not be provided.

The factor of safety that should be applied to measured infiltration rates is a function of:

- Suitability of underlying soils for infiltration
- The infiltration system design.

These factors are discussed in the following sections.

The *measured infiltration rate* calculated for the purpose of infiltration infeasibility screening (**TGD Section 2.4.2.4**) shall be based on a factor of safety of 2.0 applied to the rates obtained from the infiltration test results. No adjustments from this value are permitted. The factor of safety used to compute the *design infiltration rate* shall not be less than 2.0, but may be higher at the discretion of the design engineer and acceptance of the plan reviewer, per the considerations described in the following sections.

It is recognized that there are competing objectives in the selection of a factor of safety. There is an initial economic incentive to select a lower factor of safety to yield smaller BMP designs. A low factor of safety also allows a broader range of systems to be considered “feasible” in marginal conditions. However, there are both economic and environmental incentives for the use of an appropriate factor of safety to prevent premature failure and substandard performance. The use of an artificially low factor of safety to demonstrate feasibility in the design process is shortsighted in that it does not consider the long term feasibility of the system.

The best way to balance these competing factors is through a commitment to thorough site investigation, use of effective pretreatment controls, good construction practices, the commitment to restore the infiltration rates of soils that are damaged by prior uses or construction practices, and the commitment to effective maintenance practices. However, these commitments do not mitigate the need to apply a factor of safety to account for uncertainty and long term deterioration that cannot be technically mitigated. Therefore, a factor of safety of no less than 2.0 shall be used to compute the design infiltration rate.

VII.4.1. Site Suitability Considerations

Suitability assessment related considerations include (**Table VII.3**):

- Soil assessment methods – the site assessment extent (e.g., number of borings, test pits, etc.) and the measurement method used to estimate the short-term infiltration rate.
- Predominant soil texture/percent fines – soil texture and the percent of fines can greatly influence the potential for clogging.
- Site soil variability – site with spatially heterogeneous soils (vertically or horizontally) as determined from site investigations are more difficult to estimate average properties for resulting in a higher level of uncertainty associated with initial estimates.
- Depth to seasonal high groundwater/impervious layer – groundwater mounding may become an issue during excessively wet conditions where shallow aquifers or shallow clay lenses are present.

Table VII.3: Suitability Assessment Related Considerations for Infiltration Facility Safety Factors

Consideration	High Concern	Medium Concern	Low Concern
Assessment methods (see explanation below)	Use of soil survey maps or simple texture analysis to estimate short-term infiltration rates	Direct measurement of ≥ 20 percent of infiltration area with localized infiltration measurement methods (e.g., infiltrometer)	Direct measurement of ≥ 50 percent of infiltration area with localized infiltration measurement methods or Use of extensive test pit infiltration measurement methods
Texture Class	Silty and clayey soils with significant fines	Loamy soils	Granular to slightly loamy soils
Site soil variability	Highly variable soils indicated from site assessment or limited soil borings collected during site assessment	Soil borings/test pits indicate moderately homogeneous soils	Multiple soil borings/test pits indicate relatively homogeneous soils
Depth to groundwater/ impervious layer	<5 ft below facility bottom	5-10 ft below facility bottom	>10 below facility bottom

Localized infiltration testing refers to methods such as the double ring infiltrometer test (ASTM D3385-88) which measure infiltration rates over an area less than 10 sq-ft, may include lateral flow, and do not attempt to account for heterogeneity of soil. The amount of area each test represents should be estimated depending on the observed heterogeneity of the soil.

Extensive infiltration testing refers to methods that include excavating a significant portion of the proposed infiltration area, filling the excavation with water, and monitoring drawdown. The excavation should be to the depth of the proposed infiltration surface and ideally be at least 50 to 100 square feet.

In all cases, testing should be conducted in the area of the proposed BMP where, based on review of available geotechnical data, soils appear least likely to support infiltration.

VII.4.2. Design Related Considerations

Design related considerations include (**Table VII.4**):

- Size of area tributary to facility – all things being equal, risk factors related to infiltration facilities increase with an increase in the tributary area served. Therefore facilities serving larger tributary areas should use more restrictive adjustment factors.
- Level of pretreatment/expected influent sediment loads – credit should be given for good pretreatment by allowing less restrictive factors to account for the reduced probability of clogging from high sediment loading. Also, facilities designed to capture runoff from relatively clean surfaces such as rooftops are likely to see low sediment loads and therefore should be allowed to apply less restrictive safety factors.
- Redundancy – facilities that consist of multiple subsystems operating in parallel such that parts of the system remains functional when other parts fail and/or bypass should be rewarded for the built-in redundancy with less restrictive correction and safety factors. For example, if bypass flows would be at least partially treated in another BMP, the risk of discharging untreated runoff in the event of clogging the primary facility is reduced. A bioretention facility that overflows to a landscaped area is another example.
- Compaction during construction – proper construction oversight is needed during construction to ensure that the bottoms of infiltration facility are not overly compacted. Facilities that do not commit to proper construction practices and oversight should have to use more restrictive correction and safety factors.

Table VII.4: Design Related Considerations for Infiltration Facility Safety Factors

Consideration	High Concern	Medium Concern	Low Concern
Tributary area size	Greater than 10 acres.	Greater than 2 acres but less than 10 acres.	2 acres or less.
Level of pretreatment/ expected influent sediment loads	Pretreatment from gross solids removal devices only, such as hydrodynamic separators, racks and screens AND tributary area includes landscaped areas, steep slopes, high traffic areas, or any other areas expected to produce high sediment, trash, or debris loads.	Good pretreatment with BMPs that mitigate coarse sediments such as vegetated swales AND influent sediment loads from the tributary area are expected to be relatively low (e.g., low traffic, mild slopes, disconnected impervious areas, etc.).	Excellent pretreatment with BMPs that mitigate fine sediments such as bioretention or media filtration OR sedimentation or facility only treats runoff from relatively clean surfaces, such as rooftops.
Redundancy of treatment	No redundancy in BMP treatment train.	Medium redundancy, other BMPs available in treatment train to maintain at least 50% of function of facility in event of failure.	High redundancy, multiple components capable of operating independently and in parallel, maintaining at least 90% of facility functionality in event of failure.
Compaction during construction	Construction of facility on a compacted site or elevated probability of unintended/ indirect compaction.	Medium probability of unintended/ indirect compaction.	Heavy equipment actively prohibited from infiltration areas during construction and low probability of unintended/ indirect compaction.

VII.4.3. Determining Factor of Safety

A factor of safety shall be used. To assist in selecting the appropriate design infiltration rate, the measured short term infiltration rate should be adjusted using a weighted average of several safety factors using the worksheet shown in **Worksheet H** below. The design infiltration rate would be determined as follows:

1. For each consideration shown in **Table VII.3** and **Table VII.4** above, determine whether the consideration is a high, medium, or low concern.
2. For all high concerns, assign a factor value of 3, for medium concerns, assign a factor value of 2, and for low concerns assign a factor value of 1.
3. Multiply each of the factors by the corresponding weight to get a product.
4. Sum the products within each factor category to obtain a safety factor for each.
5. Multiply the two safety factors together to get the final combined safety factor. If the combined safety factor is less than 2, then 2 shall be used as the safety factor.
6. Divide the measured short term infiltration rate by the combined safety factor to obtain the adjusted design infiltration rate for use in sizing the infiltration facility.

The design infiltration rate shall be used to size BMPs and to evaluate their expected long term performance. This rate shall not be less than 2, but may be higher at the discretion of the design engineer.

Worksheet H: Factor of Safety and Design Infiltration Rate Worksheet (DA 2)

Factor Category		Factor Description	Assigned Weight (w)	Factor Value (v)	Product (p) p = w x v
A	Suitability Assessment	Soil assessment methods	0.25	2	.25
		Predominant soil texture	0.25	1	.25
		Site soil variability	0.25	1	.50
		Depth to groundwater / impervious layer	0.25	1	.25
		Suitability Assessment Safety Factor, $S_A = \Sigma p$			1.25
B	Design	Tributary area size	0.25	1	.25
		Level of pretreatment/ expected sediment loads	0.25	1	.25
		Redundancy	0.25	1	.25
		Compaction during construction	0.25	1	.25
		Design Safety Factor, $S_B = \Sigma p$			1.00

Combined Safety Factor, $S_{Total} = S_A \times S_B$	1.25 (Use 2.0 per Note below)
Observed Infiltration Rate, inch/hr, $K_{observed}$ (corrected for test-specific bias) (Most conservative test result)	7.98
Design Infiltration Rate, in/hr, $K_{DESIGN} = K_{Observed} / S_{Total}$	3.99

Supporting Data

Briefly describe infiltration test and provide reference to test forms:

Note: The minimum combined adjustment factor shall not be less than 2.0 and the maximum combined adjustment factor shall not exceed 9.0.

VII.4. Considerations for Infiltration Rate Factor of Safety

Given the known potential for infiltration BMPs to fail over time, an appropriate factor of safety applied to infiltration testing results must be mandatory. The infiltration rate will decline between maintenance cycles as the BMP surface becomes occluded and particulates accumulate in the infiltrative layer. Monitoring of actual facility performance has shown that the full-scale infiltration rate is far lower than the rate measured by small-scale testing. It is important that adequate conservatism is incorporated in the selection of design infiltration rates. The design infiltration rate discussed here is the infiltration rate of the underlying soil, below the elevation to which soil amendments would not be provided.

The factor of safety that should be applied to measured infiltration rates is a function of:

- Suitability of underlying soils for infiltration
- The infiltration system design.

These factors are discussed in the following sections.

The *measured infiltration rate* calculated for the purpose of infiltration infeasibility screening (**TGD Section 2.4.2.4**) shall be based on a factor of safety of 2.0 applied to the rates obtained from the infiltration test results. No adjustments from this value are permitted. The factor of safety used to compute the *design infiltration rate* shall not be less than 2.0, but may be higher at the discretion of the design engineer and acceptance of the plan reviewer, per the considerations described in the following sections.

It is recognized that there are competing objectives in the selection of a factor of safety. There is an initial economic incentive to select a lower factor of safety to yield smaller BMP designs. A low factor of safety also allows a broader range of systems to be considered “feasible” in marginal conditions. However, there are both economic and environmental incentives for the use of an appropriate factor of safety to prevent premature failure and substandard performance. The use of an artificially low factor of safety to demonstrate feasibility in the design process is shortsighted in that it does not consider the long term feasibility of the system.

The best way to balance these competing factors is through a commitment to thorough site investigation, use of effective pretreatment controls, good construction practices, the commitment to restore the infiltration rates of soils that are damaged by prior uses or construction practices, and the commitment to effective maintenance practices. However, these commitments do not mitigate the need to apply a factor of safety to account for uncertainty and long term deterioration that cannot be technically mitigated. Therefore, a factor of safety of no less than 2.0 shall be used to compute the design infiltration rate.

VII.4.1. Site Suitability Considerations

Suitability assessment related considerations include (**Table VII.3**):

- Soil assessment methods – the site assessment extent (e.g., number of borings, test pits, etc.) and the measurement method used to estimate the short-term infiltration rate.
- Predominant soil texture/percent fines – soil texture and the percent of fines can greatly influence the potential for clogging.
- Site soil variability – site with spatially heterogeneous soils (vertically or horizontally) as determined from site investigations are more difficult to estimate average properties for resulting in a higher level of uncertainty associated with initial estimates.
- Depth to seasonal high groundwater/impervious layer – groundwater mounding may become an issue during excessively wet conditions where shallow aquifers or shallow clay lenses are present.

Table VII.3: Suitability Assessment Related Considerations for Infiltration Facility Safety Factors

Consideration	High Concern	Medium Concern	Low Concern
Assessment methods (see explanation below)	Use of soil survey maps or simple texture analysis to estimate short-term infiltration rates	Direct measurement of ≥ 20 percent of infiltration area with localized infiltration measurement methods (e.g., infiltrometer)	Direct measurement of ≥ 50 percent of infiltration area with localized infiltration measurement methods or Use of extensive test pit infiltration measurement methods
Texture Class	Silty and clayey soils with significant fines	Loamy soils	Granular to slightly loamy soils
Site soil variability	Highly variable soils indicated from site assessment or limited soil borings collected during site assessment	Soil borings/test pits indicate moderately homogeneous soils	Multiple soil borings/test pits indicate relatively homogeneous soils
Depth to groundwater/ impervious layer	<5 ft below facility bottom	5-10 ft below facility bottom	>10 below facility bottom

Localized infiltration testing refers to methods such as the double ring infiltrometer test (ASTM D3385-88) which measure infiltration rates over an area less than 10 sq-ft, may include lateral flow, and do not attempt to account for heterogeneity of soil. The amount of area each test represents should be estimated depending on the observed heterogeneity of the soil.

Extensive infiltration testing refers to methods that include excavating a significant portion of the proposed infiltration area, filling the excavation with water, and monitoring drawdown. The excavation should be to the depth of the proposed infiltration surface and ideally be at least 50 to 100 square feet.

In all cases, testing should be conducted in the area of the proposed BMP where, based on review of available geotechnical data, soils appear least likely to support infiltration.

VII.4.2. Design Related Considerations

Design related considerations include (**Table VII.4**):

- Size of area tributary to facility – all things being equal, risk factors related to infiltration facilities increase with an increase in the tributary area served. Therefore facilities serving larger tributary areas should use more restrictive adjustment factors.
- Level of pretreatment/expected influent sediment loads – credit should be given for good pretreatment by allowing less restrictive factors to account for the reduced probability of clogging from high sediment loading. Also, facilities designed to capture runoff from relatively clean surfaces such as rooftops are likely to see low sediment loads and therefore should be allowed to apply less restrictive safety factors.
- Redundancy – facilities that consist of multiple subsystems operating in parallel such that parts of the system remains functional when other parts fail and/or bypass should be rewarded for the built-in redundancy with less restrictive correction and safety factors. For example, if bypass flows would be at least partially treated in another BMP, the risk of discharging untreated runoff in the event of clogging the primary facility is reduced. A bioretention facility that overflows to a landscaped area is another example.
- Compaction during construction – proper construction oversight is needed during construction to ensure that the bottoms of infiltration facility are not overly compacted. Facilities that do not commit to proper construction practices and oversight should have to use more restrictive correction and safety factors.

Table VII.4: Design Related Considerations for Infiltration Facility Safety Factors

Consideration	High Concern	Medium Concern	Low Concern
Tributary area size	Greater than 10 acres.	Greater than 2 acres but less than 10 acres.	2 acres or less.
Level of pretreatment/ expected influent sediment loads	Pretreatment from gross solids removal devices only, such as hydrodynamic separators, racks and screens AND tributary area includes landscaped areas, steep slopes, high traffic areas, or any other areas expected to produce high sediment, trash, or debris loads.	Good pretreatment with BMPs that mitigate coarse sediments such as vegetated swales AND influent sediment loads from the tributary area are expected to be relatively low (e.g., low traffic, mild slopes, disconnected impervious areas, etc.).	Excellent pretreatment with BMPs that mitigate fine sediments such as bioretention or media filtration OR sedimentation or facility only treats runoff from relatively clean surfaces, such as rooftops.
Redundancy of treatment	No redundancy in BMP treatment train.	Medium redundancy, other BMPs available in treatment train to maintain at least 50% of function of facility in event of failure.	High redundancy, multiple components capable of operating independently and in parallel, maintaining at least 90% of facility functionality in event of failure.
Compaction during construction	Construction of facility on a compacted site or elevated probability of unintended/ indirect compaction.	Medium probability of unintended/ indirect compaction.	Heavy equipment actively prohibited from infiltration areas during construction and low probability of unintended/ indirect compaction.

VII.4.3. Determining Factor of Safety

A factor of safety shall be used. To assist in selecting the appropriate design infiltration rate, the measured short term infiltration rate should be adjusted using a weighted average of several safety factors using the worksheet shown in **Worksheet H** below. The design infiltration rate would be determined as follows:

1. For each consideration shown in **Table VII.3** and **Table VII.4** above, determine whether the consideration is a high, medium, or low concern.
2. For all high concerns, assign a factor value of 3, for medium concerns, assign a factor value of 2, and for low concerns assign a factor value of 1.
3. Multiply each of the factors by the corresponding weight to get a product.
4. Sum the products within each factor category to obtain a safety factor for each.
5. Multiply the two safety factors together to get the final combined safety factor. If the combined safety factor is less than 2, then 2 shall be used as the safety factor.
6. Divide the measured short term infiltration rate by the combined safety factor to obtain the adjusted design infiltration rate for use in sizing the infiltration facility.

The design infiltration rate shall be used to size BMPs and to evaluate their expected long term performance. This rate shall not be less than 2, but may be higher at the discretion of the design engineer.

APPENDIX O

Preliminary Hydrology and Hydraulic Report for Madera at Citrus Trail Residential Project, NW Corner of E. Colton Avenue and Wabash Avenue, Redlands, California, 92374,

dated July 13, 2022

CA ENGINEERING, INC.

Planning • Engineering • Surveying

PRELIMINARY HYDROLOGY AND HYDRAULIC REPORT

FOR

Madera at Citrus Trail Residential Project

NW Corner of E. Colton Avenue and Wabash Avenue
Redlands, California 92374

Date: July 13, 2022

PLANS PREPARED UNDER THE SUPERVISION OF:

Fred Cornwell, P.E. - R.C.E 45591 Date

Table of Contents

1.0 INTRODUCTION

The purpose of this report is to present the hydrology analysis and drainage calculations for a proposed residential project located in the City of Redlands, California. The site proposes to construct 103 residential detached townhouses on approximately 9.0 net acres.

2.0 EXISTING DRAINAGE CONDITIONS

The subject site is located on the northwest corner of E. Colton Avenue and N. Wabash Avenue in the city of Redlands, California. The subject site is an approximately 9-acre, undeveloped parcel of land covered in grass and vegetation.

The on-site drainage primarily drains from the east to the west and slightly from the north to the south. The site is relatively flat with approximately a 2-3 percent fall from east to west across the entire site. From north to south the fall is even less significant with approximately 2 feet of fall across the 633 foot wide site, or about 0.3%.

The site is bounded to the south and east by Colton Ave. and Wabash Ave. respectively. To the north there is a single family residential development and to the west there is a mobile home park.

The property to the west is developed with a wall that blocks the natural drainage and directs it to the south into a concrete drainage channel and then into a parkway culvert that outlets into Colton Ave.

The rational method was used to evaluate the existing site conditions and runoff peak flow rates to determine the amount of flows that will need to be conveyed through our parcel, and to determine flows that can be released to comply with the Technical Guidance Document (TGD). Hydrologic Conditions of Concern (HCOC's) will also need to be satisfied due to existing conditions downstream. We prepared an existing hydrology map with the associated calculations.

3.0 BASIS OF DESIGN CRITERIA

The site will be designed to capture and infiltrate the Design Capture Volume (DCV) per the County's WQMP manual. The storm events with greater runoff will be collected into the infiltration chambers and then conveyed to Colton Ave. via a proposed storm drain system. The runoff will be allowed to "bubble" out of the constructed catch basin on Colton Ave. The storm flows will be increased for the larger storms due to the increased impervious surfaces created by the proposed development. These increases will be discussed later in this report.

4.0 PROPOSED DRAINAGE CONDITIONS

The proposed drainage for the easterly portion of the site will drain via area drains and access driveways that convey the runoff to two proposed streets that run from the east to the west. The runoff will be collected into catch basins at the westerly ends of the streets that will deposit the runoff into an infiltration facility located just westerly of the proposed park.

The majority of the westerly portion of the site will drain to a street that runs from north to the south. The street will collect the runoff and convey the flows to a storm drain system that will also connect to said infiltration facility.

The remaining small portion of the site located at the southwest corner will surface flow to a drainage channel that will convey the flows to an existing concrete V-gutter that is connected to Colton Ave. via a parkway culvert. This channel will have an inlet that will collect the low flows and direct them to a smaller infiltration facility located at the southwest corner of the development.

The infiltration facilities consists of a 96” perforated CMP pipes with gravel as a base that will allow infiltration into the soils below.

The infiltration facilities are sized to detain the Design Capture Volume (DCV) per county LID requirements. The detention pipe will also satisfy Hydrologic Condition of Concern (HCOC) requirements which states that the proposed 2 year storm flows must be within 105% of the existing 2 year storm flows.

The larger facility’s storm flows, greater than the DCV, will be directed into a storm drain system that runs southerly into Colton Ave. and then westerly on Colton Ave to a proposed catch basin westerly of the proposed development. This catch basin will allow the storm flows to bubble out of the catch basin into Colton Ave. once the hydraulic grade line (HGL) rises above the street elevation. We will utilize the 100 year storm event’s flow to analyze this system to assure the site is protected from possible flooding.

The emergency overflow for the site will be satisfied by the onsite north to south street capacity, and a drainage channel that connects the south westerly access to the existing concrete V gutter.

5.0 HYDROLOGICAL AND SOIL DATA

References used in this report were the following:

- San Bernardino County Flood Control District, Hydrology Manual, dated August 1986.
- NOAA Atlas 14, Volume 6, Version 2, Point Precipitation Frequency Estimates.

Based on the Stormwater Facility Mapping tool for San Bernardino County, the hydrological soils group designation the site consists of soil groups “A” & “B”. The soil group designation is presented in the mapping tool image found in Section 14.0.

- Slope of Intensity Duration Curve = 0.6

The point precipitation frequency estimates for the project site are presented in Section 14.0.

6.0 HYDROLOGY RESULTS

The results of the 2, 5, 10, 25, and 100-year storm events for both the existing and proposed conditions are shown on the hydrology maps in this report (Exhibits A & B).

7.0 WATER QUALITY

To satisfy San Bernardino County water quality requirements, the site will utilize two 96” storm drain infiltration facilities, as catch basin inlet filters as BMP’s. More information on the water quality is shown on the WQMP Site Plan (Exhibit D).

8.0 FLOOD PLAIN DESIGNATION

The site falls within a Zone “X” or Zone “D” designation under the FEMA Map 06071C8709J, dated September 2, 2016. Zone X (Shaded) represents areas determined to be outside the 0.2% annual chance, Zone “D” Areas in which flood hazards are undetermined, but possible. The FEMA food map is included in Exhibit C.

9.0 METHODOLOGY

The San Bernardino County Rational Method described in the San Bernardino County Hydrology Manual were utilized to determine the storm flows. The Computer Software Programs used were Advanced Engineering Software (AES) Rational Tabling Version 15.0 for the Rational Method and the CH1 module v1.8 for the basin routing.

This report analyzes the 2, 5, 10, 25 & 100 year storms for the rational method and the 2 & 5 year storms basin routing.

The infiltration facility's top of pipe elevation will be set at the exit elevation for the proposed bubble up catch basin which will allow the facility to capture all of the DCV and allow it to infiltrate before the storm flows will begin to exit onto Colton Ave. A hydraulic calculation that estimates the HGL necessary to push the 100 year on-site flows out of the catch basin is located in Appendix "D". The HGL at the storage facility will be compared to the on-site low points to assure the site will be protected from flooding.

10.0 HYDRAULICS

ON-SITE DRAINAGE SYSTEM
The on-site drainage system consists of storm drain facilities collecting the storm flows and conveying them to a infiltration facility. The infiltration facility will allow the DCV to infiltrate per the County's requirements. Once the storm flows fill the infiltration facility, the excess flows will be conveyed to a bubble up catch basin located on Colton Ave. via a 48" storm drain.

EMERGENCY OVERFLOW
The site drains from the east to the west and then to the south to Colton Ave. If the drainage system fails, the flows must be conveyed to Colton Ave. without flooding the proposed buildings. There are four critical points that will be analyzed.

Point 1:
This point is the high point located on the street that runs north to south. The cross section is 32' wide from curb to curb and will act as a weir. To calculate the depth of flow over this section we will use the weir equation in King's handbook (5-540) and the following values:

$H=(Q/CL)^{0.67}$

Q = 3.733 cfs (Areas A1 & A2 as shown on the proposed hydrology map)
C= 2.7
L=32'

$H=(3.83/2.7*32)^{0.67} = 0.12'$

Since the street is crowned an average capacity depth can be calculated by the area below the top of curb divided by the width of the street. The area below the top of curb is 8.13 cf (See Exhibit "X") and the street width is 32' which yields 8.13cf/32'= 0.25' which is twice the depth of the flows going over the street section.

Point 2:
After the flows crest the high point they are conveyed southerly along said street. The street will transition from a crowned section to a tilted section which will put all the flows to the westerly curb. To calculate the depth of flows we will utilize FlowMaster v 5.15 and the 100 year flows going to the on-site infiltration facility (Node 3) as shown on the hydrology map.

Q100= 30.73 cfs
Per the FlowMaster output the depth of flow will be 0.03’ below the 8” low curb – see street output Appendix “D”

Point 3:
Once the flow reaches the access driveway for Units 1-3, it will be directed westerly down said access to a concrete channel. We have performed the same calculation as for Point 2.

Q100= 30.73 cfs
Per the FlowMaster output the depth of flow will be 0.13’ below the 8” low curb – see access output Appendix “D”

Point 4:
The flow will enter a 4’ wide 2.2’ deep concrete channel at the end of the access driveway.

Q100= 31.85 cfs(addition of area A5)
Per the FlowMaster output the depth of flow will be 1.0’ below the rim of the concrete channel – see 4’ conc channel output Appendix “D”

11.0 RESULTS

HYDROLOGY AND HYDRAULICS STUDY

To determine the pre and post construction flows for the proposed development, we will utilize the existing and proposed hydrology maps (EXHIBITS A & B) and associated calculations (Appendies A & B). We have also routed the proposed flows through the proposed basins (Appendix C) with the storage being the volumes of the pipes and the outflow being the infiltration of the facilities. All the storm events will be reduced by the total infiltration imparted by the proposed infiltration facilities being 0.388 cfs (See “Storage Volume & Outfall Calculations Appendix XD). The results are as follows:

FLOW TABLE

STORM EVENT	EXISTING FLOWS (CFS)	PROPOSED FLOWS (CFS)	OUTFLOW FORM BASIN (CFS)	INCREASE FLOW (CFS) (BASIN – (EXISTING+0.388))
2 YEAR STORM	0.00	8.21	0.00	0.00
5 YEAR STORM	0.00	13.94	0.00	0.00
10 YEAR STORM	2.66	18.19	18.19	15.14
25 YEAR STORM	4.96	22.86	22.86	17.51
100 YEAR STORM	11.65	31.85	31.85	19.81

WATER QUALITY

Per the County of San Bernardino water quality requirements, the proposed project will treat the project's DCV (Design Capture Volume).

The site will sheet flow into a drainage system that will convey them into a 96" storage infiltration facility for each drainage area. The facilities are sized per the County's WQMP guidelines for infiltration – see the calculations on the WQMP Site plan (Exhibit D). The property is also subject to Hydraulic Conditions of Concern and the development must mitigate the 2 year proposed storm runoff to be within 105% of the 2 year existing storm event.

We have modeled the 2 year storm event utilizing (AES) small area hydrograph module CH1 – v1.8 for the Hydrograph Routing to determine what effect the 2 year event will have on the proposed facilities. The basin routing (see Appendix C) shows that the proposed facilities will reduce the 2 year storm flows, thus satisfying the County's criteria for HCOC's.

12.0 CONCLUSION

In the Results (Section 11.0), it is shown that the proposed flows will be increased for storm events greater than the 5 year storm. When the storm flows are greater than the 5 year storm the infiltration facilities fill completely before the peak flow is experienced, therefore, the facilities will minimally reduce the greater flows.

In the Hydraulics (Section 10.0), it is shown that the proposed site will mitigate the 2 & 5 year storms on site and the proposed drainage facilities are adequate to convey the storm flows to Colton Ave. It is also shown the emergency overflow for the site is adequate if the drainage facilities fail.

13.0 VICINITY MAP

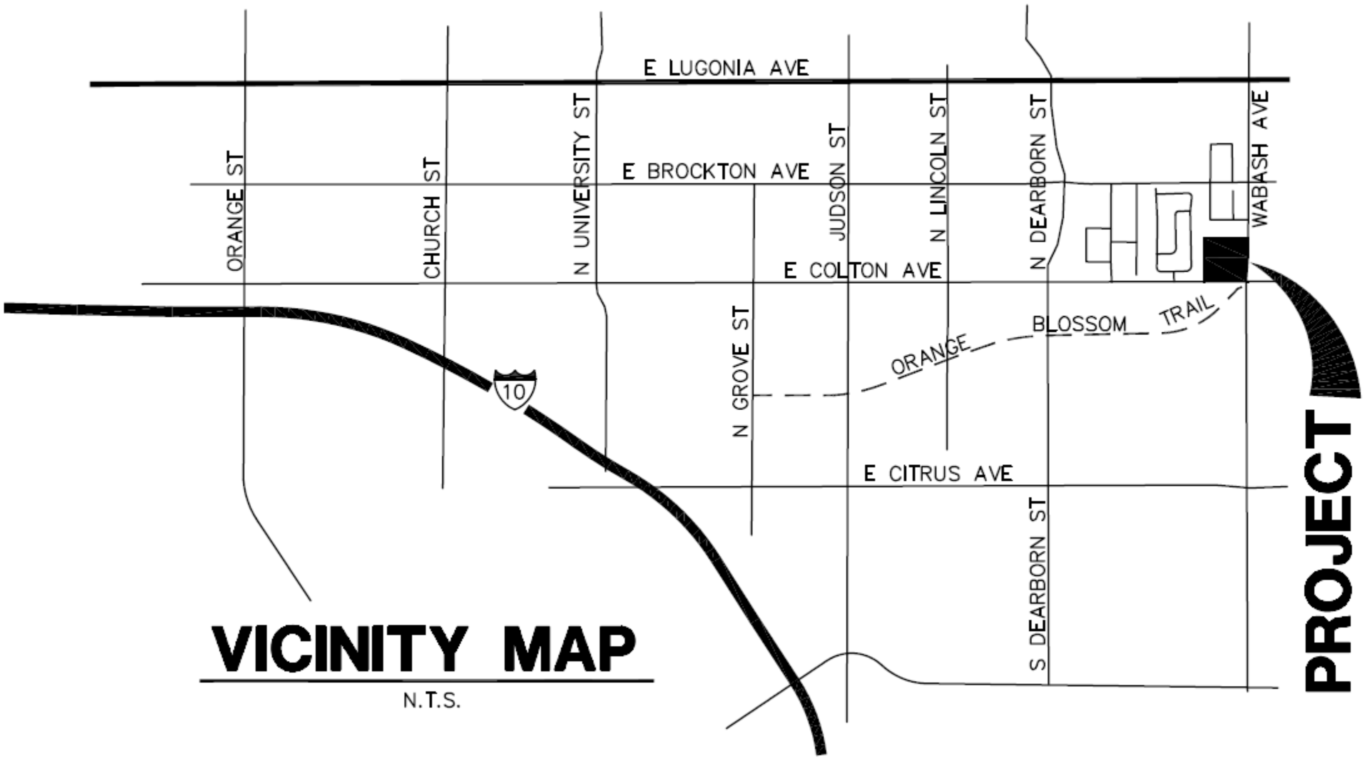

14.0 SOIL AND RAINFALL DATA TABLES

WQMP Project Report

County of San Bernardino Stormwater Program

Santa Ana River Watershed Geodatabase

Tuesday, June 21, 2022

Note: The information provided in this report and on the Stormwater Geodatabase for the County of San Bernardino Stormwater Program is intended to provide basic guidance in the preparation of the applicant's Water Quality Management Plan (WQMP) and should not be relied upon without independent verification.

Project Site Parcel Number(s):	016829102
Project Site Acreage:	9
HCOC Exempt Area:	No
Closest Receiving Waters: **(Applicant to verify based on local drainage facilities and topography.)**	**System Number** - 0-000-00 **Facility Name** - **Owner** - SBCFCD
Closest channel segment's susceptibility to Hydromodification:	EHM
Highest downstream hydromodification susceptibility:	High
Is this drainage segment subject to TMDLs?	No
Are there downstream drainage segments subject to TMDLs?	No
Is this drainage segment a 303d listed stream?	No
Are there 303d listed streams downstream?	Yes
Are there unlined downstream waterbodies?	No
Project Site Onsite Soil Group(s):	A, B
Environmentally Sensitive Areas within 200':	None
Groundwater Depth (FT):	-171
Parcels with potential septic tanks within 1000':	No
Known Groundwater Contamination Plumes within 1000':	No
Studies and Reports Related to Project Site:	CSDP 4 CALC SHEET FOR HYDRO CSDP 4 Hydrological Design Criteria SBVMWD High Groundwater / Pressure Zone Area

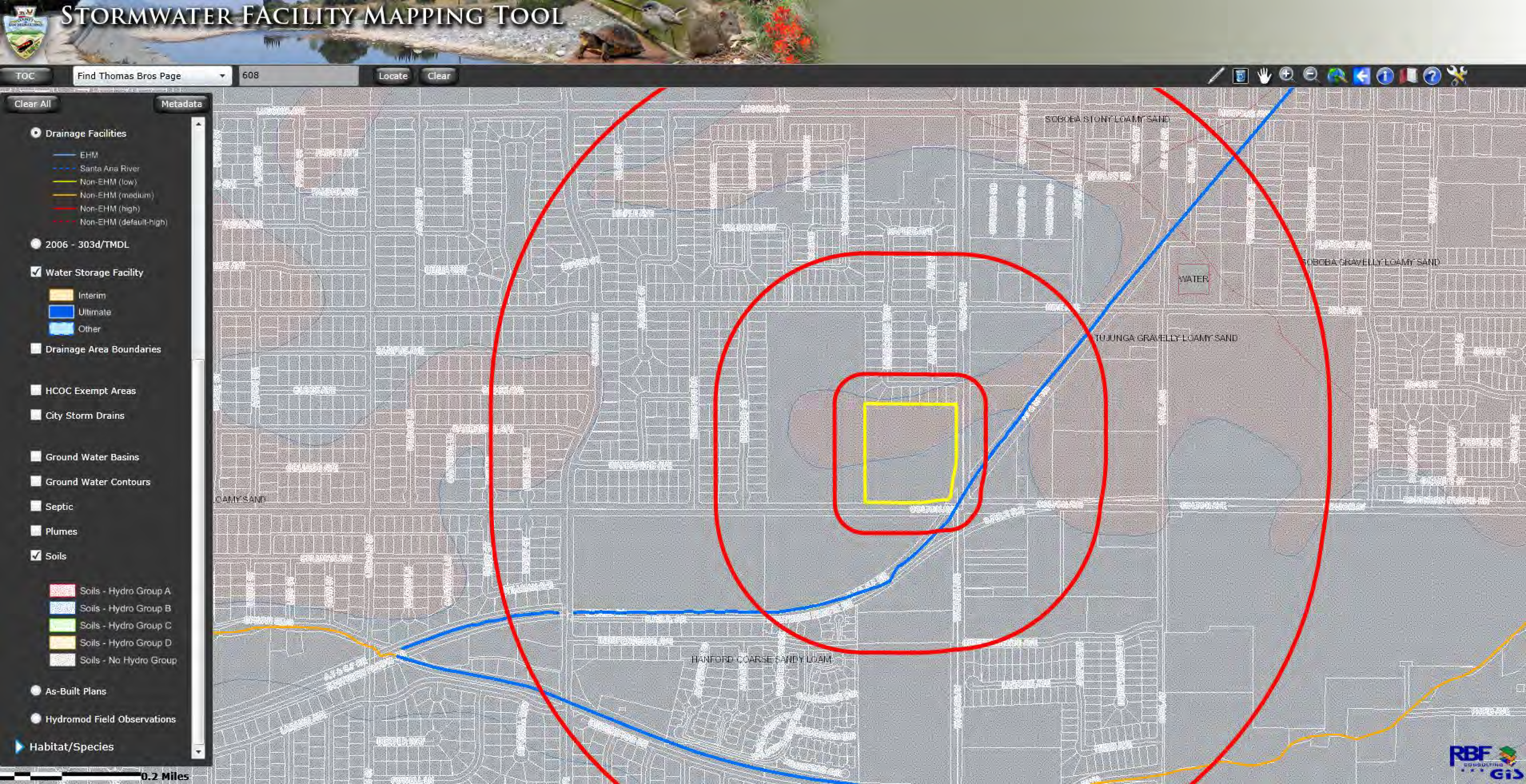

608

● Drainage Facilities
- EHM
- Santa Ana River
- Non-EHM (low)
- Non-EHM (medium)
- Non-EHM (high)
- Non-EHM (default-high)

○ 2006 - 303d/TMDL

☑ Water Storage Facility
- Interim
- Ultimate
- Other

☐ Drainage Area Boundaries

☐ HCOC Exempt Areas

☐ City Storm Drains

☐ Ground Water Basins

☐ Ground Water Contours

☐ Septic

☐ Plumes

☑ Soils
- Soils - Hydro Group A
- Soils - Hydro Group B
- Soils - Hydro Group C
- Soils - Hydro Group D
- Soils - No Hydro Group

○ As-Built Plans

○ Hydromod Field Observations

Habitat/Species

NOAA Atlas 14, Volume 6, Version 2
Location name: Redlands, California, USA*
Latitude: 34.0629°, Longitude: -117.139°
Elevation: 1616.69 ft**
* source: ESRI Maps
** source: USGS

POINT PRECIPITATION FREQUENCY ESTIMATES

Sanja Perica, Sarah Dietz, Sarah Heim, Lillian Hiner, Kazungu Maitaria, Deborah Martin, Sandra Pavlovic, Ishani Roy, Carl Trypaluk, Dale Unruh, Fenglin Yan, Michael Yekta, Tan Zhao, Geoffrey Bonnin, Daniel Brewer, Li-Chuan Chen, Tye Parzybok, John Yarchoan

NOAA, National Weather Service, Silver Spring, Maryland

PF_tabular | PF_graphical | Maps_&_aerials

PF tabular

PDS-based point precipitation frequency estimates with 90% confidence intervals (in inches)[1]

Duration	Average recurrence interval (years)									
	1	2	5	10	25	50	100	200	500	1000
5-min	**0.104** (0.087-0.127)	**0.137** (0.114-0.167)	**0.183** (0.151-0.223)	**0.222** (0.183-0.273)	**0.279** (0.222-0.355)	**0.326** (0.253-0.423)	**0.376** (0.285-0.501)	**0.430** (0.317-0.590)	**0.509** (0.359-0.729)	**0.575** (0.392-0.852)
10-min	**0.149** (0.124-0.181)	**0.196** (0.163-0.239)	**0.262** (0.217-0.319)	**0.319** (0.262-0.392)	**0.400** (0.318-0.509)	**0.467** (0.363-0.607)	**0.539** (0.408-0.718)	**0.617** (0.454-0.846)	**0.730** (0.515-1.04)	**0.823** (0.561-1.22)
15-min	**0.181** (0.150-0.219)	**0.238** (0.197-0.289)	**0.317** (0.263-0.386)	**0.385** (0.317-0.473)	**0.484** (0.384-0.616)	**0.565** (0.439-0.734)	**0.652** (0.494-0.868)	**0.746** (0.550-1.02)	**0.883** (0.623-1.26)	**0.996** (0.679-1.48)
30-min	**0.265** (0.221-0.322)	**0.349** (0.290-0.424)	**0.465** (0.386-0.567)	**0.566** (0.465-0.696)	**0.711** (0.565-0.904)	**0.830** (0.645-1.08)	**0.957** (0.726-1.28)	**1.10** (0.807-1.50)	**1.30** (0.915-1.86)	**1.46** (0.997-2.17)
60-min	**0.374** (0.311-0.454)	**0.491** (0.408-0.597)	**0.655** (0.543-0.799)	**0.797** (0.655-0.979)	**1.00** (0.795-1.27)	**1.17** (0.908-1.52)	**1.35** (1.02-1.80)	**1.54** (1.14-2.12)	**1.83** (1.29-2.61)	**2.06** (1.40-3.05)
2-hr	**0.535** (0.446-0.650)	**0.692** (0.575-0.842)	**0.908** (0.753-1.11)	**1.09** (0.897-1.34)	**1.35** (1.07-1.72)	**1.56** (1.22-2.03)	**1.79** (1.35-2.38)	**2.03** (1.49-2.78)	**2.37** (1.67-3.39)	**2.64** (1.80-3.92)
3-hr	**0.656** (0.546-0.796)	**0.842** (0.700-1.02)	**1.10** (0.908-1.34)	**1.31** (1.08-1.61)	**1.61** (1.28-2.05)	**1.86** (1.44-2.41)	**2.11** (1.60-2.81)	**2.38** (1.76-3.27)	**2.77** (1.95-3.96)	**3.08** (2.10-4.56)
6-hr	**0.916** (0.762-1.11)	**1.17** (0.970-1.42)	**1.51** (1.25-1.84)	**1.79** (1.47-2.20)	**2.19** (1.74-2.78)	**2.50** (1.94-3.25)	**2.82** (2.14-3.76)	**3.16** (2.33-4.34)	**3.64** (2.57-5.21)	**4.02** (2.74-5.96)
12-hr	**1.24** (1.03-1.50)	**1.58** (1.31-1.92)	**2.03** (1.69-2.48)	**2.41** (1.98-2.96)	**2.93** (2.32-3.72)	**3.33** (2.59-4.33)	**3.74** (2.84-4.99)	**4.17** (3.07-5.72)	**4.76** (3.36-6.81)	**5.22** (3.56-7.74)
24-hr	**1.66** (1.47-1.92)	**2.14** (1.89-2.47)	**2.77** (2.44-3.21)	**3.29** (2.88-3.83)	**3.99** (3.38-4.81)	**4.53** (3.76-5.57)	**5.08** (4.12-6.40)	**5.65** (4.46-7.32)	**6.43** (4.87-8.67)	**7.04** (5.15-9.81)
2-day	**2.03** (1.79-2.33)	**2.65** (2.34-3.06)	**3.47** (3.06-4.02)	**4.15** (3.64-4.84)	**5.09** (4.31-6.13)	**5.82** (4.83-7.15)	**6.56** (5.32-8.26)	**7.34** (5.78-9.49)	**8.40** (6.36-11.3)	**9.23** (6.75-12.9)
3-day	**2.17** (1.92-2.50)	**2.88** (2.54-3.32)	**3.82** (3.37-4.42)	**4.60** (4.03-5.37)	**5.69** (4.82-6.86)	**6.55** (5.43-8.05)	**7.43** (6.02-9.36)	**8.35** (6.59-10.8)	**9.63** (7.29-13.0)	**10.6** (7.79-14.8)
4-day	**2.34** (2.07-2.70)	**3.12** (2.76-3.60)	**4.18** (3.69-4.83)	**5.06** (4.43-5.90)	**6.28** (5.32-7.57)	**7.25** (6.02-8.91)	**8.25** (6.69-10.4)	**9.31** (7.34-12.0)	**10.8** (8.15-14.5)	**11.9** (8.74-16.6)
7-day	**2.70** (2.39-3.11)	**3.64** (3.22-4.21)	**4.92** (4.34-5.69)	**5.98** (5.23-6.97)	**7.46** (6.32-8.98)	**8.62** (7.16-10.6)	**9.83** (7.97-12.4)	**11.1** (8.75-14.4)	**12.9** (9.74-17.3)	**14.3** (10.4-19.9)
10-day	**2.92** (2.59-3.37)	**3.97** (3.51-4.58)	**5.38** (4.75-6.23)	**6.56** (5.74-7.65)	**8.21** (6.95-9.89)	**9.50** (7.88-11.7)	**10.8** (8.79-13.7)	**12.3** (9.66-15.9)	**14.2** (10.8-19.2)	**15.8** (11.5-22.0)
20-day	**3.63** (3.22-4.19)	**4.99** (4.41-5.75)	**6.81** (6.01-7.88)	**8.34** (7.30-9.73)	**10.5** (8.87-12.6)	**12.2** (10.1-15.0)	**13.9** (11.3-17.5)	**15.8** (12.4-20.4)	**18.3** (13.9-24.7)	**20.4** (14.9-28.4)
30-day	**4.32** (3.82-4.97)	**5.92** (5.24-6.84)	**8.10** (7.15-9.37)	**9.92** (8.68-11.6)	**12.5** (10.6-15.0)	**14.5** (12.0-17.8)	**16.6** (13.5-20.9)	**18.8** (14.8-24.4)	**21.9** (16.6-29.5)	**24.4** (17.8-34.0)
45-day	**5.20** (4.61-5.99)	**7.10** (6.28-8.19)	**9.66** (8.52-11.2)	**11.8** (10.3-13.8)	**14.8** (12.6-17.9)	**17.2** (14.3-21.2)	**19.7** (16.0-24.9)	**22.4** (17.6-29.0)	**26.1** (19.7-35.1)	**29.0** (21.2-40.4)
60-day	**6.15** (5.45-7.09)	**8.31** (7.35-9.59)	**11.2** (9.91-13.0)	**13.7** (12.0-16.0)	**17.1** (14.5-20.7)	**19.9** (16.5-24.5)	**22.8** (18.4-28.7)	**25.8** (20.3-33.4)	**30.0** (22.7-40.5)	**33.4** (24.4-46.5)

[1] Precipitation frequency (PF) estimates in this table are based on frequency analysis of partial duration series (PDS).

Numbers in parenthesis are PF estimates at lower and upper bounds of the 90% confidence interval. The probability that precipitation frequency estimates (for a given duration and average recurrence interval) will be greater than the upper bound (or less than the lower bound) is 5%. Estimates at upper bounds are not checked against probable maximum precipitation (PMP) estimates and may be higher than currently valid PMP values.

Please refer to NOAA Atlas 14 document for more information.

Back to Top

PF graphical

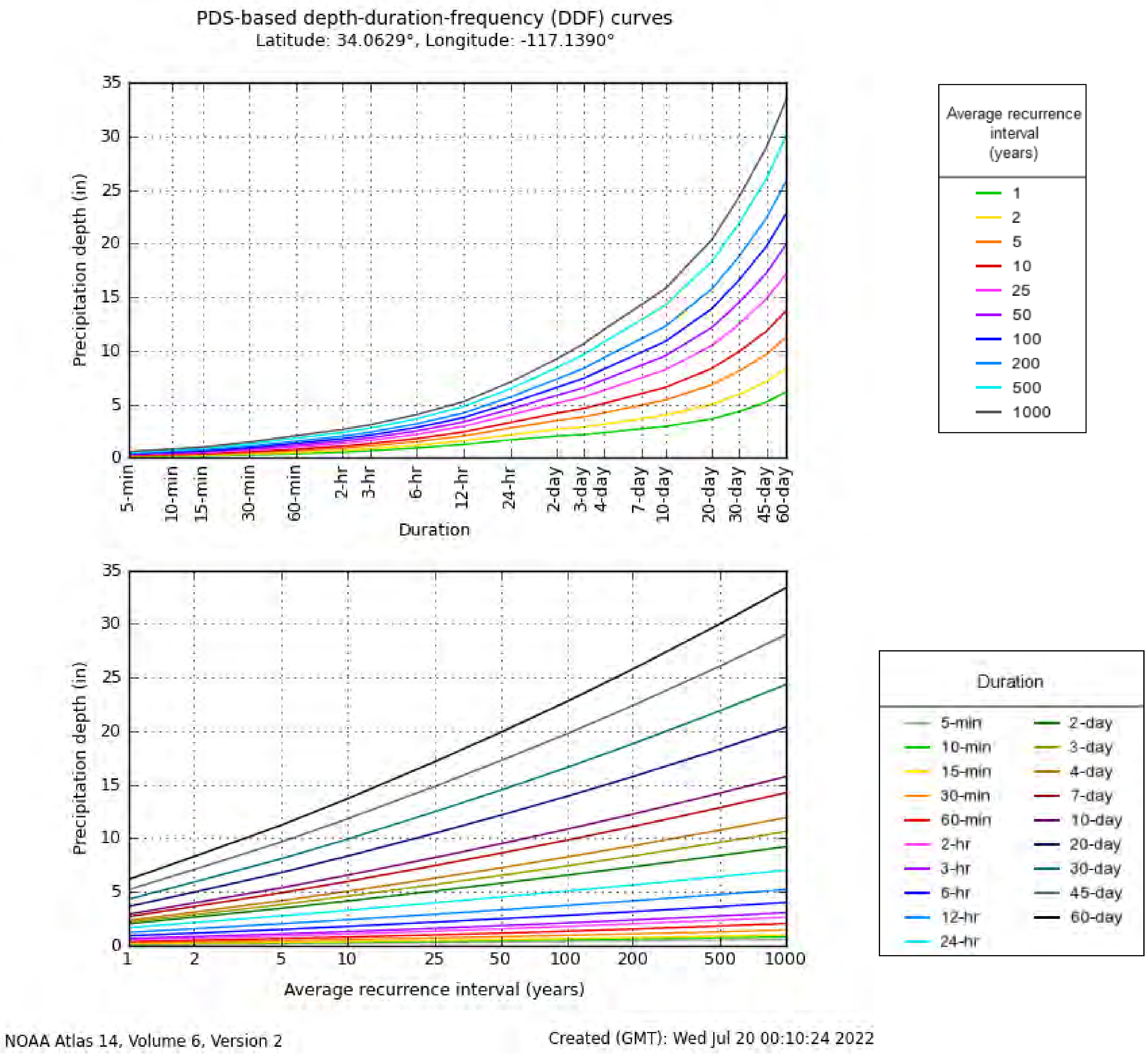

Back to Top

Maps & aerials

Small scale terrain

Large scale terrain

Large scale map

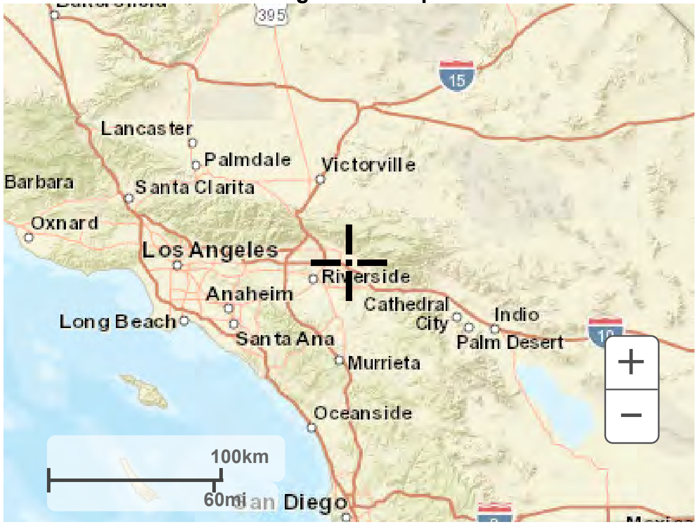

Large scale aerial

Back to Top

US Department of Commerce
National Oceanic and Atmospheric Administration
National Weather Service
National Water Center
1325 East West Highway
Silver Spring, MD 20910
Questions?: HDSC.Questions@noaa.gov

Disclaimer

APPENDICES

APPENDIX A: EXISTING RATIONAL METHOD, 2, 5, 10, 25 & 100 YEAR STORM FREQUENCY OUTPUT FILES.

```
****************************************************************************
             RATIONAL METHOD HYDROLOGY COMPUTER PROGRAM PACKAGE
          (Reference: 1986 SAN BERNARDINO CO. HYDROLOGY CRITERION)
         (c) Copyright 1983-2008 Advanced Engineering Software (aes)
             Ver. 15.0  Release Date: 04/01/2008  License ID 1420

                           Analysis prepared by:

                               CA Engineering
                         13821 Newport Ave., Ste 110
                              Tustin, Ca. 92780


 ************************** DESCRIPTION OF STUDY **************************
* EXISTING CONDITION                                                       *
* 2 YR STORM                                                               *
*                                                                          *
 **************************************************************************

  FILE NAME: 816-1EX.DAT
  TIME/DATE OF STUDY: 13:14 07/12/2022
============================================================================
  USER SPECIFIED HYDROLOGY AND HYDRAULIC MODEL INFORMATION:
============================================================================
                    --*TIME-OF-CONCENTRATION MODEL*--

  USER SPECIFIED STORM EVENT(YEAR) =    2.00
  SPECIFIED MINIMUM PIPE SIZE(INCH) =  12.00
  SPECIFIED PERCENT OF GRADIENTS(DECIMAL) TO USE FOR FRICTION SLOPE = 0.85
  *USER-DEFINED LOGARITHMIC INTERPOLATION USED FOR RAINFALL*
  10-YEAR STORM 60-MINUTE INTENSITY(INCH/HOUR) =  0.797
  100-YEAR STORM 60-MINUTE INTENSITY(INCH/HOUR) =  1.350
  COMPUTED RAINFALL INTENSITY DATA:
  STORM EVENT =    2.00   1-HOUR INTENSITY(INCH/HOUR) = 0.4105
  SLOPE OF INTENSITY DURATION CURVE = 0.6000

  *ANTECEDENT MOISTURE CONDITION (AMC) I ASSUMED FOR RATIONAL METHOD*

  *USER-DEFINED STREET-SECTIONS FOR COUPLED PIPEFLOW AND STREETFLOW MODEL*
     HALF-  CROWN TO   STREET-CROSSFALL:   CURB  GUTTER-GEOMETRIES:  MANNING
     WIDTH  CROSSFALL  IN-  / OUT-/PARK-  HEIGHT  WIDTH  LIP   HIKE  FACTOR
NO.   (FT)     (FT)    SIDE / SIDE/ WAY    (FT)    (FT)  (FT)  (FT)    (n)
===  =====  =========  ================  ======  ===== ====== ===== =======
  1   30.0     20.0    0.018/0.018/0.020   0.67    2.00 0.0313 0.167 0.0150

  GLOBAL STREET FLOW-DEPTH CONSTRAINTS:
    1. Relative Flow-Depth =  0.00 FEET
       as (Maximum Allowable Street Flow Depth) - (Top-of-Curb)
    2. (Depth)*(Velocity) Constraint =  6.0 (FT*FT/S)
  *SIZE PIPE WITH A FLOW CAPACITY GREATER THAN
   OR EQUAL TO THE UPSTREAM TRIBUTARY PIPE.*
  *USER-SPECIFIED MINIMUM TOPOGRAPHIC SLOPE ADJUSTMENT NOT SELECTED

****************************************************************************
  FLOW PROCESS FROM NODE      1.00 TO NODE      2.00 IS CODE =  21
----------------------------------------------------------------------------
  >>>>>RATIONAL METHOD INITIAL SUBAREA ANALYSIS<<<<<
  >>USE TIME-OF-CONCENTRATION NOMOGRAPH FOR INITIAL SUBAREA<<
```

```
============================================================================
  INITIAL SUBAREA FLOW-LENGTH(FEET) =   761.00
  ELEVATION DATA: UPSTREAM(FEET) =   1616.10  DOWNSTREAM(FEET) =   1602.40

  Tc = K*[(LENGTH** 3.00)/(ELEVATION CHANGE)]**0.20
  SUBAREA ANALYSIS USED MINIMUM Tc(MIN.) =   29.669
  *   2 YEAR RAINFALL INTENSITY(INCH/HR) =  0.626
  SUBAREA Tc AND LOSS RATE DATA(AMC  I ):
   DEVELOPMENT TYPE/      SCS SOIL   AREA      Fp         Ap     SCS   Tc
       LAND USE            GROUP   (ACRES)  (INCH/HR)  (DECIMAL)  CN  (MIN.)
  NATURAL GOOD COVER
  "GRASS"                    A        4.30      1.19     1.000    21   29.67
  NATURAL GOOD COVER
  "GRASS"                    B        1.20      0.90     1.000    41   29.67
  SUBAREA AVERAGE PERVIOUS LOSS RATE, Fp(INCH/HR) =  1.13
  SUBAREA AVERAGE PERVIOUS AREA FRACTION, Ap =  1.000
  * RAINFALL INTENSITY IS LESS THAN AREA-AVERAGED Fp;
  * IMPERVIOUS AREA USED FOR RUNOFF ESTIMATES.
  SUBAREA RUNOFF(CFS) =      0.00
  TOTAL AREA(ACRES) =      5.50   PEAK FLOW RATE(CFS) =      0.00
============================================================================
  END OF STUDY SUMMARY:
  TOTAL AREA(ACRES)     =        5.5  TC(MIN.) =     29.67
  EFFECTIVE AREA(ACRES) =      5.50  AREA-AVERAGED Fm(INCH/HR)=  1.13
  AREA-AVERAGED Fp(INCH/HR) =  1.13  AREA-AVERAGED Ap = 1.000
  PEAK FLOW RATE(CFS)   =       0.00
============================================================================
============================================================================
  END OF RATIONAL METHOD ANALYSIS
```

```
****************************************************************************
             RATIONAL METHOD HYDROLOGY COMPUTER PROGRAM PACKAGE
          (Reference: 1986 SAN BERNARDINO CO. HYDROLOGY CRITERION)
         (c) Copyright 1983-2008 Advanced Engineering Software (aes)
             Ver. 15.0  Release Date: 04/01/2008  License ID 1420

                           Analysis prepared by:

                               CA Engineering
                       13821 Newport Ave., Ste 110
                            Tustin, Ca. 92780


 ************************** DESCRIPTION OF STUDY **************************
 * EXISTING CONDITION                                                       *
 * 5 YR STORM                                                               *
 *                                                                          *
 **************************************************************************

  FILE NAME: 816-1EX.DAT
  TIME/DATE OF STUDY: 13:25 07/12/2022
============================================================================
  USER SPECIFIED HYDROLOGY AND HYDRAULIC MODEL INFORMATION:
============================================================================
                    --*TIME-OF-CONCENTRATION MODEL*--

  USER SPECIFIED STORM EVENT(YEAR) =    5.00
  SPECIFIED MINIMUM PIPE SIZE(INCH) =  12.00
  SPECIFIED PERCENT OF GRADIENTS(DECIMAL) TO USE FOR FRICTION SLOPE = 0.85
  *USER-DEFINED LOGARITHMIC INTERPOLATION USED FOR RAINFALL*
  10-YEAR STORM 60-MINUTE INTENSITY(INCH/HOUR) =  0.797
  100-YEAR STORM 60-MINUTE INTENSITY(INCH/HOUR) =  1.350
  COMPUTED RAINFALL INTENSITY DATA:
  STORM EVENT =    5.00   1-HOUR INTENSITY(INCH/HOUR) = 0.6465
  SLOPE OF INTENSITY DURATION CURVE = 0.6000

  *ANTECEDENT MOISTURE CONDITION (AMC) I ASSUMED FOR RATIONAL METHOD*

  *USER-DEFINED STREET-SECTIONS FOR COUPLED PIPEFLOW AND STREETFLOW MODEL*
     HALF-  CROWN TO   STREET-CROSSFALL:   CURB  GUTTER-GEOMETRIES:  MANNING
     WIDTH  CROSSFALL  IN-  / OUT-/PARK-  HEIGHT  WIDTH  LIP   HIKE  FACTOR
NO.   (FT)     (FT)    SIDE / SIDE/ WAY    (FT)    (FT)  (FT)  (FT)    (n)
===  =====  =========  =================  ======  ===== ====== ===== =======
  1   30.0     20.0    0.018/0.018/0.020   0.67    2.00 0.0313 0.167 0.0150

  GLOBAL STREET FLOW-DEPTH CONSTRAINTS:
    1. Relative Flow-Depth =  0.00 FEET
       as (Maximum Allowable Street Flow Depth) - (Top-of-Curb)
    2. (Depth)*(Velocity) Constraint =  6.0 (FT*FT/S)
  *SIZE PIPE WITH A FLOW CAPACITY GREATER THAN
   OR EQUAL TO THE UPSTREAM TRIBUTARY PIPE.*
  *USER-SPECIFIED MINIMUM TOPOGRAPHIC SLOPE ADJUSTMENT NOT SELECTED

****************************************************************************
  FLOW PROCESS FROM NODE      1.00 TO NODE      2.00 IS CODE =  21
----------------------------------------------------------------------------
  >>>>>RATIONAL METHOD INITIAL SUBAREA ANALYSIS<<<<<
  >>USE TIME-OF-CONCENTRATION NOMOGRAPH FOR INITIAL SUBAREA<<
============================================================================
  INITIAL SUBAREA FLOW-LENGTH(FEET) =   761.00
  ELEVATION DATA: UPSTREAM(FEET) =   1616.10  DOWNSTREAM(FEET) =   1602.40
```

```
  Tc = K*[(LENGTH** 3.00)/(ELEVATION CHANGE)]**0.20
  SUBAREA ANALYSIS USED MINIMUM Tc(MIN.) =   29.669
  *   5 YEAR RAINFALL INTENSITY(INCH/HR) =  0.987
  SUBAREA Tc AND LOSS RATE DATA(AMC  I ):
   DEVELOPMENT TYPE/      SCS SOIL   AREA      Fp         Ap     SCS   Tc
       LAND USE            GROUP   (ACRES)  (INCH/HR)  (DECIMAL)  CN  (MIN.)
  NATURAL GOOD COVER
  "GRASS"                    A        4.30      1.19     1.000    21   29.67
  NATURAL GOOD COVER
  "GRASS"                    B        1.20      0.90     1.000    41   29.67
  SUBAREA AVERAGE PERVIOUS LOSS RATE, Fp(INCH/HR) =  1.13
  SUBAREA AVERAGE PERVIOUS AREA FRACTION, Ap =  1.000
  * RAINFALL INTENSITY IS LESS THAN AREA-AVERAGED Fp;
  * IMPERVIOUS AREA USED FOR RUNOFF ESTIMATES.
  SUBAREA RUNOFF(CFS) =      0.00
  TOTAL AREA(ACRES) =      5.50   PEAK FLOW RATE(CFS) =      0.00

****************************************************************************
  FLOW PROCESS FROM NODE      2.00 TO NODE      3.00 IS CODE =  52
----------------------------------------------------------------------------
  ** WARNING: Computed Flowrate is less than 0.1 cfs,
              Routing Algorithm is UNAVAILABLE.
```

```
****************************************************************************
             RATIONAL METHOD HYDROLOGY COMPUTER PROGRAM PACKAGE
          (Reference: 1986 SAN BERNARDINO CO. HYDROLOGY CRITERION)
         (c) Copyright 1983-2008 Advanced Engineering Software (aes)
             Ver. 15.0  Release Date: 04/01/2008  License ID 1420

                           Analysis prepared by:

                               CA Engineering
                        13821 Newport Ave., Ste 110
                             Tustin, Ca. 92780


 ************************** DESCRIPTION OF STUDY **************************
* EXISTING CONDITION                                                       *
* 10 YR STORM                                                              *
*                                                                          *
 **************************************************************************

  FILE NAME: 816-1EX.DAT
  TIME/DATE OF STUDY: 13:24 07/12/2022
============================================================================
  USER SPECIFIED HYDROLOGY AND HYDRAULIC MODEL INFORMATION:
============================================================================
                    --*TIME-OF-CONCENTRATION MODEL*--

  USER SPECIFIED STORM EVENT(YEAR) =   10.00
  SPECIFIED MINIMUM PIPE SIZE(INCH) =  12.00
  SPECIFIED PERCENT OF GRADIENTS(DECIMAL) TO USE FOR FRICTION SLOPE = 0.85
  *USER-DEFINED LOGARITHMIC INTERPOLATION USED FOR RAINFALL*
  10-YEAR STORM 60-MINUTE INTENSITY(INCH/HOUR) =  0.797
  100-YEAR STORM 60-MINUTE INTENSITY(INCH/HOUR) =  1.350
  COMPUTED RAINFALL INTENSITY DATA:
  STORM EVENT =   10.00   1-HOUR INTENSITY(INCH/HOUR) = 0.8050
  SLOPE OF INTENSITY DURATION CURVE = 0.6000

  *ANTECEDENT MOISTURE CONDITION (AMC) II ASSUMED FOR RATIONAL METHOD*

  *USER-DEFINED STREET-SECTIONS FOR COUPLED PIPEFLOW AND STREETFLOW MODEL*
     HALF-  CROWN TO   STREET-CROSSFALL:   CURB  GUTTER-GEOMETRIES:  MANNING
     WIDTH  CROSSFALL  IN-  / OUT-/PARK-  HEIGHT  WIDTH  LIP   HIKE  FACTOR
NO.   (FT)     (FT)    SIDE / SIDE/ WAY    (FT)    (FT)  (FT)  (FT)    (n)
===  =====  =========  =================  ======  ===== ====== ===== =======
  1   30.0     20.0    0.018/0.018/0.020   0.67    2.00 0.0313 0.167 0.0150

  GLOBAL STREET FLOW-DEPTH CONSTRAINTS:
    1. Relative Flow-Depth =  0.00 FEET
       as (Maximum Allowable Street Flow Depth) - (Top-of-Curb)
    2. (Depth)*(Velocity) Constraint =  6.0 (FT*FT/S)
  *SIZE PIPE WITH A FLOW CAPACITY GREATER THAN
   OR EQUAL TO THE UPSTREAM TRIBUTARY PIPE.*
  *USER-SPECIFIED MINIMUM TOPOGRAPHIC SLOPE ADJUSTMENT NOT SELECTED

****************************************************************************
  FLOW PROCESS FROM NODE      1.00 TO NODE      2.00 IS CODE =  21
----------------------------------------------------------------------------
  >>>>>RATIONAL METHOD INITIAL SUBAREA ANALYSIS<<<<<
  >>USE TIME-OF-CONCENTRATION NOMOGRAPH FOR INITIAL SUBAREA<<
============================================================================
  INITIAL SUBAREA FLOW-LENGTH(FEET) =   761.00
  ELEVATION DATA: UPSTREAM(FEET) =   1616.10  DOWNSTREAM(FEET) =   1602.40
```

```
  Tc = K*[(LENGTH** 3.00)/(ELEVATION CHANGE)]**0.20
  SUBAREA ANALYSIS USED MINIMUM Tc(MIN.) =   29.669
  *  10 YEAR RAINFALL INTENSITY(INCH/HR) =  1.228
  SUBAREA Tc AND LOSS RATE DATA(AMC  II):
   DEVELOPMENT TYPE/      SCS SOIL   AREA      Fp         Ap     SCS   Tc
       LAND USE            GROUP   (ACRES)  (INCH/HR)  (DECIMAL)  CN  (MIN.)
  NATURAL GOOD COVER
  "GRASS"                    A        4.30      0.94     1.000    38   29.67
  NATURAL GOOD COVER
  "GRASS"                    B        1.20      0.69     1.000    61   29.67
  SUBAREA AVERAGE PERVIOUS LOSS RATE, Fp(INCH/HR) =  0.88
  SUBAREA AVERAGE PERVIOUS AREA FRACTION, Ap =  1.000
  SUBAREA RUNOFF(CFS) =      1.72
  TOTAL AREA(ACRES) =      5.50   PEAK FLOW RATE(CFS) =      1.72

****************************************************************************
  FLOW PROCESS FROM NODE      2.00 TO NODE      3.00 IS CODE =  52
----------------------------------------------------------------------------
  >>>>>COMPUTE NATURAL VALLEY CHANNEL FLOW<<<<<
  >>>>>TRAVELTIME THRU SUBAREA<<<<<
============================================================================
  ELEVATION DATA: UPSTREAM(FEET) =   1602.40  DOWNSTREAM(FEET) =   1600.10
  CHANNEL LENGTH THRU SUBAREA(FEET) =   330.00   CHANNEL SLOPE =  0.0070
  CHANNEL FLOW THRU SUBAREA(CFS) =       1.72
  FLOW VELOCITY(FEET/SEC) =   1.39 (PER LACFCD/RCFC&WCD HYDROLOGY MANUAL)
  TRAVEL TIME(MIN.) =   3.95   Tc(MIN.) =   33.62
  LONGEST FLOWPATH FROM NODE      1.00 TO NODE      3.00 =    1091.00 FEET.

****************************************************************************
  FLOW PROCESS FROM NODE      2.00 TO NODE      3.00 IS CODE =  81
----------------------------------------------------------------------------
  >>>>>ADDITION OF SUBAREA TO MAINLINE PEAK FLOW<<<<<
============================================================================
  MAINLINE Tc(MIN.) =   33.62
  *  10 YEAR RAINFALL INTENSITY(INCH/HR) =  1.140
  SUBAREA LOSS RATE DATA(AMC  II):
   DEVELOPMENT TYPE/      SCS SOIL   AREA      Fp         Ap     SCS
       LAND USE            GROUP   (ACRES)  (INCH/HR)  (DECIMAL)  CN
  NATURAL GOOD COVER
  "GRASS"                    A        0.20      0.94     1.000    38
  NATURAL GOOD COVER
  "GRASS"                    B        3.30      0.69     1.000    61
  SUBAREA AVERAGE PERVIOUS LOSS RATE, Fp(INCH/HR) =  0.70
  SUBAREA AVERAGE PERVIOUS AREA FRACTION, Ap =  1.000
  SUBAREA AREA(ACRES) =    3.50      SUBAREA RUNOFF(CFS) =    1.38
  EFFECTIVE AREA(ACRES) =      9.00   AREA-AVERAGED Fm(INCH/HR) =  0.81
  AREA-AVERAGED Fp(INCH/HR) =  0.81  AREA-AVERAGED Ap =  1.00
  TOTAL AREA(ACRES) =        9.0       PEAK FLOW RATE(CFS) =       2.66
============================================================================
  END OF STUDY SUMMARY:
  TOTAL AREA(ACRES)     =        9.0  TC(MIN.) =     33.62
  EFFECTIVE AREA(ACRES) =      9.00  AREA-AVERAGED Fm(INCH/HR)=  0.81
  AREA-AVERAGED Fp(INCH/HR) =  0.81  AREA-AVERAGED Ap = 1.000
  PEAK FLOW RATE(CFS)   =       2.66
============================================================================
============================================================================
  END OF RATIONAL METHOD ANALYSIS
```

```
****************************************************************************
             RATIONAL METHOD HYDROLOGY COMPUTER PROGRAM PACKAGE
          (Reference: 1986 SAN BERNARDINO CO. HYDROLOGY CRITERION)
         (c) Copyright 1983-2008 Advanced Engineering Software (aes)
             Ver. 15.0  Release Date: 04/01/2008  License ID 1420

                           Analysis prepared by:

                               CA Engineering
                        13821 Newport Ave., Ste 110
                             Tustin, Ca. 92780


 ************************** DESCRIPTION OF STUDY **************************
* EXISTING CONDITION                                                       *
* 25 YR STORM                                                              *
*                                                                          *
 ***************************************************************************

  FILE NAME: 816-1EX.DAT
  TIME/DATE OF STUDY: 13:22 07/12/2022
============================================================================
  USER SPECIFIED HYDROLOGY AND HYDRAULIC MODEL INFORMATION:
============================================================================
                    --*TIME-OF-CONCENTRATION MODEL*--

  USER SPECIFIED STORM EVENT(YEAR) =   25.00
  SPECIFIED MINIMUM PIPE SIZE(INCH) =  12.00
  SPECIFIED PERCENT OF GRADIENTS(DECIMAL) TO USE FOR FRICTION SLOPE = 0.85
  *USER-DEFINED LOGARITHMIC INTERPOLATION USED FOR RAINFALL*
  10-YEAR STORM 60-MINUTE INTENSITY(INCH/HOUR) =  0.797
  100-YEAR STORM 60-MINUTE INTENSITY(INCH/HOUR) =  1.350
  COMPUTED RAINFALL INTENSITY DATA:
  STORM EVENT =   25.00   1-HOUR INTENSITY(INCH/HOUR) = 0.9972
  SLOPE OF INTENSITY DURATION CURVE = 0.6000

  *ANTECEDENT MOISTURE CONDITION (AMC) II ASSUMED FOR RATIONAL METHOD*

  *USER-DEFINED STREET-SECTIONS FOR COUPLED PIPEFLOW AND STREETFLOW MODEL*
     HALF-  CROWN TO   STREET-CROSSFALL:   CURB  GUTTER-GEOMETRIES:  MANNING
     WIDTH  CROSSFALL  IN-  / OUT-/PARK-  HEIGHT  WIDTH  LIP   HIKE  FACTOR
NO.  (FT)      (FT)    SIDE / SIDE/ WAY    (FT)    (FT)  (FT)  (FT)    (n)
===  =====  =========  =================  ======  ===== ====== ===== =======
  1   30.0     20.0    0.018/0.018/0.020   0.67    2.00 0.0313 0.167 0.0150

  GLOBAL STREET FLOW-DEPTH CONSTRAINTS:
    1. Relative Flow-Depth =  0.00 FEET
       as (Maximum Allowable Street Flow Depth) - (Top-of-Curb)
    2. (Depth)*(Velocity) Constraint =  6.0 (FT*FT/S)
  *SIZE PIPE WITH A FLOW CAPACITY GREATER THAN
   OR EQUAL TO THE UPSTREAM TRIBUTARY PIPE.*
  *USER-SPECIFIED MINIMUM TOPOGRAPHIC SLOPE ADJUSTMENT NOT SELECTED

****************************************************************************
  FLOW PROCESS FROM NODE      1.00 TO NODE      2.00 IS CODE =  21
----------------------------------------------------------------------------
  >>>>>RATIONAL METHOD INITIAL SUBAREA ANALYSIS<<<<<
  >>USE TIME-OF-CONCENTRATION NOMOGRAPH FOR INITIAL SUBAREA<<
============================================================================
  INITIAL SUBAREA FLOW-LENGTH(FEET) =   761.00
  ELEVATION DATA: UPSTREAM(FEET) =   1616.10  DOWNSTREAM(FEET) =   1602.40
```

```
  Tc = K*[(LENGTH** 3.00)/(ELEVATION CHANGE)]**0.20
  SUBAREA ANALYSIS USED MINIMUM Tc(MIN.) =   29.669
  *  25 YEAR RAINFALL INTENSITY(INCH/HR) =  1.522
  SUBAREA Tc AND LOSS RATE DATA(AMC  II):
   DEVELOPMENT TYPE/      SCS SOIL   AREA      Fp         Ap     SCS   Tc
       LAND USE            GROUP   (ACRES)  (INCH/HR)  (DECIMAL)  CN  (MIN.)
  NATURAL GOOD COVER
  "GRASS"                   A        4.30      0.94     1.000    38   29.67
  NATURAL GOOD COVER
  "GRASS"                   B        1.20      0.69     1.000    61   29.67
  SUBAREA AVERAGE PERVIOUS LOSS RATE, Fp(INCH/HR) =  0.88
  SUBAREA AVERAGE PERVIOUS AREA FRACTION, Ap =  1.000
  SUBAREA RUNOFF(CFS) =      3.17
  TOTAL AREA(ACRES) =      5.50   PEAK FLOW RATE(CFS) =      3.17

****************************************************************************
  FLOW PROCESS FROM NODE      2.00 TO NODE      3.00 IS CODE =  52
----------------------------------------------------------------------------
  >>>>>COMPUTE NATURAL VALLEY CHANNEL FLOW<<<<<
  >>>>>TRAVELTIME THRU SUBAREA<<<<<
============================================================================
  ELEVATION DATA: UPSTREAM(FEET) =   1602.40  DOWNSTREAM(FEET) =   1600.10
  CHANNEL LENGTH THRU SUBAREA(FEET) =   330.00   CHANNEL SLOPE =  0.0070
  CHANNEL FLOW THRU SUBAREA(CFS) =       3.17
  FLOW VELOCITY(FEET/SEC) =   1.59 (PER LACFCD/RCFC&WCD HYDROLOGY MANUAL)
  TRAVEL TIME(MIN.) =   3.47   Tc(MIN.) =   33.14
  LONGEST FLOWPATH FROM NODE      1.00 TO NODE      3.00 =    1091.00 FEET.

****************************************************************************
  FLOW PROCESS FROM NODE      2.00 TO NODE      3.00 IS CODE =  81
----------------------------------------------------------------------------
  >>>>>ADDITION OF SUBAREA TO MAINLINE PEAK FLOW<<<<<
============================================================================
  MAINLINE Tc(MIN.) =   33.14
  *  25 YEAR RAINFALL INTENSITY(INCH/HR) =  1.424
  SUBAREA LOSS RATE DATA(AMC  II):
   DEVELOPMENT TYPE/      SCS SOIL   AREA      Fp         Ap     SCS
       LAND USE            GROUP   (ACRES)  (INCH/HR)  (DECIMAL)  CN
  NATURAL GOOD COVER
  "GRASS"                   A        0.20      0.94     1.000    38
  NATURAL GOOD COVER
  "GRASS"                   B        3.30      0.69     1.000    61
  SUBAREA AVERAGE PERVIOUS LOSS RATE, Fp(INCH/HR) =  0.70
  SUBAREA AVERAGE PERVIOUS AREA FRACTION, Ap =  1.000
  SUBAREA AREA(ACRES) =    3.50      SUBAREA RUNOFF(CFS) =    2.28
  EFFECTIVE AREA(ACRES) =      9.00   AREA-AVERAGED Fm(INCH/HR) =  0.81
  AREA-AVERAGED Fp(INCH/HR) =  0.81  AREA-AVERAGED Ap =  1.00
  TOTAL AREA(ACRES) =        9.0       PEAK FLOW RATE(CFS) =       4.96
============================================================================
  END OF STUDY SUMMARY:
  TOTAL AREA(ACRES)     =        9.0  TC(MIN.) =     33.14
  EFFECTIVE AREA(ACRES) =      9.00  AREA-AVERAGED Fm(INCH/HR)=  0.81
  AREA-AVERAGED Fp(INCH/HR) =  0.81  AREA-AVERAGED Ap = 1.000
  PEAK FLOW RATE(CFS)   =       4.96
============================================================================
============================================================================
  END OF RATIONAL METHOD ANALYSIS
```

```
****************************************************************************
             RATIONAL METHOD HYDROLOGY COMPUTER PROGRAM PACKAGE
          (Reference: 1986 SAN BERNARDINO CO. HYDROLOGY CRITERION)
         (c) Copyright 1983-2008 Advanced Engineering Software (aes)
             Ver. 15.0  Release Date: 04/01/2008  License ID 1420

                           Analysis prepared by:

                               CA Engineering
                        13821 Newport Ave., Ste 110
                             Tustin, Ca. 92780


 ************************** DESCRIPTION OF STUDY **************************
 * EXISTING CONDITION                                                       *
 * 100 YR STORM                                                             *
 *                                                                          *
 **************************************************************************

  FILE NAME: 816-1EX.DAT
  TIME/DATE OF STUDY: 13:20 07/12/2022
============================================================================
  USER SPECIFIED HYDROLOGY AND HYDRAULIC MODEL INFORMATION:
============================================================================
                    --*TIME-OF-CONCENTRATION MODEL*--

  USER SPECIFIED STORM EVENT(YEAR) =  100.00
  SPECIFIED MINIMUM PIPE SIZE(INCH) =  12.00
  SPECIFIED PERCENT OF GRADIENTS(DECIMAL) TO USE FOR FRICTION SLOPE = 0.85
  *USER-DEFINED LOGARITHMIC INTERPOLATION USED FOR RAINFALL*
  10-YEAR STORM 60-MINUTE INTENSITY(INCH/HOUR) =  0.797
  100-YEAR STORM 60-MINUTE INTENSITY(INCH/HOUR) =  1.350
  COMPUTED RAINFALL INTENSITY DATA:
  STORM EVENT =  100.00   1-HOUR INTENSITY(INCH/HOUR) = 1.3500
  SLOPE OF INTENSITY DURATION CURVE = 0.6000

  *ANTECEDENT MOISTURE CONDITION (AMC) III ASSUMED FOR RATIONAL METHOD*

  *USER-DEFINED STREET-SECTIONS FOR COUPLED PIPEFLOW AND STREETFLOW MODEL*
     HALF-  CROWN TO   STREET-CROSSFALL:   CURB  GUTTER-GEOMETRIES:  MANNING
     WIDTH  CROSSFALL  IN-  / OUT-/PARK-  HEIGHT  WIDTH  LIP   HIKE  FACTOR
NO.   (FT)     (FT)    SIDE / SIDE/ WAY    (FT)    (FT)  (FT)  (FT)    (n)
===  =====  =========  =================  ======  ===== ====== ===== =======
  1   30.0     20.0    0.018/0.018/0.020   0.67    2.00 0.0313 0.167 0.0150

  GLOBAL STREET FLOW-DEPTH CONSTRAINTS:
    1. Relative Flow-Depth =  0.00 FEET
       as (Maximum Allowable Street Flow Depth) - (Top-of-Curb)
    2. (Depth)*(Velocity) Constraint =  6.0 (FT*FT/S)
  *SIZE PIPE WITH A FLOW CAPACITY GREATER THAN
   OR EQUAL TO THE UPSTREAM TRIBUTARY PIPE.*
  *USER-SPECIFIED MINIMUM TOPOGRAPHIC SLOPE ADJUSTMENT NOT SELECTED

****************************************************************************
  FLOW PROCESS FROM NODE      1.00 TO NODE      2.00 IS CODE =  21
----------------------------------------------------------------------------
  >>>>>RATIONAL METHOD INITIAL SUBAREA ANALYSIS<<<<<
  >>USE TIME-OF-CONCENTRATION NOMOGRAPH FOR INITIAL SUBAREA<<
============================================================================
  INITIAL SUBAREA FLOW-LENGTH(FEET) =   761.00
  ELEVATION DATA: UPSTREAM(FEET) =   1616.10  DOWNSTREAM(FEET) =   1602.40
```

```
  Tc = K*[(LENGTH** 3.00)/(ELEVATION CHANGE)]**0.20
  SUBAREA ANALYSIS USED MINIMUM Tc(MIN.) =   29.669
  * 100 YEAR RAINFALL INTENSITY(INCH/HR) =  2.060
  SUBAREA Tc AND LOSS RATE DATA(AMC III):
   DEVELOPMENT TYPE/      SCS SOIL   AREA      Fp         Ap     SCS   Tc
       LAND USE            GROUP   (ACRES)  (INCH/HR)  (DECIMAL)  CN  (MIN.)
  NATURAL GOOD COVER
  "GRASS"                    A        4.30      0.66     1.000    58   29.67
  NATURAL GOOD COVER
  "GRASS"                    B        1.20      0.36     1.000    80   29.67
  SUBAREA AVERAGE PERVIOUS LOSS RATE, Fp(INCH/HR) =  0.59
  SUBAREA AVERAGE PERVIOUS AREA FRACTION, Ap =  1.000
  SUBAREA RUNOFF(CFS) =      7.26
  TOTAL AREA(ACRES) =      5.50   PEAK FLOW RATE(CFS) =      7.26

****************************************************************************
  FLOW PROCESS FROM NODE      2.00 TO NODE      3.00 IS CODE =  52
----------------------------------------------------------------------------
  >>>>>COMPUTE NATURAL VALLEY CHANNEL FLOW<<<<<
  >>>>>TRAVELTIME THRU SUBAREA<<<<<
============================================================================
  ELEVATION DATA: UPSTREAM(FEET) =   1602.40  DOWNSTREAM(FEET) =   1600.10
  CHANNEL LENGTH THRU SUBAREA(FEET) =   330.00   CHANNEL SLOPE =  0.0070
  CHANNEL FLOW THRU SUBAREA(CFS) =       7.26
  FLOW VELOCITY(FEET/SEC) =   1.93 (PER LACFCD/RCFC&WCD HYDROLOGY MANUAL)
  TRAVEL TIME(MIN.) =   2.86   Tc(MIN.) =   32.52
  LONGEST FLOWPATH FROM NODE      1.00 TO NODE      3.00 =    1091.00 FEET.

****************************************************************************
  FLOW PROCESS FROM NODE      2.00 TO NODE      3.00 IS CODE =  81
----------------------------------------------------------------------------
  >>>>>ADDITION OF SUBAREA TO MAINLINE PEAK FLOW<<<<<
============================================================================
  MAINLINE Tc(MIN.) =   32.52
  * 100 YEAR RAINFALL INTENSITY(INCH/HR) =  1.949
  SUBAREA LOSS RATE DATA(AMC III):
   DEVELOPMENT TYPE/      SCS SOIL   AREA      Fp         Ap     SCS
       LAND USE            GROUP   (ACRES)  (INCH/HR)  (DECIMAL)  CN
  NATURAL GOOD COVER
  "GRASS"                    A        0.20      0.66     1.000    58
  NATURAL GOOD COVER
  "GRASS"                    B        3.30      0.36     1.000    80
  SUBAREA AVERAGE PERVIOUS LOSS RATE, Fp(INCH/HR) =  0.38
  SUBAREA AVERAGE PERVIOUS AREA FRACTION, Ap =  1.000
  SUBAREA AREA(ACRES) =    3.50      SUBAREA RUNOFF(CFS) =    4.94
  EFFECTIVE AREA(ACRES) =      9.00   AREA-AVERAGED Fm(INCH/HR) =  0.51
  AREA-AVERAGED Fp(INCH/HR) =  0.51  AREA-AVERAGED Ap =  1.00
  TOTAL AREA(ACRES) =        9.0       PEAK FLOW RATE(CFS) =      11.65
============================================================================
  END OF STUDY SUMMARY:
  TOTAL AREA(ACRES)     =        9.0  TC(MIN.) =     32.52
  EFFECTIVE AREA(ACRES) =      9.00  AREA-AVERAGED Fm(INCH/HR)=  0.51
  AREA-AVERAGED Fp(INCH/HR) =  0.51  AREA-AVERAGED Ap = 1.000
  PEAK FLOW RATE(CFS)   =      11.65
============================================================================
============================================================================
  END OF RATIONAL METHOD ANALYSIS
```

APPENDIX B: PROPOSED RATIONAL METHOD, 2, 5, 10, 25 & 100 YEAR STORM FREQUENCY OUTPUT FILES.

```
****************************************************************************
             RATIONAL METHOD HYDROLOGY COMPUTER PROGRAM PACKAGE
         (Reference: 1986 SAN BERNARDINO CO. HYDROLOGY CRITERION)
         (c) Copyright 1983-2008 Advanced Engineering Software (aes)
             Ver. 15.0  Release Date: 04/01/2008  License ID 1420

                           Analysis prepared by:

                               CA Engineering
                        13821 Newport Ave., Ste 110
                             Tustin, Ca. 92780


 ************************** DESCRIPTION OF STUDY **************************
* PROPOSED CONDITION                                                       *
* 2 YR STORM                                                               *
*                                                                          *
 **************************************************************************

  FILE NAME: 816-1PR.DAT
  TIME/DATE OF STUDY: 08:47 07/13/2022
============================================================================
  USER SPECIFIED HYDROLOGY AND HYDRAULIC MODEL INFORMATION:
============================================================================
                    --*TIME-OF-CONCENTRATION MODEL*--

  USER SPECIFIED STORM EVENT(YEAR) =    2.00
  SPECIFIED MINIMUM PIPE SIZE(INCH) =  12.00
  SPECIFIED PERCENT OF GRADIENTS(DECIMAL) TO USE FOR FRICTION SLOPE = 0.85
  *USER-DEFINED LOGARITHMIC INTERPOLATION USED FOR RAINFALL*
  10-YEAR STORM 60-MINUTE INTENSITY(INCH/HOUR) =  0.797
  100-YEAR STORM 60-MINUTE INTENSITY(INCH/HOUR) =  1.350
  COMPUTED RAINFALL INTENSITY DATA:
  STORM EVENT =    2.00   1-HOUR INTENSITY(INCH/HOUR) = 0.4105
  SLOPE OF INTENSITY DURATION CURVE = 0.6000

  *ANTECEDENT MOISTURE CONDITION (AMC) I ASSUMED FOR RATIONAL METHOD*

  *USER-DEFINED STREET-SECTIONS FOR COUPLED PIPEFLOW AND STREETFLOW MODEL*
     HALF-  CROWN TO   STREET-CROSSFALL:   CURB  GUTTER-GEOMETRIES:  MANNING
     WIDTH  CROSSFALL  IN-  / OUT-/PARK-  HEIGHT  WIDTH  LIP   HIKE  FACTOR
NO.   (FT)     (FT)    SIDE / SIDE/ WAY    (FT)    (FT)  (FT)  (FT)    (n)
===  =====  =========  =================  ======  ===== ====== ===== =======
  1   30.0     20.0    0.018/0.018/0.020   0.67    2.00 0.0313 0.167 0.0150

  GLOBAL STREET FLOW-DEPTH CONSTRAINTS:
    1. Relative Flow-Depth =  0.00 FEET
       as (Maximum Allowable Street Flow Depth) - (Top-of-Curb)
    2. (Depth)*(Velocity) Constraint =  6.0 (FT*FT/S)
  *SIZE PIPE WITH A FLOW CAPACITY GREATER THAN
   OR EQUAL TO THE UPSTREAM TRIBUTARY PIPE.*
  *USER-SPECIFIED MINIMUM TOPOGRAPHIC SLOPE ADJUSTMENT NOT SELECTED

****************************************************************************
  FLOW PROCESS FROM NODE      1.00 TO NODE      2.00 IS CODE =  21
```

```
----------------------------------------------------------------------------
  >>>>>RATIONAL METHOD INITIAL SUBAREA ANALYSIS<<<<<
  >>USE TIME-OF-CONCENTRATION NOMOGRAPH FOR INITIAL SUBAREA<<
============================================================================
  INITIAL SUBAREA FLOW-LENGTH(FEET) =   485.00
  ELEVATION DATA: UPSTREAM(FEET) =   1616.10  DOWNSTREAM(FEET) =   1603.80

  Tc = K*[(LENGTH** 3.00)/(ELEVATION CHANGE)]**0.20
  SUBAREA ANALYSIS USED MINIMUM Tc(MIN.) =    8.017
  *   2 YEAR RAINFALL INTENSITY(INCH/HR) =  1.373
  SUBAREA Tc AND LOSS RATE DATA(AMC  I ):
   DEVELOPMENT TYPE/      SCS SOIL   AREA      Fp         Ap     SCS   Tc
       LAND USE            GROUP   (ACRES)  (INCH/HR)  (DECIMAL)  CN  (MIN.)
  RESIDENTIAL
  "11+ DWELLINGS/ACRE"       A        2.11      1.33     0.200    17    8.02
  RESIDENTIAL
  "11+ DWELLINGS/ACRE"       B        0.17      0.94     0.200    36    8.02
  SUBAREA AVERAGE PERVIOUS LOSS RATE, Fp(INCH/HR) =  1.30
  SUBAREA AVERAGE PERVIOUS AREA FRACTION, Ap =  0.200
  SUBAREA RUNOFF(CFS) =      2.28
  TOTAL AREA(ACRES) =      2.28   PEAK FLOW RATE(CFS) =      2.28

****************************************************************************
  FLOW PROCESS FROM NODE      2.00 TO NODE      3.00 IS CODE =  31
----------------------------------------------------------------------------
  >>>>>COMPUTE PIPE-FLOW TRAVEL TIME THRU SUBAREA<<<<<
  >>>>>USING COMPUTER-ESTIMATED PIPESIZE (NON-PRESSURE FLOW)<<<<<
============================================================================
  ELEVATION DATA: UPSTREAM(FEET) =  1596.50  DOWNSTREAM(FEET) =  1596.00
  FLOW LENGTH(FEET) =    44.00   MANNING'S N =  0.013
  DEPTH OF FLOW IN  12.0 INCH PIPE IS   7.1 INCHES
  PIPE-FLOW VELOCITY(FEET/SEC.) =   4.75
  ESTIMATED PIPE DIAMETER(INCH) =  12.00    NUMBER OF PIPES =   1
  PIPE-FLOW(CFS) =       2.28
  PIPE TRAVEL TIME(MIN.) =   0.15    Tc(MIN.) =    8.17
  LONGEST FLOWPATH FROM NODE      1.00 TO NODE      3.00 =     529.00 FEET.

****************************************************************************
  FLOW PROCESS FROM NODE      3.00 TO NODE      3.00 IS CODE =   1
----------------------------------------------------------------------------
  >>>>>DESIGNATE INDEPENDENT STREAM FOR CONFLUENCE<<<<<
============================================================================
  TOTAL NUMBER OF STREAMS =  2
  CONFLUENCE VALUES USED FOR INDEPENDENT STREAM  1 ARE:
  TIME OF CONCENTRATION(MIN.) =    8.17
  RAINFALL INTENSITY(INCH/HR) =   1.36
  AREA-AVERAGED Fm(INCH/HR) =  0.26
  AREA-AVERAGED Fp(INCH/HR) =  1.30
  AREA-AVERAGED Ap =  0.20
  EFFECTIVE STREAM AREA(ACRES) =       2.28
  TOTAL STREAM AREA(ACRES) =       2.28
  PEAK FLOW RATE(CFS) AT CONFLUENCE =       2.28

****************************************************************************
  FLOW PROCESS FROM NODE      4.00 TO NODE      5.00 IS CODE =  21
----------------------------------------------------------------------------
  >>>>>RATIONAL METHOD INITIAL SUBAREA ANALYSIS<<<<<
  >>USE TIME-OF-CONCENTRATION NOMOGRAPH FOR INITIAL SUBAREA<<
============================================================================
  INITIAL SUBAREA FLOW-LENGTH(FEET) =   363.00
  ELEVATION DATA: UPSTREAM(FEET) =   1604.30  DOWNSTREAM(FEET) =   1602.50

  Tc = K*[(LENGTH** 3.00)/(ELEVATION CHANGE)]**0.20
```

```
  SUBAREA ANALYSIS USED MINIMUM Tc(MIN.) =    9.895
  *   2 YEAR RAINFALL INTENSITY(INCH/HR) =  1.210
  SUBAREA Tc AND LOSS RATE DATA(AMC  I ):
   DEVELOPMENT TYPE/      SCS SOIL   AREA      Fp         Ap     SCS   Tc
       LAND USE            GROUP   (ACRES)  (INCH/HR)  (DECIMAL)  CN  (MIN.)
  RESIDENTIAL
  "11+ DWELLINGS/ACRE"       A        1.55      1.33     0.200    17    9.90
  SUBAREA AVERAGE PERVIOUS LOSS RATE, Fp(INCH/HR) =  1.33
  SUBAREA AVERAGE PERVIOUS AREA FRACTION, Ap =  0.200
  * RAINFALL INTENSITY IS LESS THAN AREA-AVERAGED Fp;
  * IMPERVIOUS AREA USED FOR RUNOFF ESTIMATES.
  SUBAREA RUNOFF(CFS) =      1.35
  TOTAL AREA(ACRES) =      1.55   PEAK FLOW RATE(CFS) =      1.35

****************************************************************************
  FLOW PROCESS FROM NODE      5.00 TO NODE      3.00 IS CODE =  31
----------------------------------------------------------------------------
  >>>>>COMPUTE PIPE-FLOW TRAVEL TIME THRU SUBAREA<<<<<
  >>>>>USING COMPUTER-ESTIMATED PIPESIZE (NON-PRESSURE FLOW)<<<<<
============================================================================
  ELEVATION DATA: UPSTREAM(FEET) =  1596.50  DOWNSTREAM(FEET) =  1596.00
  FLOW LENGTH(FEET) =    32.00   MANNING'S N =  0.013
  ESTIMATED PIPE DIAMETER(INCH) INCREASED TO 12.000
  DEPTH OF FLOW IN  12.0 INCH PIPE IS   4.7 INCHES
  PIPE-FLOW VELOCITY(FEET/SEC.) =   4.69
  ESTIMATED PIPE DIAMETER(INCH) =  12.00    NUMBER OF PIPES =   1
  PIPE-FLOW(CFS) =       1.35
  PIPE TRAVEL TIME(MIN.) =   0.11    Tc(MIN.) =   10.01
  LONGEST FLOWPATH FROM NODE      4.00 TO NODE      3.00 =     395.00 FEET.

****************************************************************************
  FLOW PROCESS FROM NODE      3.00 TO NODE      3.00 IS CODE =   1
----------------------------------------------------------------------------
  >>>>>DESIGNATE INDEPENDENT STREAM FOR CONFLUENCE<<<<<
  >>>>>AND COMPUTE VARIOUS CONFLUENCED STREAM VALUES<<<<<
============================================================================
  TOTAL NUMBER OF STREAMS =  2
  CONFLUENCE VALUES USED FOR INDEPENDENT STREAM  2 ARE:
  TIME OF CONCENTRATION(MIN.) =   10.01
  RAINFALL INTENSITY(INCH/HR) =   1.20
  AREA-AVERAGED Fm(INCH/HR) =  0.27
  AREA-AVERAGED Fp(INCH/HR) =  1.33
  AREA-AVERAGED Ap =  0.20
  EFFECTIVE STREAM AREA(ACRES) =       1.55
  TOTAL STREAM AREA(ACRES) =       1.55
  PEAK FLOW RATE(CFS) AT CONFLUENCE =       1.35

  ** CONFLUENCE DATA **
   STREAM       Q      Tc   Intensity   Fp(Fm)     Ap     Ae     HEADWATER
   NUMBER     (CFS)  (MIN.) (INCH/HR) (INCH/HR)         (ACRES)    NODE
      1        2.28    8.17    1.358  1.30( 0.26) 0.20       2.3       1.00
      2        1.35   10.01    1.202  1.33( 0.27) 0.20       1.5       4.00

  RAINFALL INTENSITY AND TIME OF CONCENTRATION RATIO
  CONFLUENCE FORMULA USED FOR  2 STREAMS.

  ** PEAK FLOW RATE TABLE **
   STREAM       Q      Tc   Intensity   Fp(Fm)     Ap     Ae     HEADWATER
   NUMBER     (CFS)  (MIN.) (INCH/HR) (INCH/HR)         (ACRES)    NODE
      1        3.54    8.17    1.358  1.31( 0.26) 0.20       3.5       1.00
      2        3.35   10.01    1.202  1.31( 0.26) 0.20       3.8       4.00

  COMPUTED CONFLUENCE ESTIMATES ARE AS FOLLOWS:
```

```
  PEAK FLOW RATE(CFS) =       3.54    Tc(MIN.) =     8.17
  EFFECTIVE AREA(ACRES) =       3.55   AREA-AVERAGED Fm(INCH/HR) =  0.26
  AREA-AVERAGED Fp(INCH/HR) =  1.31  AREA-AVERAGED Ap =  0.20
  TOTAL AREA(ACRES) =        3.8
  LONGEST FLOWPATH FROM NODE      1.00 TO NODE      3.00 =     529.00 FEET.

****************************************************************************
  FLOW PROCESS FROM NODE      3.00 TO NODE      3.00 IS CODE =  31
----------------------------------------------------------------------------
  >>>>>COMPUTE PIPE-FLOW TRAVEL TIME THRU SUBAREA<<<<<
  >>>>>USING COMPUTER-ESTIMATED PIPESIZE (NON-PRESSURE FLOW)<<<<<
============================================================================
  ELEVATION DATA: UPSTREAM(FEET) =  1596.20  DOWNSTREAM(FEET) =  1596.00
  FLOW LENGTH(FEET) =   150.00   MANNING'S N =  0.013
  DEPTH OF FLOW IN  21.0 INCH PIPE IS  12.5 INCHES
  PIPE-FLOW VELOCITY(FEET/SEC.) =   2.37
  ESTIMATED PIPE DIAMETER(INCH) =  21.00    NUMBER OF PIPES =   1
  PIPE-FLOW(CFS) =       3.54
  PIPE TRAVEL TIME(MIN.) =   1.05    Tc(MIN.) =    9.23
  LONGEST FLOWPATH FROM NODE      1.00 TO NODE      3.00 =     679.00 FEET.

****************************************************************************
  FLOW PROCESS FROM NODE      3.00 TO NODE      3.00 IS CODE =  10
----------------------------------------------------------------------------
  >>>>>MAIN-STREAM MEMORY COPIED ONTO MEMORY BANK # 1 <<<<<
============================================================================

****************************************************************************
  FLOW PROCESS FROM NODE      6.00 TO NODE      7.00 IS CODE =  21
----------------------------------------------------------------------------
  >>>>>RATIONAL METHOD INITIAL SUBAREA ANALYSIS<<<<<
  >>USE TIME-OF-CONCENTRATION NOMOGRAPH FOR INITIAL SUBAREA<<
============================================================================
  INITIAL SUBAREA FLOW-LENGTH(FEET) =   496.00
  ELEVATION DATA: UPSTREAM(FEET) =   1615.00  DOWNSTREAM(FEET) =   1603.60

  Tc = K*[(LENGTH** 3.00)/(ELEVATION CHANGE)]**0.20
  SUBAREA ANALYSIS USED MINIMUM Tc(MIN.) =    8.250
  *   2 YEAR RAINFALL INTENSITY(INCH/HR) =  1.350
  SUBAREA Tc AND LOSS RATE DATA(AMC  I ):
   DEVELOPMENT TYPE/      SCS SOIL   AREA      Fp         Ap     SCS   Tc
       LAND USE            GROUP   (ACRES)  (INCH/HR)  (DECIMAL)  CN  (MIN.)
  RESIDENTIAL
  "11+ DWELLINGS/ACRE"       A        0.14      1.33     0.200    17    8.25
  RESIDENTIAL
  "11+ DWELLINGS/ACRE"       B        2.70      0.94     0.200    36    8.25
  SUBAREA AVERAGE PERVIOUS LOSS RATE, Fp(INCH/HR) =  0.96
  SUBAREA AVERAGE PERVIOUS AREA FRACTION, Ap =  0.200
  SUBAREA RUNOFF(CFS) =      2.96
  TOTAL AREA(ACRES) =      2.84   PEAK FLOW RATE(CFS) =      2.96

****************************************************************************
  FLOW PROCESS FROM NODE      7.00 TO NODE      8.00 IS CODE =  31
----------------------------------------------------------------------------
  >>>>>COMPUTE PIPE-FLOW TRAVEL TIME THRU SUBAREA<<<<<
  >>>>>USING COMPUTER-ESTIMATED PIPESIZE (NON-PRESSURE FLOW)<<<<<
============================================================================
  ELEVATION DATA: UPSTREAM(FEET) =  1597.30  DOWNSTREAM(FEET) =  1597.00
  FLOW LENGTH(FEET) =    26.00   MANNING'S N =  0.013
  DEPTH OF FLOW IN  12.0 INCH PIPE IS   8.4 INCHES
  PIPE-FLOW VELOCITY(FEET/SEC.) =   5.03
  ESTIMATED PIPE DIAMETER(INCH) =  12.00    NUMBER OF PIPES =   1
  PIPE-FLOW(CFS) =       2.96
```

```
  PIPE TRAVEL TIME(MIN.) =   0.09    Tc(MIN.) =    8.34
  LONGEST FLOWPATH FROM NODE      6.00 TO NODE      8.00 =     522.00 FEET.

****************************************************************************
  FLOW PROCESS FROM NODE      8.00 TO NODE      8.00 IS CODE =   1
----------------------------------------------------------------------------
  >>>>>DESIGNATE INDEPENDENT STREAM FOR CONFLUENCE<<<<<
============================================================================
  TOTAL NUMBER OF STREAMS =  2
  CONFLUENCE VALUES USED FOR INDEPENDENT STREAM  1 ARE:
  TIME OF CONCENTRATION(MIN.) =    8.34
  RAINFALL INTENSITY(INCH/HR) =   1.34
  AREA-AVERAGED Fm(INCH/HR) =  0.19
  AREA-AVERAGED Fp(INCH/HR) =  0.96
  AREA-AVERAGED Ap =  0.20
  EFFECTIVE STREAM AREA(ACRES) =       2.84
  TOTAL STREAM AREA(ACRES) =       2.84
  PEAK FLOW RATE(CFS) AT CONFLUENCE =       2.96

****************************************************************************
  FLOW PROCESS FROM NODE      9.00 TO NODE     10.00 IS CODE =  21
----------------------------------------------------------------------------
  >>>>>RATIONAL METHOD INITIAL SUBAREA ANALYSIS<<<<<
  >>USE TIME-OF-CONCENTRATION NOMOGRAPH FOR INITIAL SUBAREA<<
============================================================================
  INITIAL SUBAREA FLOW-LENGTH(FEET) =   444.00
  ELEVATION DATA: UPSTREAM(FEET) =   1603.50  DOWNSTREAM(FEET) =   1601.30

  Tc = K*[(LENGTH** 3.00)/(ELEVATION CHANGE)]**0.20
  SUBAREA ANALYSIS USED MINIMUM Tc(MIN.) =   10.727
  *   2 YEAR RAINFALL INTENSITY(INCH/HR) =  1.153
  SUBAREA Tc AND LOSS RATE DATA(AMC  I ):
   DEVELOPMENT TYPE/      SCS SOIL   AREA      Fp         Ap     SCS   Tc
       LAND USE            GROUP   (ACRES)  (INCH/HR)  (DECIMAL)  CN  (MIN.)
  RESIDENTIAL
  "11+ DWELLINGS/ACRE"       A        0.78      1.33     0.200    17   10.73
  RESIDENTIAL
  "11+ DWELLINGS/ACRE"       B        1.22      0.94     0.200    36   10.73
  SUBAREA AVERAGE PERVIOUS LOSS RATE, Fp(INCH/HR) =  1.09
  SUBAREA AVERAGE PERVIOUS AREA FRACTION, Ap =  0.200
  SUBAREA RUNOFF(CFS) =      1.68
  TOTAL AREA(ACRES) =      2.00   PEAK FLOW RATE(CFS) =      1.68

****************************************************************************
  FLOW PROCESS FROM NODE     10.00 TO NODE      8.00 IS CODE =  31
----------------------------------------------------------------------------
  >>>>>COMPUTE PIPE-FLOW TRAVEL TIME THRU SUBAREA<<<<<
  >>>>>USING COMPUTER-ESTIMATED PIPESIZE (NON-PRESSURE FLOW)<<<<<
============================================================================
  ELEVATION DATA: UPSTREAM(FEET) =  1597.80  DOWNSTREAM(FEET) =  1597.00
  FLOW LENGTH(FEET) =   165.00   MANNING'S N =  0.013
  DEPTH OF FLOW IN  12.0 INCH PIPE IS   7.6 INCHES
  PIPE-FLOW VELOCITY(FEET/SEC.) =   3.19
  ESTIMATED PIPE DIAMETER(INCH) =  12.00    NUMBER OF PIPES =   1
  PIPE-FLOW(CFS) =       1.68
  PIPE TRAVEL TIME(MIN.) =   0.86    Tc(MIN.) =   11.59
  LONGEST FLOWPATH FROM NODE      9.00 TO NODE      8.00 =     609.00 FEET.

****************************************************************************
  FLOW PROCESS FROM NODE      8.00 TO NODE      8.00 IS CODE =   1
----------------------------------------------------------------------------
  >>>>>DESIGNATE INDEPENDENT STREAM FOR CONFLUENCE<<<<<
  >>>>>AND COMPUTE VARIOUS CONFLUENCED STREAM VALUES<<<<<
```

```
============================================================================
  TOTAL NUMBER OF STREAMS =  2
  CONFLUENCE VALUES USED FOR INDEPENDENT STREAM  2 ARE:
  TIME OF CONCENTRATION(MIN.) =   11.59
  RAINFALL INTENSITY(INCH/HR) =   1.10
  AREA-AVERAGED Fm(INCH/HR) =  0.22
  AREA-AVERAGED Fp(INCH/HR) =  1.09
  AREA-AVERAGED Ap =  0.20
  EFFECTIVE STREAM AREA(ACRES) =       2.00
  TOTAL STREAM AREA(ACRES) =       2.00
  PEAK FLOW RATE(CFS) AT CONFLUENCE =       1.68

  ** CONFLUENCE DATA **
   STREAM       Q      Tc   Intensity   Fp(Fm)     Ap     Ae     HEADWATER
   NUMBER     (CFS)  (MIN.) (INCH/HR) (INCH/HR)         (ACRES)    NODE
      1        2.96    8.34    1.342  0.96( 0.19) 0.20       2.8       6.00
      2        1.68   11.59    1.101  1.09( 0.22) 0.20       2.0       9.00

  RAINFALL INTENSITY AND TIME OF CONCENTRATION RATIO
  CONFLUENCE FORMULA USED FOR  2 STREAMS.

  ** PEAK FLOW RATE TABLE **
   STREAM       Q      Tc   Intensity   Fp(Fm)     Ap     Ae     HEADWATER
   NUMBER     (CFS)  (MIN.) (INCH/HR) (INCH/HR)         (ACRES)    NODE
      1        4.50    8.34    1.342  1.01( 0.20) 0.20       4.3       6.00
      2        4.02   11.59    1.101  1.02( 0.20) 0.20       4.8       9.00

  COMPUTED CONFLUENCE ESTIMATES ARE AS FOLLOWS:
  PEAK FLOW RATE(CFS) =       4.50    Tc(MIN.) =     8.34
  EFFECTIVE AREA(ACRES) =       4.28   AREA-AVERAGED Fm(INCH/HR) =  0.20
  AREA-AVERAGED Fp(INCH/HR) =  1.01  AREA-AVERAGED Ap =  0.20
  TOTAL AREA(ACRES) =        4.8
  LONGEST FLOWPATH FROM NODE      9.00 TO NODE      8.00 =     609.00 FEET.

****************************************************************************
  FLOW PROCESS FROM NODE      8.00 TO NODE      3.00 IS CODE =  31
----------------------------------------------------------------------------
  >>>>>COMPUTE PIPE-FLOW TRAVEL TIME THRU SUBAREA<<<<<
  >>>>>USING COMPUTER-ESTIMATED PIPESIZE (NON-PRESSURE FLOW)<<<<<
============================================================================
  ELEVATION DATA: UPSTREAM(FEET) =  1597.00  DOWNSTREAM(FEET) =  1596.00
  FLOW LENGTH(FEET) =    37.00   MANNING'S N =  0.013
  DEPTH OF FLOW IN  12.0 INCH PIPE IS   8.4 INCHES
  PIPE-FLOW VELOCITY(FEET/SEC.) =   7.69
  ESTIMATED PIPE DIAMETER(INCH) =  12.00    NUMBER OF PIPES =   1
  PIPE-FLOW(CFS) =       4.50
  PIPE TRAVEL TIME(MIN.) =   0.08    Tc(MIN.) =    8.42
  LONGEST FLOWPATH FROM NODE      9.00 TO NODE      3.00 =     646.00 FEET.

****************************************************************************
  FLOW PROCESS FROM NODE      3.00 TO NODE      3.00 IS CODE =  11
----------------------------------------------------------------------------
  >>>>>CONFLUENCE MEMORY BANK # 1 WITH THE MAIN-STREAM MEMORY<<<<<
============================================================================

  ** MAIN STREAM CONFLUENCE DATA **
   STREAM       Q      Tc   Intensity   Fp(Fm)     Ap     Ae     HEADWATER
   NUMBER     (CFS)  (MIN.) (INCH/HR) (INCH/HR)         (ACRES)    NODE
      1        4.50    8.42    1.334  1.01( 0.20) 0.20       4.3       6.00
      2        4.02   11.67    1.096  1.02( 0.20) 0.20       4.8       9.00
  LONGEST FLOWPATH FROM NODE      9.00 TO NODE      3.00 =     646.00 FEET.

  ** MEMORY BANK #  1 CONFLUENCE DATA **
```

```
   STREAM       Q      Tc   Intensity   Fp(Fm)     Ap     Ae     HEADWATER
   NUMBER     (CFS)  (MIN.) (INCH/HR) (INCH/HR)         (ACRES)    NODE
      1        3.54    9.23    1.262  1.31( 0.26) 0.20       3.5       1.00
      2        3.35   11.11    1.129  1.31( 0.26) 0.20       3.8       4.00
  LONGEST FLOWPATH FROM NODE      1.00 TO NODE      3.00 =     679.00 FEET.

  ** PEAK FLOW RATE TABLE **
   STREAM       Q      Tc   Intensity   Fp(Fm)     Ap     Ae     HEADWATER
   NUMBER     (CFS)  (MIN.) (INCH/HR) (INCH/HR)         (ACRES)    NODE
      1        7.92    8.42    1.334  1.14( 0.23) 0.20       7.5       6.00
      2        7.92    9.23    1.262  1.14( 0.23) 0.20       8.0       1.00
      3        7.46   11.11    1.129  1.15( 0.23) 0.20       8.6       4.00
      4        7.28   11.67    1.096  1.15( 0.23) 0.20       8.7       9.00
    TOTAL AREA(ACRES) =         8.7

  COMPUTED CONFLUENCE ESTIMATES ARE AS FOLLOWS:
  PEAK FLOW RATE(CFS) =        7.92  Tc(MIN.) =    8.416
  EFFECTIVE AREA(ACRES) =      7.51  AREA-AVERAGED Fm(INCH/HR) =  0.23
  AREA-AVERAGED Fp(INCH/HR) =  1.14  AREA-AVERAGED Ap =  0.20
  TOTAL AREA(ACRES) =        8.7
  LONGEST FLOWPATH FROM NODE      1.00 TO NODE      3.00 =     679.00 FEET.

****************************************************************************
  FLOW PROCESS FROM NODE     11.00 TO NODE     12.00 IS CODE =  21
----------------------------------------------------------------------------
  >>>>>RATIONAL METHOD INITIAL SUBAREA ANALYSIS<<<<<
  >>USE TIME-OF-CONCENTRATION NOMOGRAPH FOR INITIAL SUBAREA<<
============================================================================
  INITIAL SUBAREA FLOW-LENGTH(FEET) =   205.00
  ELEVATION DATA: UPSTREAM(FEET) =   1601.30  DOWNSTREAM(FEET) =   1600.20

  Tc = K*[(LENGTH** 3.00)/(ELEVATION CHANGE)]**0.20
  SUBAREA ANALYSIS USED MINIMUM Tc(MIN.) =    7.750
  *   2 YEAR RAINFALL INTENSITY(INCH/HR) =  1.401
  SUBAREA Tc AND LOSS RATE DATA(AMC  I ):
   DEVELOPMENT TYPE/      SCS SOIL   AREA      Fp         Ap     SCS   Tc
       LAND USE            GROUP   (ACRES)  (INCH/HR)  (DECIMAL)  CN  (MIN.)
  RESIDENTIAL
   "11+ DWELLINGS/ACRE"       A        0.28      1.33     0.200    17    7.75
  SUBAREA AVERAGE PERVIOUS LOSS RATE, Fp(INCH/HR) =  1.33
  SUBAREA AVERAGE PERVIOUS AREA FRACTION, Ap =  0.200
  SUBAREA RUNOFF(CFS) =      0.29
  TOTAL AREA(ACRES) =      0.28   PEAK FLOW RATE(CFS) =      0.29
============================================================================
  END OF STUDY SUMMARY:
  TOTAL AREA(ACRES)     =        0.3  TC(MIN.) =      7.75
  EFFECTIVE AREA(ACRES) =      0.28  AREA-AVERAGED Fm(INCH/HR)=  0.27
  AREA-AVERAGED Fp(INCH/HR) =  1.33  AREA-AVERAGED Ap = 0.200
  PEAK FLOW RATE(CFS)   =       0.29
============================================================================
============================================================================
  END OF RATIONAL METHOD ANALYSIS
```

```
****************************************************************************
            RATIONAL METHOD HYDROLOGY COMPUTER PROGRAM PACKAGE
         (Reference: 1986 SAN BERNARDINO CO. HYDROLOGY CRITERION)
        (c) Copyright 1983-2008 Advanced Engineering Software (aes)
            Ver. 15.0  Release Date: 04/01/2008  License ID 1420

                          Analysis prepared by:

                              CA Engineering
                       13821 Newport Ave., Ste 110
                            Tustin, Ca. 92780


 ************************** DESCRIPTION OF STUDY **************************
* PROPOSED CONDITION                                                       *
* 5 YR STORM                                                               *
*                                                                          *
 **************************************************************************

  FILE NAME: 816-1PR.DAT
  TIME/DATE OF STUDY: 08:48 07/13/2022
============================================================================
  USER SPECIFIED HYDROLOGY AND HYDRAULIC MODEL INFORMATION:
============================================================================
                    --*TIME-OF-CONCENTRATION MODEL*--

  USER SPECIFIED STORM EVENT(YEAR) =    5.00
  SPECIFIED MINIMUM PIPE SIZE(INCH) =  12.00
  SPECIFIED PERCENT OF GRADIENTS(DECIMAL) TO USE FOR FRICTION SLOPE = 0.85
  *USER-DEFINED LOGARITHMIC INTERPOLATION USED FOR RAINFALL*
  10-YEAR STORM 60-MINUTE INTENSITY(INCH/HOUR) =  0.797
  100-YEAR STORM 60-MINUTE INTENSITY(INCH/HOUR) =  1.350
  COMPUTED RAINFALL INTENSITY DATA:
  STORM EVENT =    5.00   1-HOUR INTENSITY(INCH/HOUR) = 0.6465
  SLOPE OF INTENSITY DURATION CURVE = 0.6000

  *ANTECEDENT MOISTURE CONDITION (AMC) I ASSUMED FOR RATIONAL METHOD*

  *USER-DEFINED STREET-SECTIONS FOR COUPLED PIPEFLOW AND STREETFLOW MODEL*
     HALF-  CROWN TO   STREET-CROSSFALL:   CURB  GUTTER-GEOMETRIES:  MANNING
     WIDTH  CROSSFALL  IN-  / OUT-/PARK-  HEIGHT  WIDTH  LIP   HIKE  FACTOR
NO.   (FT)     (FT)    SIDE / SIDE/ WAY    (FT)    (FT)  (FT)  (FT)    (n)
===  =====  =========  ================  ======  ===== ====== ===== =======
  1   30.0     20.0    0.018/0.018/0.020   0.67    2.00 0.0313 0.167 0.0150

  GLOBAL STREET FLOW-DEPTH CONSTRAINTS:
    1. Relative Flow-Depth =  0.00 FEET
       as (Maximum Allowable Street Flow Depth) - (Top-of-Curb)
    2. (Depth)*(Velocity) Constraint =  6.0 (FT*FT/S)
  *SIZE PIPE WITH A FLOW CAPACITY GREATER THAN
   OR EQUAL TO THE UPSTREAM TRIBUTARY PIPE.*
  *USER-SPECIFIED MINIMUM TOPOGRAPHIC SLOPE ADJUSTMENT NOT SELECTED

****************************************************************************
  FLOW PROCESS FROM NODE      1.00 TO NODE      2.00 IS CODE =  21
----------------------------------------------------------------------------
  >>>>>RATIONAL METHOD INITIAL SUBAREA ANALYSIS<<<<<
  >>USE TIME-OF-CONCENTRATION NOMOGRAPH FOR INITIAL SUBAREA<<
============================================================================
  INITIAL SUBAREA FLOW-LENGTH(FEET) =   485.00
  ELEVATION DATA: UPSTREAM(FEET) =   1616.10  DOWNSTREAM(FEET) =   1603.80
```

```
  Tc = K*[(LENGTH** 3.00)/(ELEVATION CHANGE)]**0.20
  SUBAREA ANALYSIS USED MINIMUM Tc(MIN.) =    8.017
  *   5 YEAR RAINFALL INTENSITY(INCH/HR) =  2.163
  SUBAREA Tc AND LOSS RATE DATA(AMC  I ):
   DEVELOPMENT TYPE/      SCS SOIL   AREA      Fp         Ap     SCS   Tc
       LAND USE            GROUP   (ACRES)  (INCH/HR)  (DECIMAL)  CN  (MIN.)
  RESIDENTIAL
  "11+ DWELLINGS/ACRE"       A        2.11      1.33     0.200    17    8.02
  RESIDENTIAL
  "11+ DWELLINGS/ACRE"       B        0.17      0.94     0.200    36    8.02
  SUBAREA AVERAGE PERVIOUS LOSS RATE, Fp(INCH/HR) =  1.30
  SUBAREA AVERAGE PERVIOUS AREA FRACTION, Ap =  0.200
  SUBAREA RUNOFF(CFS) =      3.91
  TOTAL AREA(ACRES) =      2.28   PEAK FLOW RATE(CFS) =      3.91

****************************************************************************
  FLOW PROCESS FROM NODE      2.00 TO NODE      3.00 IS CODE =  31
----------------------------------------------------------------------------
  >>>>>COMPUTE PIPE-FLOW TRAVEL TIME THRU SUBAREA<<<<<
  >>>>>USING COMPUTER-ESTIMATED PIPESIZE (NON-PRESSURE FLOW)<<<<<
============================================================================
  ELEVATION DATA: UPSTREAM(FEET) =  1596.50  DOWNSTREAM(FEET) =  1596.00
  FLOW LENGTH(FEET) =    44.00   MANNING'S N =  0.013
  DEPTH OF FLOW IN  15.0 INCH PIPE IS   8.5 INCHES
  PIPE-FLOW VELOCITY(FEET/SEC.) =   5.44
  ESTIMATED PIPE DIAMETER(INCH) =  15.00    NUMBER OF PIPES =   1
  PIPE-FLOW(CFS) =       3.91
  PIPE TRAVEL TIME(MIN.) =   0.13    Tc(MIN.) =    8.15
  LONGEST FLOWPATH FROM NODE      1.00 TO NODE      3.00 =     529.00 FEET.

****************************************************************************
  FLOW PROCESS FROM NODE      3.00 TO NODE      3.00 IS CODE =   1
----------------------------------------------------------------------------
  >>>>>DESIGNATE INDEPENDENT STREAM FOR CONFLUENCE<<<<<
============================================================================
  TOTAL NUMBER OF STREAMS =  2
  CONFLUENCE VALUES USED FOR INDEPENDENT STREAM  1 ARE:
  TIME OF CONCENTRATION(MIN.) =    8.15
  RAINFALL INTENSITY(INCH/HR) =   2.14
  AREA-AVERAGED Fm(INCH/HR) =  0.26
  AREA-AVERAGED Fp(INCH/HR) =  1.30
  AREA-AVERAGED Ap =  0.20
  EFFECTIVE STREAM AREA(ACRES) =       2.28
  TOTAL STREAM AREA(ACRES) =       2.28
  PEAK FLOW RATE(CFS) AT CONFLUENCE =       3.91

****************************************************************************
  FLOW PROCESS FROM NODE      4.00 TO NODE      5.00 IS CODE =  21
----------------------------------------------------------------------------
  >>>>>RATIONAL METHOD INITIAL SUBAREA ANALYSIS<<<<<
  >>USE TIME-OF-CONCENTRATION NOMOGRAPH FOR INITIAL SUBAREA<<
============================================================================
  INITIAL SUBAREA FLOW-LENGTH(FEET) =   363.00
  ELEVATION DATA: UPSTREAM(FEET) =   1604.30  DOWNSTREAM(FEET) =   1602.50

  Tc = K*[(LENGTH** 3.00)/(ELEVATION CHANGE)]**0.20
  SUBAREA ANALYSIS USED MINIMUM Tc(MIN.) =    9.895
  *   5 YEAR RAINFALL INTENSITY(INCH/HR) =  1.906
  SUBAREA Tc AND LOSS RATE DATA(AMC  I ):
   DEVELOPMENT TYPE/      SCS SOIL   AREA      Fp         Ap     SCS   Tc
       LAND USE            GROUP   (ACRES)  (INCH/HR)  (DECIMAL)  CN  (MIN.)
  RESIDENTIAL
  "11+ DWELLINGS/ACRE"       A        1.55      1.33     0.200    17    9.90
```

```
  SUBAREA AVERAGE PERVIOUS LOSS RATE, Fp(INCH/HR) =  1.33
  SUBAREA AVERAGE PERVIOUS AREA FRACTION, Ap =  0.200
  SUBAREA RUNOFF(CFS) =      2.29
  TOTAL AREA(ACRES) =      1.55   PEAK FLOW RATE(CFS) =      2.29

****************************************************************************
  FLOW PROCESS FROM NODE      5.00 TO NODE      3.00 IS CODE =  31
----------------------------------------------------------------------------
  >>>>>COMPUTE PIPE-FLOW TRAVEL TIME THRU SUBAREA<<<<<
  >>>>>USING COMPUTER-ESTIMATED PIPESIZE (NON-PRESSURE FLOW)<<<<<
============================================================================
  ELEVATION DATA: UPSTREAM(FEET) =  1596.50  DOWNSTREAM(FEET) =  1596.00
  FLOW LENGTH(FEET) =    32.00   MANNING'S N =  0.013
  DEPTH OF FLOW IN  12.0 INCH PIPE IS   6.4 INCHES
  PIPE-FLOW VELOCITY(FEET/SEC.) =   5.37
  ESTIMATED PIPE DIAMETER(INCH) =  12.00    NUMBER OF PIPES =   1
  PIPE-FLOW(CFS) =       2.29
  PIPE TRAVEL TIME(MIN.) =   0.10    Tc(MIN.) =    9.99
  LONGEST FLOWPATH FROM NODE      4.00 TO NODE      3.00 =     395.00 FEET.

****************************************************************************
  FLOW PROCESS FROM NODE      3.00 TO NODE      3.00 IS CODE =   1
----------------------------------------------------------------------------
  >>>>>DESIGNATE INDEPENDENT STREAM FOR CONFLUENCE<<<<<
  >>>>>AND COMPUTE VARIOUS CONFLUENCED STREAM VALUES<<<<<
============================================================================
  TOTAL NUMBER OF STREAMS =  2
  CONFLUENCE VALUES USED FOR INDEPENDENT STREAM  2 ARE:
  TIME OF CONCENTRATION(MIN.) =    9.99
  RAINFALL INTENSITY(INCH/HR) =   1.90
  AREA-AVERAGED Fm(INCH/HR) =  0.27
  AREA-AVERAGED Fp(INCH/HR) =  1.33
  AREA-AVERAGED Ap =  0.20
  EFFECTIVE STREAM AREA(ACRES) =       1.55
  TOTAL STREAM AREA(ACRES) =       1.55
  PEAK FLOW RATE(CFS) AT CONFLUENCE =       2.29

  ** CONFLUENCE DATA **
   STREAM       Q      Tc   Intensity   Fp(Fm)     Ap     Ae     HEADWATER
   NUMBER     (CFS)  (MIN.) (INCH/HR) (INCH/HR)         (ACRES)    NODE
      1        3.91    8.15    2.142  1.30( 0.26) 0.20       2.3       1.00
      2        2.29    9.99    1.895  1.33( 0.27) 0.20       1.5       4.00

  RAINFALL INTENSITY AND TIME OF CONCENTRATION RATIO
  CONFLUENCE FORMULA USED FOR  2 STREAMS.

  ** PEAK FLOW RATE TABLE **
   STREAM       Q      Tc   Intensity   Fp(Fm)     Ap     Ae     HEADWATER
   NUMBER     (CFS)  (MIN.) (INCH/HR) (INCH/HR)         (ACRES)    NODE
      1        6.05    8.15    2.142  1.31( 0.26) 0.20       3.5       1.00
      2        5.68    9.99    1.895  1.31( 0.26) 0.20       3.8       4.00

  COMPUTED CONFLUENCE ESTIMATES ARE AS FOLLOWS:
  PEAK FLOW RATE(CFS) =       6.05    Tc(MIN.) =     8.15
  EFFECTIVE AREA(ACRES) =       3.54   AREA-AVERAGED Fm(INCH/HR) =  0.26
  AREA-AVERAGED Fp(INCH/HR) =  1.31  AREA-AVERAGED Ap =  0.20
  TOTAL AREA(ACRES) =        3.8
  LONGEST FLOWPATH FROM NODE      1.00 TO NODE      3.00 =     529.00 FEET.

****************************************************************************
  FLOW PROCESS FROM NODE      3.00 TO NODE      3.00 IS CODE =  31
----------------------------------------------------------------------------
  >>>>>COMPUTE PIPE-FLOW TRAVEL TIME THRU SUBAREA<<<<<
```

```
  >>>>>USING COMPUTER-ESTIMATED PIPESIZE (NON-PRESSURE FLOW)<<<<<
============================================================================
  ELEVATION DATA: UPSTREAM(FEET) =  1596.20  DOWNSTREAM(FEET) =  1596.00
  FLOW LENGTH(FEET) =   150.00   MANNING'S N =  0.013
  DEPTH OF FLOW IN  24.0 INCH PIPE IS  16.2 INCHES
  PIPE-FLOW VELOCITY(FEET/SEC.) =   2.69
  ESTIMATED PIPE DIAMETER(INCH) =  24.00    NUMBER OF PIPES =   1
  PIPE-FLOW(CFS) =       6.05
  PIPE TRAVEL TIME(MIN.) =   0.93    Tc(MIN.) =    9.08
  LONGEST FLOWPATH FROM NODE      1.00 TO NODE      3.00 =     679.00 FEET.

****************************************************************************
  FLOW PROCESS FROM NODE      3.00 TO NODE      3.00 IS CODE =  10
----------------------------------------------------------------------------
  >>>>>MAIN-STREAM MEMORY COPIED ONTO MEMORY BANK # 1 <<<<<
============================================================================

****************************************************************************
  FLOW PROCESS FROM NODE      6.00 TO NODE      7.00 IS CODE =  21
----------------------------------------------------------------------------
  >>>>>RATIONAL METHOD INITIAL SUBAREA ANALYSIS<<<<<
  >>USE TIME-OF-CONCENTRATION NOMOGRAPH FOR INITIAL SUBAREA<<
============================================================================
  INITIAL SUBAREA FLOW-LENGTH(FEET) =   496.00
  ELEVATION DATA: UPSTREAM(FEET) =   1615.00  DOWNSTREAM(FEET) =   1603.60

  Tc = K*[(LENGTH** 3.00)/(ELEVATION CHANGE)]**0.20
  SUBAREA ANALYSIS USED MINIMUM Tc(MIN.) =    8.250
  *   5 YEAR RAINFALL INTENSITY(INCH/HR) =  2.126
  SUBAREA Tc AND LOSS RATE DATA(AMC  I ):
   DEVELOPMENT TYPE/      SCS SOIL   AREA      Fp         Ap     SCS   Tc
       LAND USE            GROUP   (ACRES)  (INCH/HR)  (DECIMAL)  CN  (MIN.)
  RESIDENTIAL
  "11+ DWELLINGS/ACRE"       A        0.14      1.33     0.200    17    8.25
  RESIDENTIAL
  "11+ DWELLINGS/ACRE"       B        2.70      0.94     0.200    36    8.25
  SUBAREA AVERAGE PERVIOUS LOSS RATE, Fp(INCH/HR) =  0.96
  SUBAREA AVERAGE PERVIOUS AREA FRACTION, Ap =  0.200
  SUBAREA RUNOFF(CFS) =      4.94
  TOTAL AREA(ACRES) =      2.84   PEAK FLOW RATE(CFS) =      4.94

****************************************************************************
  FLOW PROCESS FROM NODE      7.00 TO NODE      8.00 IS CODE =  31
----------------------------------------------------------------------------
  >>>>>COMPUTE PIPE-FLOW TRAVEL TIME THRU SUBAREA<<<<<
  >>>>>USING COMPUTER-ESTIMATED PIPESIZE (NON-PRESSURE FLOW)<<<<<
============================================================================
  ELEVATION DATA: UPSTREAM(FEET) =  1597.30  DOWNSTREAM(FEET) =  1597.00
  FLOW LENGTH(FEET) =    26.00   MANNING'S N =  0.013
  DEPTH OF FLOW IN  15.0 INCH PIPE IS   9.9 INCHES
  PIPE-FLOW VELOCITY(FEET/SEC.) =   5.75
  ESTIMATED PIPE DIAMETER(INCH) =  15.00    NUMBER OF PIPES =   1
  PIPE-FLOW(CFS) =       4.94
  PIPE TRAVEL TIME(MIN.) =   0.08    Tc(MIN.) =    8.33
  LONGEST FLOWPATH FROM NODE      6.00 TO NODE      8.00 =     522.00 FEET.

****************************************************************************
  FLOW PROCESS FROM NODE      8.00 TO NODE      8.00 IS CODE =   1
----------------------------------------------------------------------------
  >>>>>DESIGNATE INDEPENDENT STREAM FOR CONFLUENCE<<<<<
============================================================================
  TOTAL NUMBER OF STREAMS =  2
  CONFLUENCE VALUES USED FOR INDEPENDENT STREAM  1 ARE:
```

```
  TIME OF CONCENTRATION(MIN.) =    8.33
  RAINFALL INTENSITY(INCH/HR) =   2.11
  AREA-AVERAGED Fm(INCH/HR) =  0.19
  AREA-AVERAGED Fp(INCH/HR) =  0.96
  AREA-AVERAGED Ap =  0.20
  EFFECTIVE STREAM AREA(ACRES) =       2.84
  TOTAL STREAM AREA(ACRES) =       2.84
  PEAK FLOW RATE(CFS) AT CONFLUENCE =       4.94

****************************************************************************
  FLOW PROCESS FROM NODE      9.00 TO NODE     10.00 IS CODE =  21
----------------------------------------------------------------------------
  >>>>>RATIONAL METHOD INITIAL SUBAREA ANALYSIS<<<<<
  >>USE TIME-OF-CONCENTRATION NOMOGRAPH FOR INITIAL SUBAREA<<
============================================================================
  INITIAL SUBAREA FLOW-LENGTH(FEET) =   444.00
  ELEVATION DATA: UPSTREAM(FEET) =   1603.50  DOWNSTREAM(FEET) =   1601.30

  Tc = K*[(LENGTH** 3.00)/(ELEVATION CHANGE)]**0.20
  SUBAREA ANALYSIS USED MINIMUM Tc(MIN.) =   10.727
  *   5 YEAR RAINFALL INTENSITY(INCH/HR) =  1.816
  SUBAREA Tc AND LOSS RATE DATA(AMC  I ):
   DEVELOPMENT TYPE/      SCS SOIL   AREA      Fp         Ap     SCS   Tc
       LAND USE            GROUP   (ACRES)  (INCH/HR)  (DECIMAL)  CN  (MIN.)
  RESIDENTIAL
  "11+ DWELLINGS/ACRE"       A        0.78      1.33     0.200    17   10.73
  RESIDENTIAL
  "11+ DWELLINGS/ACRE"       B        1.22      0.94     0.200    36   10.73
  SUBAREA AVERAGE PERVIOUS LOSS RATE, Fp(INCH/HR) =  1.09
  SUBAREA AVERAGE PERVIOUS AREA FRACTION, Ap =  0.200
  SUBAREA RUNOFF(CFS) =      2.88
  TOTAL AREA(ACRES) =      2.00   PEAK FLOW RATE(CFS) =      2.88

****************************************************************************
  FLOW PROCESS FROM NODE     10.00 TO NODE      8.00 IS CODE =  31
----------------------------------------------------------------------------
  >>>>>COMPUTE PIPE-FLOW TRAVEL TIME THRU SUBAREA<<<<<
  >>>>>USING COMPUTER-ESTIMATED PIPESIZE (NON-PRESSURE FLOW)<<<<<
============================================================================
  ELEVATION DATA: UPSTREAM(FEET) =  1597.80  DOWNSTREAM(FEET) =  1597.00
  FLOW LENGTH(FEET) =   165.00   MANNING'S N =  0.013
  DEPTH OF FLOW IN  15.0 INCH PIPE IS   9.2 INCHES
  PIPE-FLOW VELOCITY(FEET/SEC.) =   3.65
  ESTIMATED PIPE DIAMETER(INCH) =  15.00    NUMBER OF PIPES =   1
  PIPE-FLOW(CFS) =       2.88
  PIPE TRAVEL TIME(MIN.) =   0.75    Tc(MIN.) =   11.48
  LONGEST FLOWPATH FROM NODE      9.00 TO NODE      8.00 =     609.00 FEET.

****************************************************************************
  FLOW PROCESS FROM NODE      8.00 TO NODE      8.00 IS CODE =   1
----------------------------------------------------------------------------
  >>>>>DESIGNATE INDEPENDENT STREAM FOR CONFLUENCE<<<<<
  >>>>>AND COMPUTE VARIOUS CONFLUENCED STREAM VALUES<<<<<
============================================================================
  TOTAL NUMBER OF STREAMS =  2
  CONFLUENCE VALUES USED FOR INDEPENDENT STREAM  2 ARE:
  TIME OF CONCENTRATION(MIN.) =   11.48
  RAINFALL INTENSITY(INCH/HR) =   1.74
  AREA-AVERAGED Fm(INCH/HR) =  0.22
  AREA-AVERAGED Fp(INCH/HR) =  1.09
  AREA-AVERAGED Ap =  0.20
  EFFECTIVE STREAM AREA(ACRES) =       2.00
  TOTAL STREAM AREA(ACRES) =       2.00
```

```
  PEAK FLOW RATE(CFS) AT CONFLUENCE =       2.88

  ** CONFLUENCE DATA **
   STREAM       Q      Tc   Intensity   Fp(Fm)     Ap     Ae     HEADWATER
   NUMBER     (CFS)  (MIN.) (INCH/HR) (INCH/HR)         (ACRES)    NODE
      1        4.94    8.33    2.115  0.96( 0.19) 0.20       2.8       6.00
      2        2.88   11.48    1.744  1.09( 0.22) 0.20       2.0       9.00

  RAINFALL INTENSITY AND TIME OF CONCENTRATION RATIO
  CONFLUENCE FORMULA USED FOR  2 STREAMS.

  ** PEAK FLOW RATE TABLE **
   STREAM       Q      Tc   Intensity   Fp(Fm)     Ap     Ae     HEADWATER
   NUMBER     (CFS)  (MIN.) (INCH/HR) (INCH/HR)         (ACRES)    NODE
      1        7.54    8.33    2.115  1.01( 0.20) 0.20       4.3       6.00
      2        6.87   11.48    1.744  1.02( 0.20) 0.20       4.8       9.00

  COMPUTED CONFLUENCE ESTIMATES ARE AS FOLLOWS:
  PEAK FLOW RATE(CFS) =       7.54    Tc(MIN.) =     8.33
  EFFECTIVE AREA(ACRES) =       4.29   AREA-AVERAGED Fm(INCH/HR) =  0.20
  AREA-AVERAGED Fp(INCH/HR) =  1.01  AREA-AVERAGED Ap =  0.20
  TOTAL AREA(ACRES) =        4.8
  LONGEST FLOWPATH FROM NODE      9.00 TO NODE      8.00 =     609.00 FEET.

****************************************************************************
  FLOW PROCESS FROM NODE      8.00 TO NODE      3.00 IS CODE =  31
----------------------------------------------------------------------------
  >>>>>COMPUTE PIPE-FLOW TRAVEL TIME THRU SUBAREA<<<<<
  >>>>>USING COMPUTER-ESTIMATED PIPESIZE (NON-PRESSURE FLOW)<<<<<
============================================================================
  ELEVATION DATA: UPSTREAM(FEET) =  1597.00  DOWNSTREAM(FEET) =  1596.00
  FLOW LENGTH(FEET) =    37.00   MANNING'S N =  0.013
  DEPTH OF FLOW IN  15.0 INCH PIPE IS   9.9 INCHES
  PIPE-FLOW VELOCITY(FEET/SEC.) =   8.80
  ESTIMATED PIPE DIAMETER(INCH) =  15.00    NUMBER OF PIPES =   1
  PIPE-FLOW(CFS) =       7.54
  PIPE TRAVEL TIME(MIN.) =   0.07    Tc(MIN.) =    8.40
  LONGEST FLOWPATH FROM NODE      9.00 TO NODE      3.00 =     646.00 FEET.

****************************************************************************
  FLOW PROCESS FROM NODE      3.00 TO NODE      3.00 IS CODE =  11
----------------------------------------------------------------------------
  >>>>>CONFLUENCE MEMORY BANK # 1 WITH THE MAIN-STREAM MEMORY<<<<<
============================================================================

  ** MAIN STREAM CONFLUENCE DATA **
   STREAM       Q      Tc   Intensity   Fp(Fm)     Ap     Ae     HEADWATER
   NUMBER     (CFS)  (MIN.) (INCH/HR) (INCH/HR)         (ACRES)    NODE
      1        7.54    8.40    2.104  1.01( 0.20) 0.20       4.3       6.00
      2        6.87   11.55    1.737  1.02( 0.20) 0.20       4.8       9.00
  LONGEST FLOWPATH FROM NODE      9.00 TO NODE      3.00 =     646.00 FEET.

  ** MEMORY BANK #  1 CONFLUENCE DATA **
   STREAM       Q      Tc   Intensity   Fp(Fm)     Ap     Ae     HEADWATER
   NUMBER     (CFS)  (MIN.) (INCH/HR) (INCH/HR)         (ACRES)    NODE
      1        6.05    9.08    2.007  1.31( 0.26) 0.20       3.5       1.00
      2        5.68   10.94    1.795  1.31( 0.26) 0.20       3.8       4.00
  LONGEST FLOWPATH FROM NODE      1.00 TO NODE      3.00 =     679.00 FEET.

  ** PEAK FLOW RATE TABLE **
   STREAM       Q      Tc   Intensity   Fp(Fm)     Ap     Ae     HEADWATER
   NUMBER     (CFS)  (MIN.) (INCH/HR) (INCH/HR)         (ACRES)    NODE
      1       13.44    8.40    2.104  1.14( 0.23) 0.20       7.6       6.00
```

```
      2       13.45    9.08    2.007  1.14( 0.23) 0.20       8.0       1.00
      3       12.68   10.94    1.795  1.15( 0.23) 0.20       8.6       4.00
      4       12.33   11.55    1.737  1.15( 0.23) 0.20       8.7       9.00
    TOTAL AREA(ACRES) =         8.7

  COMPUTED CONFLUENCE ESTIMATES ARE AS FOLLOWS:
  PEAK FLOW RATE(CFS) =       13.45  Tc(MIN.) =    9.082
  EFFECTIVE AREA(ACRES) =      7.95  AREA-AVERAGED Fm(INCH/HR) =  0.23
  AREA-AVERAGED Fp(INCH/HR) =  1.15  AREA-AVERAGED Ap =  0.20
  TOTAL AREA(ACRES) =        8.7
  LONGEST FLOWPATH FROM NODE      1.00 TO NODE      3.00 =     679.00 FEET.

****************************************************************************
  FLOW PROCESS FROM NODE     11.00 TO NODE     12.00 IS CODE =  21
----------------------------------------------------------------------------
  >>>>>RATIONAL METHOD INITIAL SUBAREA ANALYSIS<<<<<
  >>USE TIME-OF-CONCENTRATION NOMOGRAPH FOR INITIAL SUBAREA<<
============================================================================
  INITIAL SUBAREA FLOW-LENGTH(FEET) =   205.00
  ELEVATION DATA: UPSTREAM(FEET) =   1601.30  DOWNSTREAM(FEET) =   1600.20

  Tc = K*[(LENGTH** 3.00)/(ELEVATION CHANGE)]**0.20
  SUBAREA ANALYSIS USED MINIMUM Tc(MIN.) =    7.750
  *   5 YEAR RAINFALL INTENSITY(INCH/HR) =  2.208
  SUBAREA Tc AND LOSS RATE DATA(AMC  I ):
   DEVELOPMENT TYPE/      SCS SOIL   AREA      Fp         Ap     SCS   Tc
       LAND USE            GROUP   (ACRES)  (INCH/HR)  (DECIMAL)  CN  (MIN.)
  RESIDENTIAL
  "11+ DWELLINGS/ACRE"      A        0.28      1.33     0.200    17    7.75
  SUBAREA AVERAGE PERVIOUS LOSS RATE, Fp(INCH/HR) =  1.33
  SUBAREA AVERAGE PERVIOUS AREA FRACTION, Ap =  0.200
  SUBAREA RUNOFF(CFS) =       0.49
  TOTAL AREA(ACRES) =      0.28   PEAK FLOW RATE(CFS) =      0.49
============================================================================
  END OF STUDY SUMMARY:
  TOTAL AREA(ACRES)     =        0.3  TC(MIN.) =      7.75
  EFFECTIVE AREA(ACRES) =      0.28  AREA-AVERAGED Fm(INCH/HR)=  0.27
  AREA-AVERAGED Fp(INCH/HR) =  1.33  AREA-AVERAGED Ap = 0.200
  PEAK FLOW RATE(CFS)   =       0.49
============================================================================
============================================================================
  END OF RATIONAL METHOD ANALYSIS
```

```
****************************************************************************
            RATIONAL METHOD HYDROLOGY COMPUTER PROGRAM PACKAGE
         (Reference: 1986 SAN BERNARDINO CO. HYDROLOGY CRITERION)
        (c) Copyright 1983-2008 Advanced Engineering Software (aes)
            Ver. 15.0  Release Date: 04/01/2008  License ID 1420

                          Analysis prepared by:

                              CA Engineering
                       13821 Newport Ave., Ste 110
                            Tustin, Ca. 92780


 ************************** DESCRIPTION OF STUDY **************************
* PROPOSED CONDITION                                                       *
* 10 YR STORM                                                              *
*                                                                          *
 **************************************************************************

  FILE NAME: 816-1PR.DAT
  TIME/DATE OF STUDY: 08:49 07/13/2022
============================================================================
  USER SPECIFIED HYDROLOGY AND HYDRAULIC MODEL INFORMATION:
============================================================================
                    --*TIME-OF-CONCENTRATION MODEL*--

  USER SPECIFIED STORM EVENT(YEAR) =   10.00
  SPECIFIED MINIMUM PIPE SIZE(INCH) =  12.00
  SPECIFIED PERCENT OF GRADIENTS(DECIMAL) TO USE FOR FRICTION SLOPE = 0.85
  *USER-DEFINED LOGARITHMIC INTERPOLATION USED FOR RAINFALL*
  10-YEAR STORM 60-MINUTE INTENSITY(INCH/HOUR) =  0.797
  100-YEAR STORM 60-MINUTE INTENSITY(INCH/HOUR) =  1.350
  COMPUTED RAINFALL INTENSITY DATA:
  STORM EVENT =   10.00   1-HOUR INTENSITY(INCH/HOUR) = 0.8050
  SLOPE OF INTENSITY DURATION CURVE = 0.6000

  *ANTECEDENT MOISTURE CONDITION (AMC) II ASSUMED FOR RATIONAL METHOD*

  *USER-DEFINED STREET-SECTIONS FOR COUPLED PIPEFLOW AND STREETFLOW MODEL*
     HALF-  CROWN TO   STREET-CROSSFALL:   CURB  GUTTER-GEOMETRIES:  MANNING
     WIDTH  CROSSFALL  IN-  / OUT-/PARK-  HEIGHT  WIDTH  LIP   HIKE  FACTOR
NO.   (FT)     (FT)    SIDE / SIDE/ WAY    (FT)    (FT)  (FT)  (FT)    (n)
===  =====  =========  =================  ======  ===== ====== ===== =======
  1   30.0     20.0    0.018/0.018/0.020   0.67    2.00 0.0313 0.167 0.0150

  GLOBAL STREET FLOW-DEPTH CONSTRAINTS:
    1. Relative Flow-Depth =  0.00 FEET
       as (Maximum Allowable Street Flow Depth) - (Top-of-Curb)
    2. (Depth)*(Velocity) Constraint =  6.0 (FT*FT/S)
  *SIZE PIPE WITH A FLOW CAPACITY GREATER THAN
   OR EQUAL TO THE UPSTREAM TRIBUTARY PIPE.*
  *USER-SPECIFIED MINIMUM TOPOGRAPHIC SLOPE ADJUSTMENT NOT SELECTED

****************************************************************************
  FLOW PROCESS FROM NODE      1.00 TO NODE      2.00 IS CODE =  21
----------------------------------------------------------------------------
  >>>>>RATIONAL METHOD INITIAL SUBAREA ANALYSIS<<<<<
  >>USE TIME-OF-CONCENTRATION NOMOGRAPH FOR INITIAL SUBAREA<<
============================================================================
  INITIAL SUBAREA FLOW-LENGTH(FEET) =   485.00
  ELEVATION DATA: UPSTREAM(FEET) =   1616.10  DOWNSTREAM(FEET) =   1603.80
```

```
  Tc = K*[(LENGTH** 3.00)/(ELEVATION CHANGE)]**0.20
  SUBAREA ANALYSIS USED MINIMUM Tc(MIN.) =    8.017
  *  10 YEAR RAINFALL INTENSITY(INCH/HR) =  2.693
  SUBAREA Tc AND LOSS RATE DATA(AMC  II):
   DEVELOPMENT TYPE/      SCS SOIL   AREA      Fp         Ap     SCS   Tc
       LAND USE            GROUP   (ACRES)  (INCH/HR)  (DECIMAL)  CN  (MIN.)
  RESIDENTIAL
  "11+ DWELLINGS/ACRE"       A        2.11      0.98     0.200    32    8.02
  RESIDENTIAL
  "11+ DWELLINGS/ACRE"       B        0.17      0.75     0.200    56    8.02
  SUBAREA AVERAGE PERVIOUS LOSS RATE, Fp(INCH/HR) =  0.96
  SUBAREA AVERAGE PERVIOUS AREA FRACTION, Ap =  0.200
  SUBAREA RUNOFF(CFS) =      5.13
  TOTAL AREA(ACRES) =      2.28   PEAK FLOW RATE(CFS) =      5.13

****************************************************************************
  FLOW PROCESS FROM NODE      2.00 TO NODE      3.00 IS CODE =  31
----------------------------------------------------------------------------
  >>>>>COMPUTE PIPE-FLOW TRAVEL TIME THRU SUBAREA<<<<<
  >>>>>USING COMPUTER-ESTIMATED PIPESIZE (NON-PRESSURE FLOW)<<<<<
============================================================================
  ELEVATION DATA: UPSTREAM(FEET) =  1596.50  DOWNSTREAM(FEET) =  1596.00
  FLOW LENGTH(FEET) =    44.00   MANNING'S N =  0.013
  DEPTH OF FLOW IN  15.0 INCH PIPE IS  10.2 INCHES
  PIPE-FLOW VELOCITY(FEET/SEC.) =   5.76
  ESTIMATED PIPE DIAMETER(INCH) =  15.00    NUMBER OF PIPES =   1
  PIPE-FLOW(CFS) =       5.13
  PIPE TRAVEL TIME(MIN.) =   0.13    Tc(MIN.) =    8.14
  LONGEST FLOWPATH FROM NODE      1.00 TO NODE      3.00 =     529.00 FEET.

****************************************************************************
  FLOW PROCESS FROM NODE      3.00 TO NODE      3.00 IS CODE =   1
----------------------------------------------------------------------------
  >>>>>DESIGNATE INDEPENDENT STREAM FOR CONFLUENCE<<<<<
============================================================================
  TOTAL NUMBER OF STREAMS =  2
  CONFLUENCE VALUES USED FOR INDEPENDENT STREAM  1 ARE:
  TIME OF CONCENTRATION(MIN.) =    8.14
  RAINFALL INTENSITY(INCH/HR) =   2.67
  AREA-AVERAGED Fm(INCH/HR) =  0.19
  AREA-AVERAGED Fp(INCH/HR) =  0.96
  AREA-AVERAGED Ap =  0.20
  EFFECTIVE STREAM AREA(ACRES) =       2.28
  TOTAL STREAM AREA(ACRES) =       2.28
  PEAK FLOW RATE(CFS) AT CONFLUENCE =       5.13

****************************************************************************
  FLOW PROCESS FROM NODE      4.00 TO NODE      5.00 IS CODE =  21
----------------------------------------------------------------------------
  >>>>>RATIONAL METHOD INITIAL SUBAREA ANALYSIS<<<<<
  >>USE TIME-OF-CONCENTRATION NOMOGRAPH FOR INITIAL SUBAREA<<
============================================================================
  INITIAL SUBAREA FLOW-LENGTH(FEET) =   363.00
  ELEVATION DATA: UPSTREAM(FEET) =   1604.30  DOWNSTREAM(FEET) =   1602.50

  Tc = K*[(LENGTH** 3.00)/(ELEVATION CHANGE)]**0.20
  SUBAREA ANALYSIS USED MINIMUM Tc(MIN.) =    9.895
  *  10 YEAR RAINFALL INTENSITY(INCH/HR) =  2.374
  SUBAREA Tc AND LOSS RATE DATA(AMC  II):
   DEVELOPMENT TYPE/      SCS SOIL   AREA      Fp         Ap     SCS   Tc
       LAND USE            GROUP   (ACRES)  (INCH/HR)  (DECIMAL)  CN  (MIN.)
  RESIDENTIAL
  "11+ DWELLINGS/ACRE"       A        1.55      0.98     0.200    32    9.90
```

```
  SUBAREA AVERAGE PERVIOUS LOSS RATE, Fp(INCH/HR) =  0.97
  SUBAREA AVERAGE PERVIOUS AREA FRACTION, Ap =  0.200
  SUBAREA RUNOFF(CFS) =      3.04
  TOTAL AREA(ACRES) =      1.55   PEAK FLOW RATE(CFS) =      3.04

****************************************************************************
  FLOW PROCESS FROM NODE      5.00 TO NODE      3.00 IS CODE =  31
----------------------------------------------------------------------------
  >>>>>COMPUTE PIPE-FLOW TRAVEL TIME THRU SUBAREA<<<<<
  >>>>>USING COMPUTER-ESTIMATED PIPESIZE (NON-PRESSURE FLOW)<<<<<
============================================================================
  ELEVATION DATA: UPSTREAM(FEET) =  1596.50  DOWNSTREAM(FEET) =  1596.00
  FLOW LENGTH(FEET) =    32.00   MANNING'S N =  0.013
  DEPTH OF FLOW IN  12.0 INCH PIPE IS   7.7 INCHES
  PIPE-FLOW VELOCITY(FEET/SEC.) =   5.72
  ESTIMATED PIPE DIAMETER(INCH) =  12.00    NUMBER OF PIPES =   1
  PIPE-FLOW(CFS) =       3.04
  PIPE TRAVEL TIME(MIN.) =   0.09    Tc(MIN.) =    9.99
  LONGEST FLOWPATH FROM NODE      4.00 TO NODE      3.00 =     395.00 FEET.

****************************************************************************
  FLOW PROCESS FROM NODE      3.00 TO NODE      3.00 IS CODE =   1
----------------------------------------------------------------------------
  >>>>>DESIGNATE INDEPENDENT STREAM FOR CONFLUENCE<<<<<
  >>>>>AND COMPUTE VARIOUS CONFLUENCED STREAM VALUES<<<<<
============================================================================
  TOTAL NUMBER OF STREAMS =  2
  CONFLUENCE VALUES USED FOR INDEPENDENT STREAM  2 ARE:
  TIME OF CONCENTRATION(MIN.) =    9.99
  RAINFALL INTENSITY(INCH/HR) =   2.36
  AREA-AVERAGED Fm(INCH/HR) =  0.20
  AREA-AVERAGED Fp(INCH/HR) =  0.97
  AREA-AVERAGED Ap =  0.20
  EFFECTIVE STREAM AREA(ACRES) =       1.55
  TOTAL STREAM AREA(ACRES) =       1.55
  PEAK FLOW RATE(CFS) AT CONFLUENCE =       3.04

  ** CONFLUENCE DATA **
   STREAM       Q      Tc   Intensity   Fp(Fm)     Ap     Ae     HEADWATER
   NUMBER     (CFS)  (MIN.) (INCH/HR) (INCH/HR)         (ACRES)    NODE
      1        5.13    8.14    2.668  0.96( 0.19) 0.20       2.3       1.00
      2        3.04    9.99    2.360  0.97( 0.20) 0.20       1.5       4.00

  RAINFALL INTENSITY AND TIME OF CONCENTRATION RATIO
  CONFLUENCE FORMULA USED FOR  2 STREAMS.

  ** PEAK FLOW RATE TABLE **
   STREAM       Q      Tc   Intensity   Fp(Fm)     Ap     Ae     HEADWATER
   NUMBER     (CFS)  (MIN.) (INCH/HR) (INCH/HR)         (ACRES)    NODE
      1        7.96    8.14    2.668  0.96( 0.19) 0.20       3.5       1.00
      2        7.53    9.99    2.360  0.96( 0.19) 0.20       3.8       4.00

  COMPUTED CONFLUENCE ESTIMATES ARE AS FOLLOWS:
  PEAK FLOW RATE(CFS) =       7.96    Tc(MIN.) =     8.14
  EFFECTIVE AREA(ACRES) =       3.54   AREA-AVERAGED Fm(INCH/HR) =  0.19
  AREA-AVERAGED Fp(INCH/HR) =  0.96  AREA-AVERAGED Ap =  0.20
  TOTAL AREA(ACRES) =       3.8
  LONGEST FLOWPATH FROM NODE      1.00 TO NODE      3.00 =     529.00 FEET.

****************************************************************************
  FLOW PROCESS FROM NODE      3.00 TO NODE      3.00 IS CODE =  31
----------------------------------------------------------------------------
  >>>>>COMPUTE PIPE-FLOW TRAVEL TIME THRU SUBAREA<<<<<
```

```
  >>>>>USING COMPUTER-ESTIMATED PIPESIZE (NON-PRESSURE FLOW)<<<<<
============================================================================
  ELEVATION DATA: UPSTREAM(FEET) =  1596.20  DOWNSTREAM(FEET) =  1596.00
  FLOW LENGTH(FEET) =   150.00   MANNING'S N =  0.013
  DEPTH OF FLOW IN  27.0 INCH PIPE IS  17.7 INCHES
  PIPE-FLOW VELOCITY(FEET/SEC.) =   2.89
  ESTIMATED PIPE DIAMETER(INCH) =  27.00    NUMBER OF PIPES =   1
  PIPE-FLOW(CFS) =       7.96
  PIPE TRAVEL TIME(MIN.) =   0.87    Tc(MIN.) =    9.01
  LONGEST FLOWPATH FROM NODE      1.00 TO NODE      3.00 =     679.00 FEET.

****************************************************************************
  FLOW PROCESS FROM NODE      3.00 TO NODE      3.00 IS CODE =  10
----------------------------------------------------------------------------
  >>>>>MAIN-STREAM MEMORY COPIED ONTO MEMORY BANK # 1 <<<<<
============================================================================

****************************************************************************
  FLOW PROCESS FROM NODE      6.00 TO NODE      7.00 IS CODE =  21
----------------------------------------------------------------------------
  >>>>>RATIONAL METHOD INITIAL SUBAREA ANALYSIS<<<<<
  >>USE TIME-OF-CONCENTRATION NOMOGRAPH FOR INITIAL SUBAREA<<
============================================================================
  INITIAL SUBAREA FLOW-LENGTH(FEET) =   496.00
  ELEVATION DATA: UPSTREAM(FEET) =   1615.00  DOWNSTREAM(FEET) =   1603.60

  Tc = K*[(LENGTH** 3.00)/(ELEVATION CHANGE)]**0.20
  SUBAREA ANALYSIS USED MINIMUM Tc(MIN.) =    8.250
  *  10 YEAR RAINFALL INTENSITY(INCH/HR) =  2.647
  SUBAREA Tc AND LOSS RATE DATA(AMC  II):
   DEVELOPMENT TYPE/      SCS SOIL   AREA      Fp         Ap     SCS   Tc
       LAND USE            GROUP   (ACRES)  (INCH/HR)  (DECIMAL)  CN  (MIN.)
  RESIDENTIAL
  "11+ DWELLINGS/ACRE"       A        0.14      0.98     0.200    32    8.25
  RESIDENTIAL
  "11+ DWELLINGS/ACRE"       B        2.70      0.75     0.200    56    8.25
  SUBAREA AVERAGE PERVIOUS LOSS RATE, Fp(INCH/HR) =  0.76
  SUBAREA AVERAGE PERVIOUS AREA FRACTION, Ap =  0.200
  SUBAREA RUNOFF(CFS) =      6.38
  TOTAL AREA(ACRES) =      2.84   PEAK FLOW RATE(CFS) =      6.38

****************************************************************************
  FLOW PROCESS FROM NODE      7.00 TO NODE      8.00 IS CODE =  31
----------------------------------------------------------------------------
  >>>>>COMPUTE PIPE-FLOW TRAVEL TIME THRU SUBAREA<<<<<
  >>>>>USING COMPUTER-ESTIMATED PIPESIZE (NON-PRESSURE FLOW)<<<<<
============================================================================
  ELEVATION DATA: UPSTREAM(FEET) =  1597.30  DOWNSTREAM(FEET) =  1597.00
  FLOW LENGTH(FEET) =    26.00   MANNING'S N =  0.013
  DEPTH OF FLOW IN  15.0 INCH PIPE IS  12.2 INCHES
  PIPE-FLOW VELOCITY(FEET/SEC.) =   5.95
  ESTIMATED PIPE DIAMETER(INCH) =  15.00    NUMBER OF PIPES =   1
  PIPE-FLOW(CFS) =       6.38
  PIPE TRAVEL TIME(MIN.) =   0.07    Tc(MIN.) =    8.32
  LONGEST FLOWPATH FROM NODE      6.00 TO NODE      8.00 =     522.00 FEET.

****************************************************************************
  FLOW PROCESS FROM NODE      8.00 TO NODE      8.00 IS CODE =   1
----------------------------------------------------------------------------
  >>>>>DESIGNATE INDEPENDENT STREAM FOR CONFLUENCE<<<<<
============================================================================
  TOTAL NUMBER OF STREAMS =  2
  CONFLUENCE VALUES USED FOR INDEPENDENT STREAM  1 ARE:
```

```
  TIME OF CONCENTRATION(MIN.) =    8.32
  RAINFALL INTENSITY(INCH/HR) =   2.63
  AREA-AVERAGED Fm(INCH/HR) =  0.15
  AREA-AVERAGED Fp(INCH/HR) =  0.76
  AREA-AVERAGED Ap =  0.20
  EFFECTIVE STREAM AREA(ACRES) =       2.84
  TOTAL STREAM AREA(ACRES) =       2.84
  PEAK FLOW RATE(CFS) AT CONFLUENCE =       6.38

****************************************************************************
  FLOW PROCESS FROM NODE      9.00 TO NODE     10.00 IS CODE =  21
----------------------------------------------------------------------------
  >>>>>RATIONAL METHOD INITIAL SUBAREA ANALYSIS<<<<<
  >>USE TIME-OF-CONCENTRATION NOMOGRAPH FOR INITIAL SUBAREA<<
============================================================================
  INITIAL SUBAREA FLOW-LENGTH(FEET) =   444.00
  ELEVATION DATA: UPSTREAM(FEET) =   1603.50  DOWNSTREAM(FEET) =   1601.30

  Tc = K*[(LENGTH** 3.00)/(ELEVATION CHANGE)]**0.20
  SUBAREA ANALYSIS USED MINIMUM Tc(MIN.) =   10.727
  *  10 YEAR RAINFALL INTENSITY(INCH/HR) =  2.261
  SUBAREA Tc AND LOSS RATE DATA(AMC  II):
   DEVELOPMENT TYPE/      SCS SOIL   AREA      Fp         Ap     SCS   Tc
       LAND USE            GROUP   (ACRES)  (INCH/HR)  (DECIMAL)  CN  (MIN.)
  RESIDENTIAL
  "11+ DWELLINGS/ACRE"       A        0.78      0.98     0.200    32   10.73
  RESIDENTIAL
  "11+ DWELLINGS/ACRE"       B        1.22      0.75     0.200    56   10.73
  SUBAREA AVERAGE PERVIOUS LOSS RATE, Fp(INCH/HR) =  0.84
  SUBAREA AVERAGE PERVIOUS AREA FRACTION, Ap =  0.200
  SUBAREA RUNOFF(CFS) =      3.77
  TOTAL AREA(ACRES) =      2.00   PEAK FLOW RATE(CFS) =      3.77

****************************************************************************
  FLOW PROCESS FROM NODE     10.00 TO NODE      8.00 IS CODE =  31
----------------------------------------------------------------------------
  >>>>>COMPUTE PIPE-FLOW TRAVEL TIME THRU SUBAREA<<<<<
  >>>>>USING COMPUTER-ESTIMATED PIPESIZE (NON-PRESSURE FLOW)<<<<<
============================================================================
  ELEVATION DATA: UPSTREAM(FEET) =  1597.80  DOWNSTREAM(FEET) =  1597.00
  FLOW LENGTH(FEET) =   165.00   MANNING'S N =  0.013
  DEPTH OF FLOW IN  15.0 INCH PIPE IS  11.2 INCHES
  PIPE-FLOW VELOCITY(FEET/SEC.) =   3.83
  ESTIMATED PIPE DIAMETER(INCH) =  15.00    NUMBER OF PIPES =   1
  PIPE-FLOW(CFS) =       3.77
  PIPE TRAVEL TIME(MIN.) =   0.72    Tc(MIN.) =   11.45
  LONGEST FLOWPATH FROM NODE      9.00 TO NODE      8.00 =     609.00 FEET.

****************************************************************************
  FLOW PROCESS FROM NODE      8.00 TO NODE      8.00 IS CODE =   1
----------------------------------------------------------------------------
  >>>>>DESIGNATE INDEPENDENT STREAM FOR CONFLUENCE<<<<<
  >>>>>AND COMPUTE VARIOUS CONFLUENCED STREAM VALUES<<<<<
============================================================================
  TOTAL NUMBER OF STREAMS =  2
  CONFLUENCE VALUES USED FOR INDEPENDENT STREAM  2 ARE:
  TIME OF CONCENTRATION(MIN.) =   11.45
  RAINFALL INTENSITY(INCH/HR) =   2.18
  AREA-AVERAGED Fm(INCH/HR) =  0.17
  AREA-AVERAGED Fp(INCH/HR) =  0.84
  AREA-AVERAGED Ap =  0.20
  EFFECTIVE STREAM AREA(ACRES) =       2.00
  TOTAL STREAM AREA(ACRES) =       2.00
```

```
  PEAK FLOW RATE(CFS) AT CONFLUENCE =       3.77

  ** CONFLUENCE DATA **
   STREAM       Q      Tc   Intensity   Fp(Fm)     Ap     Ae     HEADWATER
   NUMBER     (CFS)  (MIN.) (INCH/HR) (INCH/HR)         (ACRES)    NODE
      1        6.38    8.32    2.633  0.76( 0.15) 0.20       2.8       6.00
      2        3.77   11.45    2.175  0.84( 0.17) 0.20       2.0       9.00

  RAINFALL INTENSITY AND TIME OF CONCENTRATION RATIO
  CONFLUENCE FORMULA USED FOR  2 STREAMS.

  ** PEAK FLOW RATE TABLE **
   STREAM       Q      Tc   Intensity   Fp(Fm)     Ap     Ae     HEADWATER
   NUMBER     (CFS)  (MIN.) (INCH/HR) (INCH/HR)         (ACRES)    NODE
      1        9.74    8.32    2.633  0.79( 0.16) 0.20       4.3       6.00
      2        8.97   11.45    2.175  0.79( 0.16) 0.20       4.8       9.00

  COMPUTED CONFLUENCE ESTIMATES ARE AS FOLLOWS:
  PEAK FLOW RATE(CFS) =       9.74    Tc(MIN.) =     8.32
  EFFECTIVE AREA(ACRES) =       4.29   AREA-AVERAGED Fm(INCH/HR) =  0.16
  AREA-AVERAGED Fp(INCH/HR) =  0.79  AREA-AVERAGED Ap =  0.20
  TOTAL AREA(ACRES) =        4.8
  LONGEST FLOWPATH FROM NODE      9.00 TO NODE      8.00 =     609.00 FEET.

****************************************************************************
  FLOW PROCESS FROM NODE      8.00 TO NODE      3.00 IS CODE =  31
----------------------------------------------------------------------------
  >>>>>COMPUTE PIPE-FLOW TRAVEL TIME THRU SUBAREA<<<<<
  >>>>>USING COMPUTER-ESTIMATED PIPESIZE (NON-PRESSURE FLOW)<<<<<
============================================================================
  ELEVATION DATA: UPSTREAM(FEET) =  1597.00  DOWNSTREAM(FEET) =  1596.00
  FLOW LENGTH(FEET) =    37.00   MANNING'S N =  0.013
  DEPTH OF FLOW IN  15.0 INCH PIPE IS  12.2 INCHES
  PIPE-FLOW VELOCITY(FEET/SEC.) =   9.10
  ESTIMATED PIPE DIAMETER(INCH) =  15.00    NUMBER OF PIPES =   1
  PIPE-FLOW(CFS) =       9.74
  PIPE TRAVEL TIME(MIN.) =   0.07    Tc(MIN.) =    8.39
  LONGEST FLOWPATH FROM NODE      9.00 TO NODE      3.00 =     646.00 FEET.

****************************************************************************
  FLOW PROCESS FROM NODE      3.00 TO NODE      3.00 IS CODE =  11
----------------------------------------------------------------------------
  >>>>>CONFLUENCE MEMORY BANK # 1 WITH THE MAIN-STREAM MEMORY<<<<<
============================================================================

  ** MAIN STREAM CONFLUENCE DATA **
   STREAM       Q      Tc   Intensity   Fp(Fm)     Ap     Ae     HEADWATER
   NUMBER     (CFS)  (MIN.) (INCH/HR) (INCH/HR)         (ACRES)    NODE
      1        9.74    8.39    2.621  0.79( 0.16) 0.20       4.3       6.00
      2        8.97   11.51    2.167  0.79( 0.16) 0.20       4.8       9.00
  LONGEST FLOWPATH FROM NODE      9.00 TO NODE      3.00 =     646.00 FEET.

  ** MEMORY BANK #  1 CONFLUENCE DATA **
   STREAM       Q      Tc   Intensity   Fp(Fm)     Ap     Ae     HEADWATER
   NUMBER     (CFS)  (MIN.) (INCH/HR) (INCH/HR)         (ACRES)    NODE
      1        7.96    9.01    2.511  0.96( 0.19) 0.20       3.5       1.00
      2        7.53   10.89    2.241  0.96( 0.19) 0.20       3.8       4.00
  LONGEST FLOWPATH FROM NODE      1.00 TO NODE      3.00 =     679.00 FEET.

  ** PEAK FLOW RATE TABLE **
   STREAM       Q      Tc   Intensity   Fp(Fm)     Ap     Ae     HEADWATER
   NUMBER     (CFS)  (MIN.) (INCH/HR) (INCH/HR)         (ACRES)    NODE
      1       17.51    8.39    2.621  0.86( 0.17) 0.20       7.6       6.00
```

```
      2       17.55    9.01    2.511  0.87( 0.17) 0.20       7.9       1.00
      3       16.66   10.89    2.241  0.87( 0.17) 0.20       8.6       4.00
      4       16.24   11.51    2.167  0.87( 0.17) 0.20       8.7       9.00
    TOTAL AREA(ACRES) =         8.7

  COMPUTED CONFLUENCE ESTIMATES ARE AS FOLLOWS:
  PEAK FLOW RATE(CFS) =       17.55  Tc(MIN.) =    9.010
  EFFECTIVE AREA(ACRES) =      7.95  AREA-AVERAGED Fm(INCH/HR) =  0.17
  AREA-AVERAGED Fp(INCH/HR) =  0.87  AREA-AVERAGED Ap =  0.20
  TOTAL AREA(ACRES) =        8.7
  LONGEST FLOWPATH FROM NODE      1.00 TO NODE      3.00 =     679.00 FEET.

****************************************************************************
  FLOW PROCESS FROM NODE     11.00 TO NODE     12.00 IS CODE =  21
----------------------------------------------------------------------------
  >>>>>RATIONAL METHOD INITIAL SUBAREA ANALYSIS<<<<<
  >>USE TIME-OF-CONCENTRATION NOMOGRAPH FOR INITIAL SUBAREA<<
============================================================================
  INITIAL SUBAREA FLOW-LENGTH(FEET) =   205.00
  ELEVATION DATA: UPSTREAM(FEET) =   1601.30  DOWNSTREAM(FEET) =   1600.20

  Tc = K*[(LENGTH** 3.00)/(ELEVATION CHANGE)]**0.20
  SUBAREA ANALYSIS USED MINIMUM Tc(MIN.) =    7.750
  *  10 YEAR RAINFALL INTENSITY(INCH/HR) =  2.748
  SUBAREA Tc AND LOSS RATE DATA(AMC  II):
   DEVELOPMENT TYPE/      SCS SOIL   AREA      Fp         Ap     SCS   Tc
       LAND USE            GROUP   (ACRES)  (INCH/HR)  (DECIMAL)  CN  (MIN.)
  RESIDENTIAL
  "11+ DWELLINGS/ACRE"       A        0.28      0.98     0.200    32    7.75
  SUBAREA AVERAGE PERVIOUS LOSS RATE, Fp(INCH/HR) =  0.98
  SUBAREA AVERAGE PERVIOUS AREA FRACTION, Ap =  0.200
  SUBAREA RUNOFF(CFS) =      0.64
  TOTAL AREA(ACRES) =      0.28   PEAK FLOW RATE(CFS) =      0.64
============================================================================
  END OF STUDY SUMMARY:
  TOTAL AREA(ACRES)     =        0.3  TC(MIN.) =      7.75
  EFFECTIVE AREA(ACRES) =      0.28  AREA-AVERAGED Fm(INCH/HR)=  0.20
  AREA-AVERAGED Fp(INCH/HR) =  0.98  AREA-AVERAGED Ap = 0.200
  PEAK FLOW RATE(CFS)   =       0.64
============================================================================
============================================================================
  END OF RATIONAL METHOD ANALYSIS
```

```
****************************************************************************
             RATIONAL METHOD HYDROLOGY COMPUTER PROGRAM PACKAGE
          (Reference: 1986 SAN BERNARDINO CO. HYDROLOGY CRITERION)
         (c) Copyright 1983-2008 Advanced Engineering Software (aes)
             Ver. 15.0  Release Date: 04/01/2008  License ID 1420

                           Analysis prepared by:

                               CA Engineering
                        13821 Newport Ave., Ste 110
                             Tustin, Ca. 92780


 ************************** DESCRIPTION OF STUDY **************************
* PROPOSED CONDITION                                                       *
* 25 YR STORM                                                              *
*                                                                          *
 **************************************************************************

  FILE NAME: 816-1PR.DAT
  TIME/DATE OF STUDY: 08:49 07/13/2022
============================================================================
  USER SPECIFIED HYDROLOGY AND HYDRAULIC MODEL INFORMATION:
============================================================================
                    --*TIME-OF-CONCENTRATION MODEL*--

  USER SPECIFIED STORM EVENT(YEAR) =   25.00
  SPECIFIED MINIMUM PIPE SIZE(INCH) =  12.00
  SPECIFIED PERCENT OF GRADIENTS(DECIMAL) TO USE FOR FRICTION SLOPE = 0.85
  *USER-DEFINED LOGARITHMIC INTERPOLATION USED FOR RAINFALL*
  10-YEAR STORM 60-MINUTE INTENSITY(INCH/HOUR) =  0.797
  100-YEAR STORM 60-MINUTE INTENSITY(INCH/HOUR) =  1.350
  COMPUTED RAINFALL INTENSITY DATA:
  STORM EVENT =   25.00   1-HOUR INTENSITY(INCH/HOUR) = 0.9972
  SLOPE OF INTENSITY DURATION CURVE = 0.6000

  *ANTECEDENT MOISTURE CONDITION (AMC) II ASSUMED FOR RATIONAL METHOD*

  *USER-DEFINED STREET-SECTIONS FOR COUPLED PIPEFLOW AND STREETFLOW MODEL*
     HALF-  CROWN TO   STREET-CROSSFALL:   CURB  GUTTER-GEOMETRIES:  MANNING
     WIDTH  CROSSFALL  IN-  / OUT-/PARK-  HEIGHT  WIDTH  LIP   HIKE  FACTOR
NO.   (FT)     (FT)    SIDE / SIDE/ WAY    (FT)    (FT)  (FT)  (FT)    (n)
===  =====  =========  =================  ======  ===== ====== ===== =======
  1   30.0     20.0    0.018/0.018/0.020   0.67    2.00 0.0313 0.167 0.0150

  GLOBAL STREET FLOW-DEPTH CONSTRAINTS:
    1. Relative Flow-Depth =  0.00 FEET
       as (Maximum Allowable Street Flow Depth) - (Top-of-Curb)
    2. (Depth)*(Velocity) Constraint =  6.0 (FT*FT/S)
  *SIZE PIPE WITH A FLOW CAPACITY GREATER THAN
   OR EQUAL TO THE UPSTREAM TRIBUTARY PIPE.*
  *USER-SPECIFIED MINIMUM TOPOGRAPHIC SLOPE ADJUSTMENT NOT SELECTED

****************************************************************************
  FLOW PROCESS FROM NODE      1.00 TO NODE      2.00 IS CODE =  21
----------------------------------------------------------------------------
  >>>>>RATIONAL METHOD INITIAL SUBAREA ANALYSIS<<<<<
  >>USE TIME-OF-CONCENTRATION NOMOGRAPH FOR INITIAL SUBAREA<<
============================================================================
  INITIAL SUBAREA FLOW-LENGTH(FEET) =   485.00
  ELEVATION DATA: UPSTREAM(FEET) =   1616.10  DOWNSTREAM(FEET) =   1603.80
```

```
  Tc = K*[(LENGTH** 3.00)/(ELEVATION CHANGE)]**0.20
  SUBAREA ANALYSIS USED MINIMUM Tc(MIN.) =    8.017
  *  25 YEAR RAINFALL INTENSITY(INCH/HR) =  3.336
  SUBAREA Tc AND LOSS RATE DATA(AMC  II):
   DEVELOPMENT TYPE/      SCS SOIL   AREA      Fp         Ap     SCS   Tc
       LAND USE            GROUP   (ACRES)  (INCH/HR)  (DECIMAL)  CN  (MIN.)
  RESIDENTIAL
  "11+ DWELLINGS/ACRE"       A        2.11      0.98     0.200    32    8.02
  RESIDENTIAL
  "11+ DWELLINGS/ACRE"       B        0.17      0.75     0.200    56    8.02
  SUBAREA AVERAGE PERVIOUS LOSS RATE, Fp(INCH/HR) =  0.96
  SUBAREA AVERAGE PERVIOUS AREA FRACTION, Ap =  0.200
  SUBAREA RUNOFF(CFS) =      6.45
  TOTAL AREA(ACRES) =      2.28   PEAK FLOW RATE(CFS) =      6.45

****************************************************************************
  FLOW PROCESS FROM NODE      2.00 TO NODE      3.00 IS CODE =  31
----------------------------------------------------------------------------
  >>>>>COMPUTE PIPE-FLOW TRAVEL TIME THRU SUBAREA<<<<<
  >>>>>USING COMPUTER-ESTIMATED PIPESIZE (NON-PRESSURE FLOW)<<<<<
============================================================================
  ELEVATION DATA: UPSTREAM(FEET) =  1596.50  DOWNSTREAM(FEET) =  1596.00
  FLOW LENGTH(FEET) =    44.00   MANNING'S N =  0.013
  DEPTH OF FLOW IN  18.0 INCH PIPE IS  10.3 INCHES
  PIPE-FLOW VELOCITY(FEET/SEC.) =   6.16
  ESTIMATED PIPE DIAMETER(INCH) =  18.00    NUMBER OF PIPES =   1
  PIPE-FLOW(CFS) =       6.45
  PIPE TRAVEL TIME(MIN.) =   0.12    Tc(MIN.) =    8.14
  LONGEST FLOWPATH FROM NODE      1.00 TO NODE      3.00 =     529.00 FEET.

****************************************************************************
  FLOW PROCESS FROM NODE      3.00 TO NODE      3.00 IS CODE =   1
----------------------------------------------------------------------------
  >>>>>DESIGNATE INDEPENDENT STREAM FOR CONFLUENCE<<<<<
============================================================================
  TOTAL NUMBER OF STREAMS =  2
  CONFLUENCE VALUES USED FOR INDEPENDENT STREAM  1 ARE:
  TIME OF CONCENTRATION(MIN.) =    8.14
  RAINFALL INTENSITY(INCH/HR) =   3.31
  AREA-AVERAGED Fm(INCH/HR) =  0.19
  AREA-AVERAGED Fp(INCH/HR) =  0.96
  AREA-AVERAGED Ap =  0.20
  EFFECTIVE STREAM AREA(ACRES) =       2.28
  TOTAL STREAM AREA(ACRES) =       2.28
  PEAK FLOW RATE(CFS) AT CONFLUENCE =       6.45

****************************************************************************
  FLOW PROCESS FROM NODE      4.00 TO NODE      5.00 IS CODE =  21
----------------------------------------------------------------------------
  >>>>>RATIONAL METHOD INITIAL SUBAREA ANALYSIS<<<<<
  >>USE TIME-OF-CONCENTRATION NOMOGRAPH FOR INITIAL SUBAREA<<
============================================================================
  INITIAL SUBAREA FLOW-LENGTH(FEET) =   363.00
  ELEVATION DATA: UPSTREAM(FEET) =   1604.30  DOWNSTREAM(FEET) =   1602.50

  Tc = K*[(LENGTH** 3.00)/(ELEVATION CHANGE)]**0.20
  SUBAREA ANALYSIS USED MINIMUM Tc(MIN.) =    9.895
  *  25 YEAR RAINFALL INTENSITY(INCH/HR) =  2.940
  SUBAREA Tc AND LOSS RATE DATA(AMC  II):
   DEVELOPMENT TYPE/      SCS SOIL   AREA      Fp         Ap     SCS   Tc
       LAND USE            GROUP   (ACRES)  (INCH/HR)  (DECIMAL)  CN  (MIN.)
  RESIDENTIAL
  "11+ DWELLINGS/ACRE"       A        1.55      0.98     0.200    32    9.90
```

```
  SUBAREA AVERAGE PERVIOUS LOSS RATE, Fp(INCH/HR) =  0.97
  SUBAREA AVERAGE PERVIOUS AREA FRACTION, Ap =  0.200
  SUBAREA RUNOFF(CFS) =      3.83
  TOTAL AREA(ACRES) =      1.55   PEAK FLOW RATE(CFS) =      3.83

****************************************************************************
  FLOW PROCESS FROM NODE      5.00 TO NODE      3.00 IS CODE =  31
----------------------------------------------------------------------------
  >>>>>COMPUTE PIPE-FLOW TRAVEL TIME THRU SUBAREA<<<<<
  >>>>>USING COMPUTER-ESTIMATED PIPESIZE (NON-PRESSURE FLOW)<<<<<
============================================================================
  ELEVATION DATA: UPSTREAM(FEET) =  1596.50  DOWNSTREAM(FEET) =  1596.00
  FLOW LENGTH(FEET) =    32.00   MANNING'S N =  0.013
  DEPTH OF FLOW IN  12.0 INCH PIPE IS   9.2 INCHES
  PIPE-FLOW VELOCITY(FEET/SEC.) =   5.93
  ESTIMATED PIPE DIAMETER(INCH) =  12.00    NUMBER OF PIPES =   1
  PIPE-FLOW(CFS) =       3.83
  PIPE TRAVEL TIME(MIN.) =   0.09    Tc(MIN.) =    9.99
  LONGEST FLOWPATH FROM NODE      4.00 TO NODE      3.00 =     395.00 FEET.

****************************************************************************
  FLOW PROCESS FROM NODE      3.00 TO NODE      3.00 IS CODE =   1
----------------------------------------------------------------------------
  >>>>>DESIGNATE INDEPENDENT STREAM FOR CONFLUENCE<<<<<
  >>>>>AND COMPUTE VARIOUS CONFLUENCED STREAM VALUES<<<<<
============================================================================
  TOTAL NUMBER OF STREAMS =  2
  CONFLUENCE VALUES USED FOR INDEPENDENT STREAM  2 ARE:
  TIME OF CONCENTRATION(MIN.) =    9.99
  RAINFALL INTENSITY(INCH/HR) =   2.92
  AREA-AVERAGED Fm(INCH/HR) =  0.20
  AREA-AVERAGED Fp(INCH/HR) =  0.97
  AREA-AVERAGED Ap =  0.20
  EFFECTIVE STREAM AREA(ACRES) =       1.55
  TOTAL STREAM AREA(ACRES) =       1.55
  PEAK FLOW RATE(CFS) AT CONFLUENCE =       3.83

  ** CONFLUENCE DATA **
   STREAM       Q      Tc   Intensity   Fp(Fm)     Ap     Ae     HEADWATER
   NUMBER     (CFS)  (MIN.) (INCH/HR) (INCH/HR)         (ACRES)    NODE
      1        6.45    8.14    3.307  0.96( 0.19) 0.20       2.3       1.00
      2        3.83    9.99    2.924  0.97( 0.20) 0.20       1.5       4.00

  RAINFALL INTENSITY AND TIME OF CONCENTRATION RATIO
  CONFLUENCE FORMULA USED FOR  2 STREAMS.

  ** PEAK FLOW RATE TABLE **
   STREAM       Q      Tc   Intensity   Fp(Fm)     Ap     Ae     HEADWATER
   NUMBER     (CFS)  (MIN.) (INCH/HR) (INCH/HR)         (ACRES)    NODE
      1       10.01    8.14    3.307  0.96( 0.19) 0.20       3.5       1.00
      2        9.49    9.99    2.924  0.96( 0.19) 0.20       3.8       4.00

  COMPUTED CONFLUENCE ESTIMATES ARE AS FOLLOWS:
  PEAK FLOW RATE(CFS) =      10.01    Tc(MIN.) =     8.14
  EFFECTIVE AREA(ACRES) =       3.54   AREA-AVERAGED Fm(INCH/HR) =  0.19
  AREA-AVERAGED Fp(INCH/HR) =  0.96  AREA-AVERAGED Ap =  0.20
  TOTAL AREA(ACRES) =       3.8
  LONGEST FLOWPATH FROM NODE      1.00 TO NODE      3.00 =     529.00 FEET.

****************************************************************************
  FLOW PROCESS FROM NODE      3.00 TO NODE      3.00 IS CODE =  31
----------------------------------------------------------------------------
  >>>>>COMPUTE PIPE-FLOW TRAVEL TIME THRU SUBAREA<<<<<
```

```
  >>>>>USING COMPUTER-ESTIMATED PIPESIZE (NON-PRESSURE FLOW)<<<<<
============================================================================
  ELEVATION DATA: UPSTREAM(FEET) =  1596.20  DOWNSTREAM(FEET) =  1596.00
  FLOW LENGTH(FEET) =   150.00   MANNING'S N =  0.013
  DEPTH OF FLOW IN  27.0 INCH PIPE IS  21.2 INCHES
  PIPE-FLOW VELOCITY(FEET/SEC.) =   2.99
  ESTIMATED PIPE DIAMETER(INCH) =  27.00    NUMBER OF PIPES =   1
  PIPE-FLOW(CFS) =      10.01
  PIPE TRAVEL TIME(MIN.) =   0.84    Tc(MIN.) =    8.97
  LONGEST FLOWPATH FROM NODE      1.00 TO NODE      3.00 =     679.00 FEET.

****************************************************************************
  FLOW PROCESS FROM NODE      3.00 TO NODE      3.00 IS CODE =  10
----------------------------------------------------------------------------
  >>>>>MAIN-STREAM MEMORY COPIED ONTO MEMORY BANK # 1 <<<<<
============================================================================

****************************************************************************
  FLOW PROCESS FROM NODE      6.00 TO NODE      7.00 IS CODE =  21
----------------------------------------------------------------------------
  >>>>>RATIONAL METHOD INITIAL SUBAREA ANALYSIS<<<<<
  >>USE TIME-OF-CONCENTRATION NOMOGRAPH FOR INITIAL SUBAREA<<
============================================================================
  INITIAL SUBAREA FLOW-LENGTH(FEET) =   496.00
  ELEVATION DATA: UPSTREAM(FEET) =   1615.00  DOWNSTREAM(FEET) =   1603.60

  Tc = K*[(LENGTH** 3.00)/(ELEVATION CHANGE)]**0.20
  SUBAREA ANALYSIS USED MINIMUM Tc(MIN.) =    8.250
  *  25 YEAR RAINFALL INTENSITY(INCH/HR) =  3.279
  SUBAREA Tc AND LOSS RATE DATA(AMC  II):
   DEVELOPMENT TYPE/      SCS SOIL   AREA      Fp         Ap     SCS   Tc
       LAND USE            GROUP   (ACRES)  (INCH/HR)  (DECIMAL)  CN  (MIN.)
  RESIDENTIAL
  "11+ DWELLINGS/ACRE"       A        0.14      0.98     0.200    32    8.25
  RESIDENTIAL
  "11+ DWELLINGS/ACRE"       B        2.70      0.75     0.200    56    8.25
  SUBAREA AVERAGE PERVIOUS LOSS RATE, Fp(INCH/HR) =  0.76
  SUBAREA AVERAGE PERVIOUS AREA FRACTION, Ap =  0.200
  SUBAREA RUNOFF(CFS) =      7.99
  TOTAL AREA(ACRES) =      2.84   PEAK FLOW RATE(CFS) =      7.99

****************************************************************************
  FLOW PROCESS FROM NODE      7.00 TO NODE      8.00 IS CODE =  31
----------------------------------------------------------------------------
  >>>>>COMPUTE PIPE-FLOW TRAVEL TIME THRU SUBAREA<<<<<
  >>>>>USING COMPUTER-ESTIMATED PIPESIZE (NON-PRESSURE FLOW)<<<<<
============================================================================
  ELEVATION DATA: UPSTREAM(FEET) =  1597.30  DOWNSTREAM(FEET) =  1597.00
  FLOW LENGTH(FEET) =    26.00   MANNING'S N =  0.013
  DEPTH OF FLOW IN  18.0 INCH PIPE IS  11.8 INCHES
  PIPE-FLOW VELOCITY(FEET/SEC.) =   6.49
  ESTIMATED PIPE DIAMETER(INCH) =  18.00    NUMBER OF PIPES =   1
  PIPE-FLOW(CFS) =       7.99
  PIPE TRAVEL TIME(MIN.) =   0.07    Tc(MIN.) =    8.32
  LONGEST FLOWPATH FROM NODE      6.00 TO NODE      8.00 =     522.00 FEET.

****************************************************************************
  FLOW PROCESS FROM NODE      8.00 TO NODE      8.00 IS CODE =   1
----------------------------------------------------------------------------
  >>>>>DESIGNATE INDEPENDENT STREAM FOR CONFLUENCE<<<<<
============================================================================
  TOTAL NUMBER OF STREAMS =  2
  CONFLUENCE VALUES USED FOR INDEPENDENT STREAM  1 ARE:
```

```
  TIME OF CONCENTRATION(MIN.) =    8.32
  RAINFALL INTENSITY(INCH/HR) =   3.26
  AREA-AVERAGED Fm(INCH/HR) =  0.15
  AREA-AVERAGED Fp(INCH/HR) =  0.76
  AREA-AVERAGED Ap =  0.20
  EFFECTIVE STREAM AREA(ACRES) =       2.84
  TOTAL STREAM AREA(ACRES) =       2.84
  PEAK FLOW RATE(CFS) AT CONFLUENCE =       7.99

****************************************************************************
  FLOW PROCESS FROM NODE      9.00 TO NODE     10.00 IS CODE =  21
----------------------------------------------------------------------------
  >>>>>RATIONAL METHOD INITIAL SUBAREA ANALYSIS<<<<<
  >>USE TIME-OF-CONCENTRATION NOMOGRAPH FOR INITIAL SUBAREA<<
============================================================================
  INITIAL SUBAREA FLOW-LENGTH(FEET) =   444.00
  ELEVATION DATA: UPSTREAM(FEET) =   1603.50  DOWNSTREAM(FEET) =   1601.30

  Tc = K*[(LENGTH** 3.00)/(ELEVATION CHANGE)]**0.20
  SUBAREA ANALYSIS USED MINIMUM Tc(MIN.) =   10.727
  *  25 YEAR RAINFALL INTENSITY(INCH/HR) =  2.801
  SUBAREA Tc AND LOSS RATE DATA(AMC  II):
   DEVELOPMENT TYPE/      SCS SOIL   AREA      Fp         Ap     SCS   Tc
       LAND USE            GROUP   (ACRES)  (INCH/HR)  (DECIMAL)  CN  (MIN.)
  RESIDENTIAL
  "11+ DWELLINGS/ACRE"       A        0.78      0.98     0.200    32   10.73
  RESIDENTIAL
  "11+ DWELLINGS/ACRE"       B        1.22      0.75     0.200    56   10.73
  SUBAREA AVERAGE PERVIOUS LOSS RATE, Fp(INCH/HR) =  0.84
  SUBAREA AVERAGE PERVIOUS AREA FRACTION, Ap =  0.200
  SUBAREA RUNOFF(CFS) =      4.74
  TOTAL AREA(ACRES) =      2.00   PEAK FLOW RATE(CFS) =      4.74

****************************************************************************
  FLOW PROCESS FROM NODE     10.00 TO NODE      8.00 IS CODE =  31
----------------------------------------------------------------------------
  >>>>>COMPUTE PIPE-FLOW TRAVEL TIME THRU SUBAREA<<<<<
  >>>>>USING COMPUTER-ESTIMATED PIPESIZE (NON-PRESSURE FLOW)<<<<<
============================================================================
  ELEVATION DATA: UPSTREAM(FEET) =  1597.80  DOWNSTREAM(FEET) =  1597.00
  FLOW LENGTH(FEET) =   165.00   MANNING'S N =  0.013
  DEPTH OF FLOW IN  18.0 INCH PIPE IS  11.1 INCHES
  PIPE-FLOW VELOCITY(FEET/SEC.) =   4.14
  ESTIMATED PIPE DIAMETER(INCH) =  18.00    NUMBER OF PIPES =   1
  PIPE-FLOW(CFS) =       4.74
  PIPE TRAVEL TIME(MIN.) =   0.66    Tc(MIN.) =   11.39
  LONGEST FLOWPATH FROM NODE      9.00 TO NODE      8.00 =     609.00 FEET.

****************************************************************************
  FLOW PROCESS FROM NODE      8.00 TO NODE      8.00 IS CODE =   1
----------------------------------------------------------------------------
  >>>>>DESIGNATE INDEPENDENT STREAM FOR CONFLUENCE<<<<<
  >>>>>AND COMPUTE VARIOUS CONFLUENCED STREAM VALUES<<<<<
============================================================================
  TOTAL NUMBER OF STREAMS =  2
  CONFLUENCE VALUES USED FOR INDEPENDENT STREAM  2 ARE:
  TIME OF CONCENTRATION(MIN.) =   11.39
  RAINFALL INTENSITY(INCH/HR) =   2.70
  AREA-AVERAGED Fm(INCH/HR) =  0.17
  AREA-AVERAGED Fp(INCH/HR) =  0.84
  AREA-AVERAGED Ap =  0.20
  EFFECTIVE STREAM AREA(ACRES) =       2.00
  TOTAL STREAM AREA(ACRES) =       2.00
```

```
  PEAK FLOW RATE(CFS) AT CONFLUENCE =       4.74

  ** CONFLUENCE DATA **
   STREAM       Q      Tc   Intensity   Fp(Fm)     Ap     Ae     HEADWATER
   NUMBER     (CFS)  (MIN.) (INCH/HR) (INCH/HR)         (ACRES)    NODE
      1        7.99    8.32    3.264  0.76( 0.15) 0.20       2.8       6.00
      2        4.74   11.39    2.702  0.84( 0.17) 0.20       2.0       9.00

  RAINFALL INTENSITY AND TIME OF CONCENTRATION RATIO
  CONFLUENCE FORMULA USED FOR  2 STREAMS.

  ** PEAK FLOW RATE TABLE **
   STREAM       Q      Tc   Intensity   Fp(Fm)     Ap     Ae     HEADWATER
   NUMBER     (CFS)  (MIN.) (INCH/HR) (INCH/HR)         (ACRES)    NODE
      1       12.22    8.32    3.264  0.79( 0.16) 0.20       4.3       6.00
      2       11.29   11.39    2.702  0.79( 0.16) 0.20       4.8       9.00

  COMPUTED CONFLUENCE ESTIMATES ARE AS FOLLOWS:
  PEAK FLOW RATE(CFS) =      12.22    Tc(MIN.) =     8.32
  EFFECTIVE AREA(ACRES) =       4.30   AREA-AVERAGED Fm(INCH/HR) =  0.16
  AREA-AVERAGED Fp(INCH/HR) =  0.79  AREA-AVERAGED Ap =  0.20
  TOTAL AREA(ACRES) =        4.8
  LONGEST FLOWPATH FROM NODE      9.00 TO NODE      8.00 =     609.00 FEET.

****************************************************************************
  FLOW PROCESS FROM NODE      8.00 TO NODE      3.00 IS CODE =  31
----------------------------------------------------------------------------
  >>>>>COMPUTE PIPE-FLOW TRAVEL TIME THRU SUBAREA<<<<<
  >>>>>USING COMPUTER-ESTIMATED PIPESIZE (NON-PRESSURE FLOW)<<<<<
============================================================================
  ELEVATION DATA: UPSTREAM(FEET) =  1597.00  DOWNSTREAM(FEET) =  1596.00
  FLOW LENGTH(FEET) =    37.00   MANNING'S N =  0.013
  DEPTH OF FLOW IN  18.0 INCH PIPE IS  11.8 INCHES
  PIPE-FLOW VELOCITY(FEET/SEC.) =   9.93
  ESTIMATED PIPE DIAMETER(INCH) =  18.00    NUMBER OF PIPES =   1
  PIPE-FLOW(CFS) =      12.22
  PIPE TRAVEL TIME(MIN.) =   0.06    Tc(MIN.) =    8.38
  LONGEST FLOWPATH FROM NODE      9.00 TO NODE      3.00 =     646.00 FEET.

****************************************************************************
  FLOW PROCESS FROM NODE      3.00 TO NODE      3.00 IS CODE =  11
----------------------------------------------------------------------------
  >>>>>CONFLUENCE MEMORY BANK # 1 WITH THE MAIN-STREAM MEMORY<<<<<
============================================================================

  ** MAIN STREAM CONFLUENCE DATA **
   STREAM       Q      Tc   Intensity   Fp(Fm)     Ap     Ae     HEADWATER
   NUMBER     (CFS)  (MIN.) (INCH/HR) (INCH/HR)         (ACRES)    NODE
      1       12.22    8.38    3.249  0.79( 0.16) 0.20       4.3       6.00
      2       11.29   11.46    2.693  0.79( 0.16) 0.20       4.8       9.00
  LONGEST FLOWPATH FROM NODE      9.00 TO NODE      3.00 =     646.00 FEET.

  ** MEMORY BANK #  1 CONFLUENCE DATA **
   STREAM       Q      Tc   Intensity   Fp(Fm)     Ap     Ae     HEADWATER
   NUMBER     (CFS)  (MIN.) (INCH/HR) (INCH/HR)         (ACRES)    NODE
      1       10.01    8.97    3.118  0.96( 0.19) 0.20       3.5       1.00
      2        9.49   10.83    2.786  0.96( 0.19) 0.20       3.8       4.00
  LONGEST FLOWPATH FROM NODE      1.00 TO NODE      3.00 =     679.00 FEET.

  ** PEAK FLOW RATE TABLE **
   STREAM       Q      Tc   Intensity   Fp(Fm)     Ap     Ae     HEADWATER
   NUMBER     (CFS)  (MIN.) (INCH/HR) (INCH/HR)         (ACRES)    NODE
      1       21.99    8.38    3.249  0.86( 0.17) 0.20       7.6       6.00
```

```
     2       22.05    8.97    3.118  0.87( 0.17) 0.20       7.9       1.00
     3       20.97   10.83    2.786  0.87( 0.17) 0.20       8.6       4.00
     4       20.44   11.46    2.693  0.87( 0.17) 0.20       8.7       9.00
   TOTAL AREA(ACRES) =         8.7

  COMPUTED CONFLUENCE ESTIMATES ARE AS FOLLOWS:
  PEAK FLOW RATE(CFS) =       22.05  Tc(MIN.) =    8.973
  EFFECTIVE AREA(ACRES) =      7.95  AREA-AVERAGED Fm(INCH/HR) =  0.17
  AREA-AVERAGED Fp(INCH/HR) =  0.87  AREA-AVERAGED Ap =  0.20
  TOTAL AREA(ACRES) =        8.7
  LONGEST FLOWPATH FROM NODE      1.00 TO NODE      3.00 =     679.00 FEET.

****************************************************************************
  FLOW PROCESS FROM NODE     11.00 TO NODE     12.00 IS CODE =  21
----------------------------------------------------------------------------
  >>>>>RATIONAL METHOD INITIAL SUBAREA ANALYSIS<<<<<
  >>USE TIME-OF-CONCENTRATION NOMOGRAPH FOR INITIAL SUBAREA<<
============================================================================
  INITIAL SUBAREA FLOW-LENGTH(FEET) =   205.00
  ELEVATION DATA: UPSTREAM(FEET) =   1601.30  DOWNSTREAM(FEET) =   1600.20

  Tc = K*[(LENGTH** 3.00)/(ELEVATION CHANGE)]**0.20
  SUBAREA ANALYSIS USED MINIMUM Tc(MIN.) =    7.750
  *  25 YEAR RAINFALL INTENSITY(INCH/HR) =  3.405
  SUBAREA Tc AND LOSS RATE DATA(AMC  II):
   DEVELOPMENT TYPE/      SCS SOIL   AREA      Fp         Ap     SCS   Tc
       LAND USE            GROUP   (ACRES)  (INCH/HR)  (DECIMAL)  CN  (MIN.)
  RESIDENTIAL
  "11+ DWELLINGS/ACRE"       A        0.28      0.98     0.200    32    7.75
  SUBAREA AVERAGE PERVIOUS LOSS RATE, Fp(INCH/HR) =  0.98
  SUBAREA AVERAGE PERVIOUS AREA FRACTION, Ap =  0.200
  SUBAREA RUNOFF(CFS) =      0.81
  TOTAL AREA(ACRES) =      0.28   PEAK FLOW RATE(CFS) =      0.81
============================================================================
  END OF STUDY SUMMARY:
  TOTAL AREA(ACRES)     =        0.3  TC(MIN.) =      7.75
  EFFECTIVE AREA(ACRES) =      0.28  AREA-AVERAGED Fm(INCH/HR)=  0.20
  AREA-AVERAGED Fp(INCH/HR) =  0.98  AREA-AVERAGED Ap = 0.200
  PEAK FLOW RATE(CFS)   =       0.81
============================================================================
============================================================================
  END OF RATIONAL METHOD ANALYSIS
```

```
****************************************************************************
             RATIONAL METHOD HYDROLOGY COMPUTER PROGRAM PACKAGE
          (Reference: 1986 SAN BERNARDINO CO. HYDROLOGY CRITERION)
         (c) Copyright 1983-2008 Advanced Engineering Software (aes)
             Ver. 15.0  Release Date: 04/01/2008  License ID 1420

                           Analysis prepared by:

                               CA Engineering
                        13821 Newport Ave., Ste 110
                             Tustin, Ca. 92780


 ************************** DESCRIPTION OF STUDY **************************
* PROPOSED CONDITION                                                       *
* 100 YR STORM                                                             *
*                                                                          *
 **************************************************************************

  FILE NAME: 816-1PR.DAT
  TIME/DATE OF STUDY: 08:50 07/13/2022
============================================================================
  USER SPECIFIED HYDROLOGY AND HYDRAULIC MODEL INFORMATION:
============================================================================
                    --*TIME-OF-CONCENTRATION MODEL*--

  USER SPECIFIED STORM EVENT(YEAR) =  100.00
  SPECIFIED MINIMUM PIPE SIZE(INCH) =  12.00
  SPECIFIED PERCENT OF GRADIENTS(DECIMAL) TO USE FOR FRICTION SLOPE = 0.85
  *USER-DEFINED LOGARITHMIC INTERPOLATION USED FOR RAINFALL*
  10-YEAR STORM 60-MINUTE INTENSITY(INCH/HOUR) =  0.797
  100-YEAR STORM 60-MINUTE INTENSITY(INCH/HOUR) =  1.350
  COMPUTED RAINFALL INTENSITY DATA:
  STORM EVENT =  100.00   1-HOUR INTENSITY(INCH/HOUR) = 1.3500
  SLOPE OF INTENSITY DURATION CURVE = 0.6000

  *ANTECEDENT MOISTURE CONDITION (AMC) III ASSUMED FOR RATIONAL METHOD*

  *USER-DEFINED STREET-SECTIONS FOR COUPLED PIPEFLOW AND STREETFLOW MODEL*
     HALF-  CROWN TO   STREET-CROSSFALL:   CURB  GUTTER-GEOMETRIES:  MANNING
     WIDTH  CROSSFALL  IN-  / OUT-/PARK-  HEIGHT  WIDTH  LIP   HIKE  FACTOR
NO.   (FT)     (FT)    SIDE / SIDE/ WAY    (FT)    (FT)  (FT)  (FT)    (n)
===  =====  =========  =================  ======  ===== ====== ===== =======
  1   30.0     20.0    0.018/0.018/0.020   0.67    2.00 0.0313 0.167 0.0150

  GLOBAL STREET FLOW-DEPTH CONSTRAINTS:
    1. Relative Flow-Depth =  0.00 FEET
       as (Maximum Allowable Street Flow Depth) - (Top-of-Curb)
    2. (Depth)*(Velocity) Constraint =  6.0 (FT*FT/S)
  *SIZE PIPE WITH A FLOW CAPACITY GREATER THAN
   OR EQUAL TO THE UPSTREAM TRIBUTARY PIPE.*
  *USER-SPECIFIED MINIMUM TOPOGRAPHIC SLOPE ADJUSTMENT NOT SELECTED

****************************************************************************
  FLOW PROCESS FROM NODE      1.00 TO NODE      2.00 IS CODE =  21
----------------------------------------------------------------------------
  >>>>>RATIONAL METHOD INITIAL SUBAREA ANALYSIS<<<<<
  >>USE TIME-OF-CONCENTRATION NOMOGRAPH FOR INITIAL SUBAREA<<
============================================================================
  INITIAL SUBAREA FLOW-LENGTH(FEET) =   485.00
  ELEVATION DATA: UPSTREAM(FEET) =   1616.10  DOWNSTREAM(FEET) =   1603.80
```

```
  Tc = K*[(LENGTH** 3.00)/(ELEVATION CHANGE)]**0.20
  SUBAREA ANALYSIS USED MINIMUM Tc(MIN.) =    8.017
  * 100 YEAR RAINFALL INTENSITY(INCH/HR) =  4.517
  SUBAREA Tc AND LOSS RATE DATA(AMC III):
   DEVELOPMENT TYPE/      SCS SOIL   AREA      Fp         Ap     SCS   Tc
       LAND USE            GROUP   (ACRES)  (INCH/HR)  (DECIMAL)  CN  (MIN.)
  RESIDENTIAL
  "11+ DWELLINGS/ACRE"       A        2.11      0.74     0.200    52    8.02
  RESIDENTIAL
  "11+ DWELLINGS/ACRE"       B        0.17      0.42     0.200    76    8.02
  SUBAREA AVERAGE PERVIOUS LOSS RATE, Fp(INCH/HR) =  0.72
  SUBAREA AVERAGE PERVIOUS AREA FRACTION, Ap =  0.200
  SUBAREA RUNOFF(CFS) =      8.97
  TOTAL AREA(ACRES) =      2.28   PEAK FLOW RATE(CFS) =      8.97

****************************************************************************
  FLOW PROCESS FROM NODE      2.00 TO NODE      3.00 IS CODE =  31
----------------------------------------------------------------------------
  >>>>>COMPUTE PIPE-FLOW TRAVEL TIME THRU SUBAREA<<<<<
  >>>>>USING COMPUTER-ESTIMATED PIPESIZE (NON-PRESSURE FLOW)<<<<<
============================================================================
  ELEVATION DATA: UPSTREAM(FEET) =  1596.50  DOWNSTREAM(FEET) =  1596.00
  FLOW LENGTH(FEET) =    44.00   MANNING'S N =  0.013
  DEPTH OF FLOW IN  18.0 INCH PIPE IS  13.0 INCHES
  PIPE-FLOW VELOCITY(FEET/SEC.) =   6.58
  ESTIMATED PIPE DIAMETER(INCH) =  18.00    NUMBER OF PIPES =   1
  PIPE-FLOW(CFS) =       8.97
  PIPE TRAVEL TIME(MIN.) =   0.11    Tc(MIN.) =    8.13
  LONGEST FLOWPATH FROM NODE      1.00 TO NODE      3.00 =     529.00 FEET.

****************************************************************************
  FLOW PROCESS FROM NODE      3.00 TO NODE      3.00 IS CODE =   1
----------------------------------------------------------------------------
  >>>>>DESIGNATE INDEPENDENT STREAM FOR CONFLUENCE<<<<<
============================================================================
  TOTAL NUMBER OF STREAMS =  2
  CONFLUENCE VALUES USED FOR INDEPENDENT STREAM  1 ARE:
  TIME OF CONCENTRATION(MIN.) =    8.13
  RAINFALL INTENSITY(INCH/HR) =   4.48
  AREA-AVERAGED Fm(INCH/HR) =  0.14
  AREA-AVERAGED Fp(INCH/HR) =  0.72
  AREA-AVERAGED Ap =  0.20
  EFFECTIVE STREAM AREA(ACRES) =       2.28
  TOTAL STREAM AREA(ACRES) =       2.28
  PEAK FLOW RATE(CFS) AT CONFLUENCE =       8.97

****************************************************************************
  FLOW PROCESS FROM NODE      4.00 TO NODE      5.00 IS CODE =  21
----------------------------------------------------------------------------
  >>>>>RATIONAL METHOD INITIAL SUBAREA ANALYSIS<<<<<
  >>USE TIME-OF-CONCENTRATION NOMOGRAPH FOR INITIAL SUBAREA<<
============================================================================
  INITIAL SUBAREA FLOW-LENGTH(FEET) =   363.00
  ELEVATION DATA: UPSTREAM(FEET) =   1604.30  DOWNSTREAM(FEET) =   1602.50

  Tc = K*[(LENGTH** 3.00)/(ELEVATION CHANGE)]**0.20
  SUBAREA ANALYSIS USED MINIMUM Tc(MIN.) =    9.895
  * 100 YEAR RAINFALL INTENSITY(INCH/HR) =  3.981
  SUBAREA Tc AND LOSS RATE DATA(AMC III):
   DEVELOPMENT TYPE/      SCS SOIL   AREA      Fp         Ap     SCS   Tc
       LAND USE            GROUP   (ACRES)  (INCH/HR)  (DECIMAL)  CN  (MIN.)
  RESIDENTIAL
  "11+ DWELLINGS/ACRE"       A        1.55      0.74     0.200    52    9.90
```

```
  SUBAREA AVERAGE PERVIOUS LOSS RATE, Fp(INCH/HR) =  0.74
  SUBAREA AVERAGE PERVIOUS AREA FRACTION, Ap =  0.200
  SUBAREA RUNOFF(CFS) =      5.35
  TOTAL AREA(ACRES) =      1.55   PEAK FLOW RATE(CFS) =      5.35

****************************************************************************
  FLOW PROCESS FROM NODE      5.00 TO NODE      3.00 IS CODE =  31
----------------------------------------------------------------------------
  >>>>>COMPUTE PIPE-FLOW TRAVEL TIME THRU SUBAREA<<<<<
  >>>>>USING COMPUTER-ESTIMATED PIPESIZE (NON-PRESSURE FLOW)<<<<<
============================================================================
  ELEVATION DATA: UPSTREAM(FEET) =  1596.50  DOWNSTREAM(FEET) =  1596.00
  FLOW LENGTH(FEET) =    32.00   MANNING'S N =  0.013
  DEPTH OF FLOW IN  15.0 INCH PIPE IS   9.4 INCHES
  PIPE-FLOW VELOCITY(FEET/SEC.) =   6.59
  ESTIMATED PIPE DIAMETER(INCH) =  15.00    NUMBER OF PIPES =   1
  PIPE-FLOW(CFS) =       5.35
  PIPE TRAVEL TIME(MIN.) =   0.08    Tc(MIN.) =    9.98
  LONGEST FLOWPATH FROM NODE      4.00 TO NODE      3.00 =     395.00 FEET.

****************************************************************************
  FLOW PROCESS FROM NODE      3.00 TO NODE      3.00 IS CODE =   1
----------------------------------------------------------------------------
  >>>>>DESIGNATE INDEPENDENT STREAM FOR CONFLUENCE<<<<<
  >>>>>AND COMPUTE VARIOUS CONFLUENCED STREAM VALUES<<<<<
============================================================================
  TOTAL NUMBER OF STREAMS =  2
  CONFLUENCE VALUES USED FOR INDEPENDENT STREAM  2 ARE:
  TIME OF CONCENTRATION(MIN.) =    9.98
  RAINFALL INTENSITY(INCH/HR) =   3.96
  AREA-AVERAGED Fm(INCH/HR) =  0.15
  AREA-AVERAGED Fp(INCH/HR) =  0.74
  AREA-AVERAGED Ap =  0.20
  EFFECTIVE STREAM AREA(ACRES) =       1.55
  TOTAL STREAM AREA(ACRES) =       1.55
  PEAK FLOW RATE(CFS) AT CONFLUENCE =       5.35

  ** CONFLUENCE DATA **
   STREAM       Q      Tc   Intensity   Fp(Fm)     Ap     Ae     HEADWATER
   NUMBER     (CFS)  (MIN.) (INCH/HR) (INCH/HR)         (ACRES)    NODE
      1        8.97    8.13    4.479  0.72( 0.14) 0.20       2.3       1.00
      2        5.35    9.98    3.961  0.74( 0.15) 0.20       1.5       4.00

  RAINFALL INTENSITY AND TIME OF CONCENTRATION RATIO
  CONFLUENCE FORMULA USED FOR  2 STREAMS.

  ** PEAK FLOW RATE TABLE **
   STREAM       Q      Tc   Intensity   Fp(Fm)     Ap     Ae     HEADWATER
   NUMBER     (CFS)  (MIN.) (INCH/HR) (INCH/HR)         (ACRES)    NODE
      1       13.92    8.13    4.479  0.73( 0.15) 0.20       3.5       1.00
      2       13.25    9.98    3.961  0.73( 0.15) 0.20       3.8       4.00

  COMPUTED CONFLUENCE ESTIMATES ARE AS FOLLOWS:
  PEAK FLOW RATE(CFS) =      13.92    Tc(MIN.) =     8.13
  EFFECTIVE AREA(ACRES) =       3.54   AREA-AVERAGED Fm(INCH/HR) =  0.15
  AREA-AVERAGED Fp(INCH/HR) =  0.73  AREA-AVERAGED Ap =  0.20
  TOTAL AREA(ACRES) =        3.8
  LONGEST FLOWPATH FROM NODE      1.00 TO NODE      3.00 =     529.00 FEET.

****************************************************************************
  FLOW PROCESS FROM NODE      3.00 TO NODE      3.00 IS CODE =  31
----------------------------------------------------------------------------
  >>>>>COMPUTE PIPE-FLOW TRAVEL TIME THRU SUBAREA<<<<<
```

```
  >>>>>USING COMPUTER-ESTIMATED PIPESIZE (NON-PRESSURE FLOW)<<<<<
============================================================================
  ELEVATION DATA: UPSTREAM(FEET) =  1596.20  DOWNSTREAM(FEET) =  1596.00
  FLOW LENGTH(FEET) =   150.00   MANNING'S N =  0.013
  DEPTH OF FLOW IN  33.0 INCH PIPE IS  22.0 INCHES
  PIPE-FLOW VELOCITY(FEET/SEC.) =   3.32
  ESTIMATED PIPE DIAMETER(INCH) =  33.00    NUMBER OF PIPES =   1
  PIPE-FLOW(CFS) =      13.92
  PIPE TRAVEL TIME(MIN.) =   0.75    Tc(MIN.) =    8.88
  LONGEST FLOWPATH FROM NODE      1.00 TO NODE      3.00 =     679.00 FEET.

****************************************************************************
  FLOW PROCESS FROM NODE      3.00 TO NODE      3.00 IS CODE =  10
----------------------------------------------------------------------------
  >>>>>MAIN-STREAM MEMORY COPIED ONTO MEMORY BANK # 1 <<<<<
============================================================================

****************************************************************************
  FLOW PROCESS FROM NODE      6.00 TO NODE      7.00 IS CODE =  21
----------------------------------------------------------------------------
  >>>>>RATIONAL METHOD INITIAL SUBAREA ANALYSIS<<<<<
  >>USE TIME-OF-CONCENTRATION NOMOGRAPH FOR INITIAL SUBAREA<<
============================================================================
  INITIAL SUBAREA FLOW-LENGTH(FEET) =   496.00
  ELEVATION DATA: UPSTREAM(FEET) =   1615.00  DOWNSTREAM(FEET) =   1603.60

  Tc = K*[(LENGTH** 3.00)/(ELEVATION CHANGE)]**0.20
  SUBAREA ANALYSIS USED MINIMUM Tc(MIN.) =    8.250
  * 100 YEAR RAINFALL INTENSITY(INCH/HR) =  4.440
  SUBAREA Tc AND LOSS RATE DATA(AMC III):
   DEVELOPMENT TYPE/      SCS SOIL   AREA      Fp         Ap     SCS   Tc
       LAND USE            GROUP   (ACRES)  (INCH/HR)  (DECIMAL)  CN  (MIN.)
  RESIDENTIAL
  "11+ DWELLINGS/ACRE"       A        0.14      0.74     0.200    52    8.25
  RESIDENTIAL
  "11+ DWELLINGS/ACRE"       B        2.70      0.42     0.200    76    8.25
  SUBAREA AVERAGE PERVIOUS LOSS RATE, Fp(INCH/HR) =  0.44
  SUBAREA AVERAGE PERVIOUS AREA FRACTION, Ap =  0.200
  SUBAREA RUNOFF(CFS) =     11.12
  TOTAL AREA(ACRES) =      2.84   PEAK FLOW RATE(CFS) =     11.12

****************************************************************************
  FLOW PROCESS FROM NODE      7.00 TO NODE      8.00 IS CODE =  31
----------------------------------------------------------------------------
  >>>>>COMPUTE PIPE-FLOW TRAVEL TIME THRU SUBAREA<<<<<
  >>>>>USING COMPUTER-ESTIMATED PIPESIZE (NON-PRESSURE FLOW)<<<<<
============================================================================
  ELEVATION DATA: UPSTREAM(FEET) =  1597.30  DOWNSTREAM(FEET) =  1597.00
  FLOW LENGTH(FEET) =    26.00   MANNING'S N =  0.013
  DEPTH OF FLOW IN  21.0 INCH PIPE IS  13.1 INCHES
  PIPE-FLOW VELOCITY(FEET/SEC.) =   7.08
  ESTIMATED PIPE DIAMETER(INCH) =  21.00    NUMBER OF PIPES =   1
  PIPE-FLOW(CFS) =      11.12
  PIPE TRAVEL TIME(MIN.) =   0.06    Tc(MIN.) =    8.31
  LONGEST FLOWPATH FROM NODE      6.00 TO NODE      8.00 =     522.00 FEET.

****************************************************************************
  FLOW PROCESS FROM NODE      8.00 TO NODE      8.00 IS CODE =   1
----------------------------------------------------------------------------
  >>>>>DESIGNATE INDEPENDENT STREAM FOR CONFLUENCE<<<<<
============================================================================
  TOTAL NUMBER OF STREAMS =  2
  CONFLUENCE VALUES USED FOR INDEPENDENT STREAM  1 ARE:
```

```
  TIME OF CONCENTRATION(MIN.) =    8.31
  RAINFALL INTENSITY(INCH/HR) =   4.42
  AREA-AVERAGED Fm(INCH/HR) =  0.09
  AREA-AVERAGED Fp(INCH/HR) =  0.44
  AREA-AVERAGED Ap =  0.20
  EFFECTIVE STREAM AREA(ACRES) =       2.84
  TOTAL STREAM AREA(ACRES) =       2.84
  PEAK FLOW RATE(CFS) AT CONFLUENCE =      11.12

****************************************************************************
  FLOW PROCESS FROM NODE      9.00 TO NODE     10.00 IS CODE =  21
----------------------------------------------------------------------------
  >>>>>RATIONAL METHOD INITIAL SUBAREA ANALYSIS<<<<<
  >>USE TIME-OF-CONCENTRATION NOMOGRAPH FOR INITIAL SUBAREA<<
============================================================================
  INITIAL SUBAREA FLOW-LENGTH(FEET) =   444.00
  ELEVATION DATA: UPSTREAM(FEET) =   1603.50  DOWNSTREAM(FEET) =   1601.30

  Tc = K*[(LENGTH** 3.00)/(ELEVATION CHANGE)]**0.20
  SUBAREA ANALYSIS USED MINIMUM Tc(MIN.) =   10.727
  * 100 YEAR RAINFALL INTENSITY(INCH/HR) =  3.793
  SUBAREA Tc AND LOSS RATE DATA(AMC III):
   DEVELOPMENT TYPE/      SCS SOIL   AREA      Fp         Ap     SCS   Tc
       LAND USE            GROUP   (ACRES)  (INCH/HR)  (DECIMAL)  CN  (MIN.)
  RESIDENTIAL
  "11+ DWELLINGS/ACRE"       A        0.78      0.74     0.200    52   10.73
  RESIDENTIAL
  "11+ DWELLINGS/ACRE"       B        1.22      0.42     0.200    76   10.73
  SUBAREA AVERAGE PERVIOUS LOSS RATE, Fp(INCH/HR) =  0.55
  SUBAREA AVERAGE PERVIOUS AREA FRACTION, Ap =  0.200
  SUBAREA RUNOFF(CFS) =      6.63
  TOTAL AREA(ACRES) =      2.00   PEAK FLOW RATE(CFS) =      6.63

****************************************************************************
  FLOW PROCESS FROM NODE     10.00 TO NODE      8.00 IS CODE =  31
----------------------------------------------------------------------------
  >>>>>COMPUTE PIPE-FLOW TRAVEL TIME THRU SUBAREA<<<<<
  >>>>>USING COMPUTER-ESTIMATED PIPESIZE (NON-PRESSURE FLOW)<<<<<
============================================================================
  ELEVATION DATA: UPSTREAM(FEET) =  1597.80  DOWNSTREAM(FEET) =  1597.00
  FLOW LENGTH(FEET) =   165.00   MANNING'S N =  0.013
  DEPTH OF FLOW IN  18.0 INCH PIPE IS  14.5 INCHES
  PIPE-FLOW VELOCITY(FEET/SEC.) =   4.35
  ESTIMATED PIPE DIAMETER(INCH) =  18.00    NUMBER OF PIPES =   1
  PIPE-FLOW(CFS) =       6.63
  PIPE TRAVEL TIME(MIN.) =   0.63    Tc(MIN.) =   11.36
  LONGEST FLOWPATH FROM NODE      9.00 TO NODE      8.00 =     609.00 FEET.

****************************************************************************
  FLOW PROCESS FROM NODE      8.00 TO NODE      8.00 IS CODE =   1
----------------------------------------------------------------------------
  >>>>>DESIGNATE INDEPENDENT STREAM FOR CONFLUENCE<<<<<
  >>>>>AND COMPUTE VARIOUS CONFLUENCED STREAM VALUES<<<<<
============================================================================
  TOTAL NUMBER OF STREAMS =  2
  CONFLUENCE VALUES USED FOR INDEPENDENT STREAM  2 ARE:
  TIME OF CONCENTRATION(MIN.) =   11.36
  RAINFALL INTENSITY(INCH/HR) =   3.66
  AREA-AVERAGED Fm(INCH/HR) =  0.11
  AREA-AVERAGED Fp(INCH/HR) =  0.55
  AREA-AVERAGED Ap =  0.20
  EFFECTIVE STREAM AREA(ACRES) =       2.00
  TOTAL STREAM AREA(ACRES) =       2.00
```

```
  PEAK FLOW RATE(CFS) AT CONFLUENCE =       6.63

  ** CONFLUENCE DATA **
   STREAM       Q      Tc   Intensity   Fp(Fm)     Ap     Ae     HEADWATER
   NUMBER     (CFS)  (MIN.) (INCH/HR) (INCH/HR)         (ACRES)    NODE
      1       11.12    8.31    4.420  0.44( 0.09) 0.20       2.8       6.00
      2        6.63   11.36    3.664  0.55( 0.11) 0.20       2.0       9.00

  RAINFALL INTENSITY AND TIME OF CONCENTRATION RATIO
  CONFLUENCE FORMULA USED FOR  2 STREAMS.

  ** PEAK FLOW RATE TABLE **
   STREAM       Q      Tc   Intensity   Fp(Fm)     Ap     Ae     HEADWATER
   NUMBER     (CFS)  (MIN.) (INCH/HR) (INCH/HR)         (ACRES)    NODE
      1       17.00    8.31    4.420  0.48( 0.10) 0.20       4.3       6.00
      2       15.81   11.36    3.664  0.48( 0.10) 0.20       4.8       9.00

  COMPUTED CONFLUENCE ESTIMATES ARE AS FOLLOWS:
  PEAK FLOW RATE(CFS) =      17.00    Tc(MIN.) =     8.31
  EFFECTIVE AREA(ACRES) =       4.30   AREA-AVERAGED Fm(INCH/HR) =  0.10
  AREA-AVERAGED Fp(INCH/HR) =  0.48  AREA-AVERAGED Ap =  0.20
  TOTAL AREA(ACRES) =        4.8
  LONGEST FLOWPATH FROM NODE      9.00 TO NODE      8.00 =     609.00 FEET.

****************************************************************************
  FLOW PROCESS FROM NODE      8.00 TO NODE      3.00 IS CODE =  31
----------------------------------------------------------------------------
  >>>>>COMPUTE PIPE-FLOW TRAVEL TIME THRU SUBAREA<<<<<
  >>>>>USING COMPUTER-ESTIMATED PIPESIZE (NON-PRESSURE FLOW)<<<<<
============================================================================
  ELEVATION DATA: UPSTREAM(FEET) =  1597.00  DOWNSTREAM(FEET) =  1596.00
  FLOW LENGTH(FEET) =    37.00   MANNING'S N =  0.013
  DEPTH OF FLOW IN  21.0 INCH PIPE IS  13.0 INCHES
  PIPE-FLOW VELOCITY(FEET/SEC.) =  10.83
  ESTIMATED PIPE DIAMETER(INCH) =  21.00    NUMBER OF PIPES =   1
  PIPE-FLOW(CFS) =      17.00
  PIPE TRAVEL TIME(MIN.) =   0.06    Tc(MIN.) =    8.37
  LONGEST FLOWPATH FROM NODE      9.00 TO NODE      3.00 =     646.00 FEET.

****************************************************************************
  FLOW PROCESS FROM NODE      3.00 TO NODE      3.00 IS CODE =  11
----------------------------------------------------------------------------
  >>>>>CONFLUENCE MEMORY BANK # 1 WITH THE MAIN-STREAM MEMORY<<<<<
============================================================================

  ** MAIN STREAM CONFLUENCE DATA **
   STREAM       Q      Tc   Intensity   Fp(Fm)     Ap     Ae     HEADWATER
   NUMBER     (CFS)  (MIN.) (INCH/HR) (INCH/HR)         (ACRES)    NODE
      1       17.00    8.37    4.402  0.48( 0.10) 0.20       4.3       6.00
      2       15.81   11.42    3.653  0.48( 0.10) 0.20       4.8       9.00
  LONGEST FLOWPATH FROM NODE      9.00 TO NODE      3.00 =     646.00 FEET.

  ** MEMORY BANK #  1 CONFLUENCE DATA **
   STREAM       Q      Tc   Intensity   Fp(Fm)     Ap     Ae     HEADWATER
   NUMBER     (CFS)  (MIN.) (INCH/HR) (INCH/HR)         (ACRES)    NODE
      1       13.92    8.88    4.247  0.73( 0.15) 0.20       3.5       1.00
      2       13.25   10.76    3.786  0.73( 0.15) 0.20       3.8       4.00
  LONGEST FLOWPATH FROM NODE      1.00 TO NODE      3.00 =     679.00 FEET.

  ** PEAK FLOW RATE TABLE **
   STREAM       Q      Tc   Intensity   Fp(Fm)     Ap     Ae     HEADWATER
   NUMBER     (CFS)  (MIN.) (INCH/HR) (INCH/HR)         (ACRES)    NODE
      1       30.61    8.37    4.402  0.59( 0.12) 0.20       7.6       6.00
```

```
      2       30.73    8.88    4.247  0.59( 0.12) 0.20       7.9       1.00
      3       29.32   10.76    3.786  0.59( 0.12) 0.20       8.6       4.00
      4       28.57   11.42    3.653  0.59( 0.12) 0.20       8.7       9.00
    TOTAL AREA(ACRES) =         8.7

  COMPUTED CONFLUENCE ESTIMATES ARE AS FOLLOWS:
  PEAK FLOW RATE(CFS) =       30.73  Tc(MIN.) =    8.882
  EFFECTIVE AREA(ACRES) =      7.94  AREA-AVERAGED Fm(INCH/HR) =  0.12
  AREA-AVERAGED Fp(INCH/HR) =  0.59  AREA-AVERAGED Ap =  0.20
  TOTAL AREA(ACRES) =        8.7
  LONGEST FLOWPATH FROM NODE      1.00 TO NODE      3.00 =     679.00 FEET.

****************************************************************************
  FLOW PROCESS FROM NODE     11.00 TO NODE     12.00 IS CODE =  21
----------------------------------------------------------------------------
  >>>>>RATIONAL METHOD INITIAL SUBAREA ANALYSIS<<<<<
  >>USE TIME-OF-CONCENTRATION NOMOGRAPH FOR INITIAL SUBAREA<<
============================================================================
  INITIAL SUBAREA FLOW-LENGTH(FEET) =   205.00
  ELEVATION DATA: UPSTREAM(FEET) =   1601.30  DOWNSTREAM(FEET) =   1600.20

  Tc = K*[(LENGTH** 3.00)/(ELEVATION CHANGE)]**0.20
  SUBAREA ANALYSIS USED MINIMUM Tc(MIN.) =    7.750
  * 100 YEAR RAINFALL INTENSITY(INCH/HR) =  4.609
  SUBAREA Tc AND LOSS RATE DATA(AMC III):
   DEVELOPMENT TYPE/      SCS SOIL   AREA      Fp         Ap     SCS   Tc
       LAND USE            GROUP   (ACRES)  (INCH/HR)  (DECIMAL)  CN  (MIN.)
  RESIDENTIAL
  "11+ DWELLINGS/ACRE"       A        0.28      0.74     0.200    52    7.75
  SUBAREA AVERAGE PERVIOUS LOSS RATE, Fp(INCH/HR) =  0.74
  SUBAREA AVERAGE PERVIOUS AREA FRACTION, Ap =  0.200
  SUBAREA RUNOFF(CFS) =      1.12
  TOTAL AREA(ACRES) =      0.28   PEAK FLOW RATE(CFS) =      1.12
============================================================================
  END OF STUDY SUMMARY:
  TOTAL AREA(ACRES)     =        0.3  TC(MIN.) =      7.75
  EFFECTIVE AREA(ACRES) =      0.28  AREA-AVERAGED Fm(INCH/HR)=  0.15
  AREA-AVERAGED Fp(INCH/HR) =  0.74  AREA-AVERAGED Ap = 0.200
  PEAK FLOW RATE(CFS)   =       1.12
============================================================================
============================================================================
  END OF RATIONAL METHOD ANALYSIS
```

APPENDIX C: PROPOSED HYDROGRAPH METHOD & BASIN ROUTING, 2, 5, & 10 YEAR STORM FREQUENCY OUTPUT FILES FOR ON-SITE FACILITIES.

```
****************************************************************************
                      SMALL AREA UNIT HYDROGRAPH MODEL
============================================================================
         (C) Copyright 1989-2008 Advanced Engineering Software (aes)
             Ver. 15.0  Release Date: 04/01/2008  License ID 1420

                           Analysis prepared by:

                               CA Engineering
                        13821 Newport Ave., Ste 110
                             Tustin, Ca. 92780


****************************************************************************
----------------------------------------------------------------------------

 Problem Descriptions:

  2 YR BASIN ROUTING

----------------------------------------------------------------------------



    RATIONAL METHOD CALIBRATION COEFFICIENT = 0.90
    TOTAL CATCHMENT AREA(ACRES) =    8.98
    SOIL-LOSS RATE, Fm,(INCH/HR) =  0.230
    LOW LOSS FRACTION = 0.820
    TIME OF CONCENTRATION(MIN.) =  8.42
    SMALL AREA PEAK Q COMPUTED USING PEAK FLOW RATE FORMULA
    USER SPECIFIED RAINFALL VALUES ARE USED
    RETURN FREQUENCY(YEARS) =   2
       5-MINUTE POINT RAINFALL VALUE(INCHES) =  0.14
      30-MINUTE POINT RAINFALL VALUE(INCHES) =  0.35
       1-HOUR   POINT RAINFALL VALUE(INCHES) =  0.49
       3-HOUR   POINT RAINFALL VALUE(INCHES) =  0.84
       6-HOUR   POINT RAINFALL VALUE(INCHES) =  1.17
      24-HOUR   POINT RAINFALL VALUE(INCHES) =  2.14

----------------------------------------------------------------------------

    TOTAL CATCHMENT   RUNOFF  VOLUME(ACRE-FEET) =     0.38
    TOTAL CATCHMENT SOIL-LOSS VOLUME(ACRE-FEET) =     1.23

****************************************************************************
  TIME     VOLUME       Q    0.         2.5       5.0       7.5      10.0
 (HOURS)    (AF)      (CFS)
----------------------------------------------------------------------------
  0.00      0.0000      0.00  Q         .         .         .         .
  0.14      0.0003      0.06  Q         .         .         .         .
  0.28      0.0010      0.06  Q         .         .         .         .
  0.42      0.0016      0.06  Q         .         .         .         .
  0.56      0.0023      0.06  Q         .         .         .         .
  0.70      0.0030      0.06  Q         .         .         .         .
  0.84      0.0036      0.06  Q         .         .         .         .
```

```
0.98       0.0043      0.06  Q         .         .         .         .
1.12       0.0050      0.06  Q         .         .         .         .
1.26       0.0057      0.06  Q         .         .         .         .
1.41       0.0064      0.06  Q         .         .         .         .
1.55       0.0071      0.06  Q         .         .         .         .
1.69       0.0077      0.06  Q         .         .         .         .
1.83       0.0084      0.06  Q         .         .         .         .
1.97       0.0091      0.06  Q         .         .         .         .
2.11       0.0099      0.06  Q         .         .         .         .
2.25       0.0106      0.06  Q         .         .         .         .
2.39       0.0113      0.06  Q         .         .         .         .
2.53       0.0120      0.06  Q         .         .         .         .
2.67       0.0127      0.06  Q         .         .         .         .
2.81       0.0134      0.06  Q         .         .         .         .
2.95       0.0142      0.06  Q         .         .         .         .
3.09       0.0149      0.06  Q         .         .         .         .
3.23       0.0156      0.06  Q         .         .         .         .
3.37       0.0164      0.06  Q         .         .         .         .
3.51       0.0171      0.06  Q         .         .         .         .
3.65       0.0179      0.06  Q         .         .         .         .
3.79       0.0186      0.07  Q         .         .         .         .
3.93       0.0194      0.07  Q         .         .         .         .
4.07       0.0202      0.07  Q         .         .         .         .
4.21       0.0209      0.07  Q         .         .         .         .
4.35       0.0217      0.07  Q         .         .         .         .
4.49       0.0225      0.07  Q         .         .         .         .
4.63       0.0233      0.07  Q         .         .         .         .
4.77       0.0241      0.07  Q         .         .         .         .
4.91       0.0249      0.07  Q         .         .         .         .
5.05       0.0257      0.07  Q         .         .         .         .
5.19       0.0265      0.07  Q         .         .         .         .
5.33       0.0273      0.07  Q         .         .         .         .
5.47       0.0281      0.07  Q         .         .         .         .
5.62       0.0290      0.07  Q         .         .         .         .
5.76       0.0298      0.07  Q         .         .         .         .
5.90       0.0306      0.07  Q         .         .         .         .
6.04       0.0315      0.07  Q         .         .         .         .
6.18       0.0323      0.07  Q         .         .         .         .
6.32       0.0332      0.07  Q         .         .         .         .
6.46       0.0341      0.08  Q         .         .         .         .
6.60       0.0349      0.08  Q         .         .         .         .
6.74       0.0358      0.08  Q         .         .         .         .
6.88       0.0367      0.08  Q         .         .         .         .
7.02       0.0376      0.08  Q         .         .         .         .
7.16       0.0385      0.08  Q         .         .         .         .
7.30       0.0394      0.08  Q         .         .         .         .
7.44       0.0403      0.08  Q         .         .         .         .
7.58       0.0413      0.08  Q         .         .         .         .
7.72       0.0422      0.08  Q         .         .         .         .
7.86       0.0432      0.08  Q         .         .         .         .
8.00       0.0441      0.08  Q         .         .         .         .
8.14       0.0451      0.08  Q         .         .         .         .
8.28       0.0461      0.08  Q         .         .         .         .
8.42       0.0470      0.09  Q         .         .         .         .
8.56       0.0480      0.09  Q         .         .         .         .
8.70       0.0490      0.09  Q         .         .         .         .
8.84       0.0501      0.09  Q         .         .         .         .
8.98       0.0511      0.09  Q         .         .         .         .
9.12       0.0521      0.09  Q         .         .         .         .
9.26       0.0532      0.09  Q         .         .         .         .
9.40       0.0542      0.09  Q         .         .         .         .
9.54       0.0553      0.09  Q         .         .         .         .
9.68       0.0564      0.09  Q         .         .         .         .
```

```
 9.83      0.0575      0.10  Q         .         .         .         .
 9.97      0.0586      0.10  Q         .         .         .         .
10.11      0.0598      0.10  Q         .         .         .         .
10.25      0.0609      0.10  Q         .         .         .         .
10.39      0.0621      0.10  Q         .         .         .         .
10.53      0.0632      0.10  Q         .         .         .         .
10.67      0.0644      0.10  Q         .         .         .         .
10.81      0.0656      0.11  Q         .         .         .         .
10.95      0.0669      0.11  Q         .         .         .         .
11.09      0.0681      0.11  Q         .         .         .         .
11.23      0.0694      0.11  Q         .         .         .         .
11.37      0.0707      0.11  Q         .         .         .         .
11.51      0.0720      0.11  Q         .         .         .         .
11.65      0.0733      0.12  Q         .         .         .         .
11.79      0.0747      0.12  Q         .         .         .         .
11.93      0.0761      0.12  Q         .         .         .         .
12.07      0.0775      0.12  Q         .         .         .         .
12.21      0.0790      0.14  Q         .         .         .         .
12.35      0.0806      0.14  Q         .         .         .         .
12.49      0.0822      0.14  Q         .         .         .         .
12.63      0.0839      0.14  Q         .         .         .         .
12.77      0.0856      0.15  Q         .         .         .         .
12.91      0.0873      0.15  Q         .         .         .         .
13.05      0.0891      0.16  Q         .         .         .         .
13.19      0.0909      0.16  Q         .         .         .         .
13.33      0.0928      0.16  Q         .         .         .         .
13.47      0.0947      0.17  Q         .         .         .         .
13.61      0.0967      0.17  Q         .         .         .         .
13.75      0.0987      0.18  Q         .         .         .         .
13.90      0.1008      0.18  Q         .         .         .         .
14.04      0.1029      0.19  Q         .         .         .         .
14.18      0.1052      0.20  Q         .         .         .         .
14.32      0.1076      0.21  Q         .         .         .         .
14.46      0.1101      0.22  Q         .         .         .         .
14.60      0.1127      0.23  Q         .         .         .         .
14.74      0.1155      0.24  Q         .         .         .         .
14.88      0.1184      0.25  .Q        .         .         .         .
15.02      0.1214      0.27  .Q        .         .         .         .
15.16      0.1247      0.29  .Q        .         .         .         .
15.30      0.1282      0.32  .Q        .         .         .         .
15.44      0.1321      0.34  .Q        .         .         .         .
15.58      0.1364      0.40  .Q        .         .         .         .
15.72      0.1423      0.61  . Q       .         .         .         .
15.86      0.1554      1.65  .     Q   .         .         .         .
16.00      0.1803      2.65  .         Q         .         .         .
16.14      0.2450      8.50  .         .         .         .  Q      .
16.28      0.3003      1.05  .   Q     .         .         .         .
16.42      0.3085      0.37  .Q        .         .         .         .
16.56      0.3124      0.30  .Q        .         .         .         .
16.70      0.3157      0.26  .Q        .         .         .         .
16.84      0.3186      0.24  Q         .         .         .         .
16.98      0.3212      0.22  Q         .         .         .         .
17.12      0.3236      0.20  Q         .         .         .         .
17.26      0.3258      0.18  Q         .         .         .         .
17.40      0.3278      0.17  Q         .         .         .         .
17.54      0.3297      0.16  Q         .         .         .         .
17.68      0.3315      0.15  Q         .         .         .         .
17.82      0.3333      0.15  Q         .         .         .         .
17.96      0.3349      0.14  Q         .         .         .         .
18.11      0.3365      0.13  Q         .         .         .         .
18.25      0.3380      0.12  Q         .         .         .         .
18.39      0.3393      0.12  Q         .         .         .         .
18.53      0.3407      0.11  Q         .         .         .         .
```

```
  18.67      0.3419      0.11  Q         .         .         .         .
  18.81      0.3432      0.10  Q         .         .         .         .
  18.95      0.3443      0.10  Q         .         .         .         .
  19.09      0.3455      0.10  Q         .         .         .         .
  19.23      0.3466      0.10  Q         .         .         .         .
  19.37      0.3477      0.09  Q         .         .         .         .
  19.51      0.3488      0.09  Q         .         .         .         .
  19.65      0.3499      0.09  Q         .         .         .         .
  19.79      0.3509      0.09  Q         .         .         .         .
  19.93      0.3519      0.09  Q         .         .         .         .
  20.07      0.3529      0.08  Q         .         .         .         .
  20.21      0.3539      0.08  Q         .         .         .         .
  20.35      0.3548      0.08  Q         .         .         .         .
  20.49      0.3557      0.08  Q         .         .         .         .
  20.63      0.3566      0.08  Q         .         .         .         .
  20.77      0.3575      0.08  Q         .         .         .         .
  20.91      0.3584      0.08  Q         .         .         .         .
  21.05      0.3593      0.07  Q         .         .         .         .
  21.19      0.3601      0.07  Q         .         .         .         .
  21.33      0.3610      0.07  Q         .         .         .         .
  21.47      0.3618      0.07  Q         .         .         .         .
  21.61      0.3626      0.07  Q         .         .         .         .
  21.75      0.3634      0.07  Q         .         .         .         .
  21.89      0.3642      0.07  Q         .         .         .         .
  22.03      0.3650      0.07  Q         .         .         .         .
  22.17      0.3658      0.07  Q         .         .         .         .
  22.32      0.3665      0.07  Q         .         .         .         .
  22.46      0.3673      0.06  Q         .         .         .         .
  22.60      0.3680      0.06  Q         .         .         .         .
  22.74      0.3688      0.06  Q         .         .         .         .
  22.88      0.3695      0.06  Q         .         .         .         .
  23.02      0.3702      0.06  Q         .         .         .         .
  23.16      0.3709      0.06  Q         .         .         .         .
  23.30      0.3716      0.06  Q         .         .         .         .
  23.44      0.3723      0.06  Q         .         .         .         .
  23.58      0.3730      0.06  Q         .         .         .         .
  23.72      0.3737      0.06  Q         .         .         .         .
  23.86      0.3744      0.06  Q         .         .         .         .
  24.00      0.3750      0.06  Q         .         .         .         .
  24.14      0.3757      0.06  Q         .         .         .         .
  24.28      0.3760      0.00  Q         .         .         .         .
 ----------------------------------------------------------------------------

  Problem Descriptions:
```

```
============================================================================
     FLOW-THROUGH DETENTION BASIN MODEL

     SPECIFIED BASIN CONDITIONS ARE AS FOLLOWS:
     CONSTANT HYDROGRAPH TIME UNIT(MINUTES) =    8.420
     DEAD STORAGE(AF) =       0.00
     SPECIFIED DEAD STORAGE(AF) FILLED =       0.00
     ASSUMED INITIAL DEPTH(FEET) IN STORAGE BASIN =    0.00
```

```
                    INFLOW
                      |
                      |
                      |
                      V               __effective depth
                -------------         |   (and volume)
                |           |    |    |
                | detention |    |....V.............
                |   basin   |<-->|          outflow
                |           |    |........._________
                -------------    |         |   \
                      |          | storage |     basin outlet
                      V          -----------
                   OUTFLOW


     DEPTH-VS.-STORAGE AND DEPTH-VS.-DISCHARGE INFORMATION:
     TOTAL NUMBER OF BASIN DEPTH INFORMATION ENTRIES =  10
     *BASIN-DEPTH  STORAGE    OUTFLOW  **BASIN-DEPTH  STORAGE    OUTFLOW  *
     *   (FEET)  (ACRE-FEET)   (CFS)   **   (FEET)  (ACRE-FEET)   (CFS)   *
     *      0.000      0.000      0.000**      1.000      0.035      0.388*
     *      2.000      0.095      0.388**      3.000      0.166      0.388*
     *      4.000      0.242      0.388**      5.000      0.326      0.388*
     *      6.000      0.406      0.388**      7.000      0.478      0.388*
     *      8.000      0.535      0.388**      9.000      0.541      0.388*
----------------------------------------------------------------------------
     BASIN STORAGE, OUTFLOW AND DEPTH ROUTING VALUES:
      INTERVAL   DEPTH   {S-O*DT/2}   {S+O*DT/2}
       NUMBER   (FEET)   (ACRE-FEET)  (ACRE-FEET)
           1     0.00       0.00000      0.00000
           2     1.00       0.03270      0.03720
           3     2.00       0.09248      0.09698
           4     3.00       0.16374      0.16824
           5     4.00       0.24005      0.24455
           6     5.00       0.32341      0.32791
           7     6.00       0.40347      0.40797
           8     7.00       0.47607      0.48057
           9     8.00       0.53254      0.53704
          10     9.00       0.53921      0.54371
     WHERE S=STORAGE(AF);O=OUTFLOW(AF/MIN.);DT=UNIT INTERVAL(MIN.)
----------------------------------------------------------------------------
     DETENTION BASIN ROUTING RESULTS:
     NOTE: COMPUTED BASIN DEPTH, OUTFLOW, AND STORAGE QUANTITIES
           OCCUR AT THE GIVEN TIME. BASIN INFLOW VALUES REPRESENT THE
           AVERAGE INFLOW DURING THE RECENT HYDROGRAPH UNIT INTERVAL.

        TIME   DEAD-STORAGE  INFLOW  EFFECTIVE  OUTFLOW  EFFECTIVE
       (HRS)    FILLED(AF)    (CFS)  DEPTH(FT)   (CFS)   VOLUME(AF)
----------------------------------------------------------------------------
       0.002        0.000     0.00      0.00     0.00      0.000
       0.142        0.000     0.06      0.02     0.00      0.001
       0.283        0.000     0.06      0.03     0.01      0.001
       0.423        0.000     0.06      0.05     0.02      0.002
       0.563        0.000     0.06      0.06     0.02      0.002
       0.704        0.000     0.06      0.07     0.03      0.002
       0.844        0.000     0.06      0.08     0.03      0.003
       0.984        0.000     0.06      0.09     0.03      0.003
       1.125        0.000     0.06      0.10     0.04      0.003
       1.265        0.000     0.06      0.10     0.04      0.004
       1.405        0.000     0.06      0.11     0.04      0.004
       1.546        0.000     0.06      0.11     0.04      0.004
       1.686        0.000     0.06      0.12     0.05      0.004
```

1.826	0.000	0.06	0.12	0.05	0.004
1.967	0.000	0.06	0.13	0.05	0.004
2.107	0.000	0.06	0.13	0.05	0.005
2.247	0.000	0.06	0.13	0.05	0.005
2.388	0.000	0.06	0.14	0.05	0.005
2.528	0.000	0.06	0.14	0.05	0.005
2.668	0.000	0.06	0.14	0.05	0.005
2.809	0.000	0.06	0.14	0.06	0.005
2.949	0.000	0.06	0.15	0.06	0.005
3.089	0.000	0.06	0.15	0.06	0.005
3.230	0.000	0.06	0.15	0.06	0.005
3.370	0.000	0.06	0.15	0.06	0.005
3.510	0.000	0.06	0.15	0.06	0.005
3.651	0.000	0.06	0.16	0.06	0.005
3.791	0.000	0.07	0.16	0.06	0.006
3.931	0.000	0.07	0.16	0.06	0.006
4.072	0.000	0.07	0.16	0.06	0.006
4.212	0.000	0.07	0.16	0.06	0.006
4.352	0.000	0.07	0.16	0.06	0.006
4.493	0.000	0.07	0.16	0.06	0.006
4.633	0.000	0.07	0.17	0.06	0.006
4.773	0.000	0.07	0.17	0.06	0.006
4.914	0.000	0.07	0.17	0.07	0.006
5.054	0.000	0.07	0.17	0.07	0.006
5.194	0.000	0.07	0.17	0.07	0.006
5.335	0.000	0.07	0.17	0.07	0.006
5.475	0.000	0.07	0.17	0.07	0.006
5.615	0.000	0.07	0.18	0.07	0.006
5.756	0.000	0.07	0.18	0.07	0.006
5.896	0.000	0.07	0.18	0.07	0.006
6.036	0.000	0.07	0.18	0.07	0.006
6.177	0.000	0.07	0.18	0.07	0.006
6.317	0.000	0.07	0.18	0.07	0.006
6.457	0.000	0.08	0.18	0.07	0.006
6.598	0.000	0.08	0.18	0.07	0.006
6.738	0.000	0.08	0.19	0.07	0.007
6.878	0.000	0.08	0.19	0.07	0.007
7.019	0.000	0.08	0.19	0.07	0.007
7.159	0.000	0.08	0.19	0.07	0.007
7.299	0.000	0.08	0.19	0.07	0.007
7.440	0.000	0.08	0.19	0.07	0.007
7.580	0.000	0.08	0.20	0.08	0.007
7.720	0.000	0.08	0.20	0.08	0.007
7.861	0.000	0.08	0.20	0.08	0.007
8.001	0.000	0.08	0.20	0.08	0.007
8.141	0.000	0.08	0.20	0.08	0.007
8.282	0.000	0.08	0.20	0.08	0.007
8.422	0.000	0.09	0.21	0.08	0.007
8.562	0.000	0.09	0.21	0.08	0.007
8.703	0.000	0.09	0.21	0.08	0.007
8.843	0.000	0.09	0.21	0.08	0.007
8.983	0.000	0.09	0.21	0.08	0.007
9.124	0.000	0.09	0.22	0.08	0.008
9.264	0.000	0.09	0.22	0.08	0.008
9.404	0.000	0.09	0.22	0.09	0.008
9.545	0.000	0.09	0.22	0.09	0.008
9.685	0.000	0.09	0.23	0.09	0.008
9.825	0.000	0.10	0.23	0.09	0.008
9.966	0.000	0.10	0.23	0.09	0.008
10.106	0.000	0.10	0.23	0.09	0.008
10.246	0.000	0.10	0.24	0.09	0.008
10.387	0.000	0.10	0.24	0.09	0.008
10.527	0.000	0.10	0.24	0.09	0.008

10.667	0.000	0.10	0.25	0.09	0.009
10.808	0.000	0.11	0.25	0.10	0.009
10.948	0.000	0.11	0.25	0.10	0.009
11.088	0.000	0.11	0.26	0.10	0.009
11.229	0.000	0.11	0.26	0.10	0.009
11.369	0.000	0.11	0.26	0.10	0.009
11.509	0.000	0.11	0.27	0.10	0.009
11.650	0.000	0.12	0.27	0.10	0.009
11.790	0.000	0.12	0.27	0.11	0.010
11.930	0.000	0.12	0.28	0.11	0.010
12.071	0.000	0.12	0.28	0.11	0.010
12.211	0.000	0.14	0.29	0.11	0.010
12.351	0.000	0.14	0.30	0.11	0.010
12.492	0.000	0.14	0.31	0.12	0.011
12.632	0.000	0.14	0.32	0.12	0.011
12.772	0.000	0.15	0.32	0.12	0.011
12.913	0.000	0.15	0.33	0.13	0.012
13.053	0.000	0.16	0.34	0.13	0.012
13.193	0.000	0.16	0.35	0.13	0.012
13.334	0.000	0.16	0.36	0.14	0.012
13.474	0.000	0.17	0.37	0.14	0.013
13.614	0.000	0.17	0.38	0.14	0.013
13.755	0.000	0.18	0.39	0.15	0.013
13.895	0.000	0.18	0.40	0.15	0.014
14.035	0.000	0.19	0.41	0.16	0.014
14.176	0.000	0.20	0.42	0.16	0.015
14.316	0.000	0.21	0.44	0.17	0.015
14.456	0.000	0.22	0.45	0.17	0.016
14.597	0.000	0.23	0.47	0.18	0.016
14.737	0.000	0.24	0.49	0.19	0.017
14.877	0.000	0.25	0.51	0.19	0.018
15.018	0.000	0.27	0.53	0.20	0.019
15.158	0.000	0.29	0.56	0.21	0.019
15.298	0.000	0.32	0.59	0.22	0.021
15.439	0.000	0.34	0.63	0.24	0.022
15.579	0.000	0.40	0.68	0.25	0.024
15.719	0.000	0.61	0.78	0.28	0.027
15.860	0.000	1.65	1.13	0.35	0.042
16.000	0.000	2.65	1.57	0.39	0.069
16.140	0.000	8.50	2.96	0.39	0.163
16.281	0.000	1.05	**3.06**	**0.39**	0.170
16.421	0.000	0.37	3.06	0.39	0.170
16.561	0.000	0.30	3.04	0.39	0.169
16.702	0.000	0.26	3.02	0.39	0.168
16.842	0.000	0.24	3.00	0.39	0.166
16.982	0.000	0.22	2.97	0.39	0.164
17.123	0.000	0.20	2.94	0.39	0.162
17.263	0.000	0.18	2.91	0.39	0.159
17.403	0.000	0.17	2.87	0.39	0.157
17.544	0.000	0.16	2.84	0.39	0.154
17.684	0.000	0.15	2.80	0.39	0.152
17.824	0.000	0.15	2.76	0.39	0.149
17.965	0.000	0.14	2.72	0.39	0.146
18.105	0.000	0.13	2.68	0.39	0.143
18.245	0.000	0.12	2.63	0.39	0.140
18.386	0.000	0.12	2.59	0.39	0.137
18.526	0.000	0.11	2.54	0.39	0.133
18.666	0.000	0.11	2.50	0.39	0.130
18.807	0.000	0.10	2.45	0.39	0.127
18.947	0.000	0.10	2.40	0.39	0.124
19.087	0.000	0.10	2.36	0.39	0.120
19.228	0.000	0.10	2.31	0.39	0.117
19.368	0.000	0.09	2.26	0.39	0.113

```
      19.508        0.000     0.09      2.21     0.39      0.110
      19.649        0.000     0.09      2.16     0.39      0.106
      19.789        0.000     0.09      2.12     0.39      0.103
      19.929        0.000     0.09      2.07     0.39      0.099
      20.070        0.000     0.08      2.02     0.39      0.096
      20.210        0.000     0.08      1.96     0.39      0.092
      20.350        0.000     0.08      1.90     0.39      0.089
      20.491        0.000     0.08      1.84     0.39      0.085
      20.631        0.000     0.08      1.78     0.39      0.082
      20.771        0.000     0.08      1.72     0.39      0.078
      20.912        0.000     0.08      1.66     0.39      0.074
      21.052        0.000     0.07      1.60     0.39      0.071
      21.192        0.000     0.07      1.54     0.39      0.067
      21.333        0.000     0.07      1.48     0.39      0.063
      21.473        0.000     0.07      1.42     0.39      0.060
      21.613        0.000     0.07      1.35     0.39      0.056
      21.754        0.000     0.07      1.29     0.39      0.052
      21.894        0.000     0.07      1.23     0.39      0.049
      22.034        0.000     0.07      1.17     0.39      0.045
      22.175        0.000     0.07      1.11     0.39      0.041
      22.315        0.000     0.07      1.04     0.39      0.038
      22.455        0.000     0.06      0.97     0.38      0.034
      22.596        0.000     0.06      0.87     0.36      0.030
      22.736        0.000     0.06      0.78     0.32      0.027
      22.876        0.000     0.06      0.71     0.29      0.025
      23.017        0.000     0.06      0.64     0.26      0.022
      23.157        0.000     0.06      0.58     0.24      0.020
      23.297        0.000     0.06      0.53     0.22      0.019
      23.438        0.000     0.06      0.49     0.20      0.017
      23.578        0.000     0.06      0.45     0.18      0.016
      23.718        0.000     0.06      0.41     0.17      0.014
      23.859        0.000     0.06      0.38     0.15      0.013
      23.999        0.000     0.06      0.35     0.14      0.012
      24.139        0.000     0.06      0.33     0.13      0.011
      24.280        0.000     0.00      0.29     0.12      0.010
----------------------------------------------------------------------------
```

```
****************************************************************************
                      SMALL AREA UNIT HYDROGRAPH MODEL
============================================================================
         (C) Copyright 1989-2008 Advanced Engineering Software (aes)
             Ver. 15.0  Release Date: 04/01/2008  License ID 1420

                           Analysis prepared by:

                               CA Engineering
                        13821 Newport Ave., Ste 110
                             Tustin, Ca. 92780


****************************************************************************
----------------------------------------------------------------------------

 Problem Descriptions:

  5 YR BASIN ROUTING

----------------------------------------------------------------------------


    RATIONAL METHOD CALIBRATION COEFFICIENT = 1.05
    TOTAL CATCHMENT AREA(ACRES) =    8.98
    SOIL-LOSS RATE, Fm,(INCH/HR) =  0.200
    LOW LOSS FRACTION = 0.740
    TIME OF CONCENTRATION(MIN.) =  9.08
    SMALL AREA PEAK Q COMPUTED USING PEAK FLOW RATE FORMULA
    USER SPECIFIED RAINFALL VALUES ARE USED
    RETURN FREQUENCY(YEARS) =   5
       5-MINUTE POINT RAINFALL VALUE(INCHES) =  0.18
      30-MINUTE POINT RAINFALL VALUE(INCHES) =  0.47
       1-HOUR   POINT RAINFALL VALUE(INCHES) =  0.65
       3-HOUR   POINT RAINFALL VALUE(INCHES) =  1.10
       6-HOUR   POINT RAINFALL VALUE(INCHES) =  1.51
      24-HOUR   POINT RAINFALL VALUE(INCHES) =  2.77

----------------------------------------------------------------------------

    TOTAL CATCHMENT   RUNOFF  VOLUME(ACRE-FEET) =     0.79
    TOTAL CATCHMENT SOIL-LOSS VOLUME(ACRE-FEET) =     1.29

****************************************************************************
  TIME     VOLUME       Q    0.        5.0      10.0      15.0      20.0
 (HOURS)    (AF)      (CFS)
----------------------------------------------------------------------------
  0.11      0.0006      0.12  Q         .         .         .         .
  0.26      0.0021      0.12  Q         .         .         .         .
  0.41      0.0037      0.13  Q         .         .         .         .
  0.56      0.0052      0.13  Q         .         .         .         .
  0.72      0.0068      0.13  Q         .         .         .         .
  0.87      0.0084      0.13  Q         .         .         .         .
  1.02      0.0100      0.13  Q         .         .         .         .
  1.17      0.0116      0.13  Q         .         .         .         .
  1.32      0.0132      0.13  Q         .         .         .         .
  1.47      0.0148      0.13  Q         .         .         .         .
  1.62      0.0165      0.13  Q         .         .         .         .
  1.77      0.0181      0.13  Q         .         .         .         .
  1.93      0.0198      0.13  Q         .         .         .         .
  2.08      0.0214      0.13  Q         .         .         .         .
  2.23      0.0231      0.13  Q         .         .         .         .
```

```
 2.38      0.0248      0.13  Q         .         .         .         .
 2.53      0.0265      0.14  Q         .         .         .         .
 2.68      0.0282      0.14  Q         .         .         .         .
 2.83      0.0299      0.14  Q         .         .         .         .
 2.99      0.0316      0.14  Q         .         .         .         .
 3.14      0.0334      0.14  Q         .         .         .         .
 3.29      0.0351      0.14  Q         .         .         .         .
 3.44      0.0369      0.14  Q         .         .         .         .
 3.59      0.0386      0.14  Q         .         .         .         .
 3.74      0.0404      0.14  Q         .         .         .         .
 3.89      0.0422      0.14  Q         .         .         .         .
 4.04      0.0440      0.15  Q         .         .         .         .
 4.20      0.0458      0.15  Q         .         .         .         .
 4.35      0.0477      0.15  Q         .         .         .         .
 4.50      0.0495      0.15  Q         .         .         .         .
 4.65      0.0514      0.15  Q         .         .         .         .
 4.80      0.0532      0.15  Q         .         .         .         .
 4.95      0.0551      0.15  Q         .         .         .         .
 5.10      0.0570      0.15  Q         .         .         .         .
 5.26      0.0590      0.15  Q         .         .         .         .
 5.41      0.0609      0.15  Q         .         .         .         .
 5.56      0.0628      0.16  Q         .         .         .         .
 5.71      0.0648      0.16  Q         .         .         .         .
 5.86      0.0668      0.16  Q         .         .         .         .
 6.01      0.0688      0.16  Q         .         .         .         .
 6.16      0.0708      0.16  Q         .         .         .         .
 6.31      0.0728      0.16  Q         .         .         .         .
 6.47      0.0749      0.16  Q         .         .         .         .
 6.62      0.0769      0.17  Q         .         .         .         .
 6.77      0.0790      0.17  Q         .         .         .         .
 6.92      0.0811      0.17  Q         .         .         .         .
 7.07      0.0832      0.17  Q         .         .         .         .
 7.22      0.0854      0.17  Q         .         .         .         .
 7.37      0.0876      0.17  Q         .         .         .         .
 7.53      0.0897      0.18  Q         .         .         .         .
 7.68      0.0919      0.18  Q         .         .         .         .
 7.83      0.0942      0.18  Q         .         .         .         .
 7.98      0.0964      0.18  Q         .         .         .         .
 8.13      0.0987      0.18  Q         .         .         .         .
 8.28      0.1010      0.19  Q         .         .         .         .
 8.43      0.1033      0.19  Q         .         .         .         .
 8.58      0.1057      0.19  Q         .         .         .         .
 8.74      0.1081      0.19  Q         .         .         .         .
 8.89      0.1105      0.19  Q         .         .         .         .
 9.04      0.1129      0.20  Q         .         .         .         .
 9.19      0.1154      0.20  Q         .         .         .         .
 9.34      0.1179      0.20  Q         .         .         .         .
 9.49      0.1204      0.20  Q         .         .         .         .
 9.64      0.1229      0.21  Q         .         .         .         .
 9.80      0.1255      0.21  Q         .         .         .         .
 9.95      0.1282      0.21  Q         .         .         .         .
10.10      0.1308      0.21  Q         .         .         .         .
10.25      0.1335      0.22  Q         .         .         .         .
10.40      0.1363      0.22  Q         .         .         .         .
10.55      0.1390      0.22  Q         .         .         .         .
10.70      0.1419      0.23  Q         .         .         .         .
10.85      0.1447      0.23  Q         .         .         .         .
11.01      0.1477      0.24  Q         .         .         .         .
11.16      0.1506      0.24  Q         .         .         .         .
11.31      0.1536      0.24  Q         .         .         .         .
11.46      0.1567      0.25  Q         .         .         .         .
11.61      0.1598      0.25  Q         .         .         .         .
11.76      0.1630      0.26  Q         .         .         .         .
```

```
11.91      0.1663      0.26  Q         .         .         .         .
12.07      0.1696      0.27  Q         .         .         .         .
12.22      0.1730      0.29  Q         .         .         .         .
12.37      0.1766      0.29  Q         .         .         .         .
12.52      0.1803      0.30  Q         .         .         .         .
12.67      0.1841      0.30  Q         .         .         .         .
12.82      0.1880      0.31  Q         .         .         .         .
12.97      0.1919      0.32  Q         .         .         .         .
13.12      0.1960      0.33  Q         .         .         .         .
13.28      0.2002      0.34  Q         .         .         .         .
13.43      0.2045      0.35  Q         .         .         .         .
13.58      0.2089      0.36  Q         .         .         .         .
13.73      0.2135      0.37  Q         .         .         .         .
13.88      0.2183      0.38  Q         .         .         .         .
14.03      0.2232      0.40  Q         .         .         .         .
14.18      0.2284      0.43  Q         .         .         .         .
14.34      0.2339      0.45  Q         .         .         .         .
14.49      0.2396      0.47  Q         .         .         .         .
14.64      0.2457      0.50  .Q        .         .         .         .
14.79      0.2520      0.52  .Q        .         .         .         .
14.94      0.2588      0.57  .Q        .         .         .         .
15.09      0.2661      0.59  .Q        .         .         .         .
15.24      0.2740      0.67  .Q        .         .         .         .
15.39      0.2834      0.84  .Q        .         .         .         .
15.55      0.2978      1.47  . Q       .         .         .         .
15.70      0.3184      1.83  .  Q      .         .         .         .
15.85      0.3508      3.36  .     Q   .         .         .         .
16.00      0.4023      4.87  .        Q.         .         .         .
16.15      0.5182     13.67  .         .         .      Q  .         .
16.30      0.6187      2.40  .   Q     .         .         .         .
16.45      0.6409      1.14  . Q       .         .         .         .
16.61      0.6520      0.63  .Q        .         .         .         .
16.76      0.6593      0.54  .Q        .         .         .         .
16.91      0.6657      0.48  Q         .         .         .         .
17.06      0.6714      0.44  Q         .         .         .         .
17.21      0.6766      0.39  Q         .         .         .         .
17.36      0.6814      0.37  Q         .         .         .         .
17.51      0.6858      0.34  Q         .         .         .         .
17.66      0.6900      0.33  Q         .         .         .         .
17.82      0.6940      0.31  Q         .         .         .         .
17.97      0.6978      0.29  Q         .         .         .         .
18.12      0.7013      0.28  Q         .         .         .         .
18.27      0.7047      0.26  Q         .         .         .         .
18.42      0.7079      0.25  Q         .         .         .         .
18.57      0.7110      0.24  Q         .         .         .         .
18.72      0.7139      0.23  Q         .         .         .         .
18.88      0.7168      0.23  Q         .         .         .         .
19.03      0.7196      0.22  Q         .         .         .         .
19.18      0.7223      0.21  Q         .         .         .         .
19.33      0.7249      0.21  Q         .         .         .         .
19.48      0.7275      0.20  Q         .         .         .         .
19.63      0.7300      0.20  Q         .         .         .         .
19.78      0.7324      0.19  Q         .         .         .         .
19.93      0.7348      0.19  Q         .         .         .         .
20.09      0.7371      0.18  Q         .         .         .         .
20.24      0.7394      0.18  Q         .         .         .         .
20.39      0.7416      0.18  Q         .         .         .         .
20.54      0.7438      0.17  Q         .         .         .         .
20.69      0.7459      0.17  Q         .         .         .         .
20.84      0.7480      0.17  Q         .         .         .         .
20.99      0.7501      0.16  Q         .         .         .         .
21.15      0.7521      0.16  Q         .         .         .         .
21.30      0.7541      0.16  Q         .         .         .         .
```

```
  21.45      0.7561      0.16  Q         .         .         .         .
  21.60      0.7580      0.15  Q         .         .         .         .
  21.75      0.7599      0.15  Q         .         .         .         .
  21.90      0.7618      0.15  Q         .         .         .         .
  22.05      0.7637      0.15  Q         .         .         .         .
  22.20      0.7655      0.14  Q         .         .         .         .
  22.36      0.7673      0.14  Q         .         .         .         .
  22.51      0.7690      0.14  Q         .         .         .         .
  22.66      0.7708      0.14  Q         .         .         .         .
  22.81      0.7725      0.14  Q         .         .         .         .
  22.96      0.7742      0.14  Q         .         .         .         .
  23.11      0.7759      0.13  Q         .         .         .         .
  23.26      0.7776      0.13  Q         .         .         .         .
  23.42      0.7792      0.13  Q         .         .         .         .
  23.57      0.7808      0.13  Q         .         .         .         .
  23.72      0.7824      0.13  Q         .         .         .         .
  23.87      0.7840      0.13  Q         .         .         .         .
  24.02      0.7856      0.12  Q         .         .         .         .
  24.17      0.7864      0.00  Q         .         .         .         .
 ----------------------------------------------------------------------------

  Problem Descriptions:
```

```
============================================================================
     FLOW-THROUGH DETENTION BASIN MODEL

     SPECIFIED BASIN CONDITIONS ARE AS FOLLOWS:
     CONSTANT HYDROGRAPH TIME UNIT(MINUTES) =    9.080
     DEAD STORAGE(AF) =       0.00
     SPECIFIED DEAD STORAGE(AF) FILLED =       0.00
     ASSUMED INITIAL DEPTH(FEET) IN STORAGE BASIN =    0.00


                    INFLOW
                      |
                      |
                      |
                      V               __effective depth
                -------------         |   (and volume)
                |           |    |    |
                | detention |    |....V.............
                |   basin   |<-->|         outflow
                |           |    |........._________
                -------------    |         |   \
                      |          | storage |     basin outlet
                      V          -----------
                   OUTFLOW


     DEPTH-VS.-STORAGE AND DEPTH-VS.-DISCHARGE INFORMATION:
     TOTAL NUMBER OF BASIN DEPTH INFORMATION ENTRIES =  10
     *BASIN-DEPTH  STORAGE    OUTFLOW  **BASIN-DEPTH  STORAGE    OUTFLOW  *
     *   (FEET)  (ACRE-FEET)   (CFS)   **   (FEET)  (ACRE-FEET)   (CFS)   *
     *      0.000      0.000      0.000**      1.000      0.035      0.388*
     *      2.000      0.095      0.388**      3.000      0.166      0.388*
     *      4.000      0.242      0.388**      5.000      0.326      0.388*
     *      6.000      0.406      0.388**      7.000      0.478      0.388*
     *      8.000      0.535      0.388**      9.000      0.541      0.388*
```

```
----------------------------------------------------------------------------
     BASIN STORAGE, OUTFLOW AND DEPTH ROUTING VALUES:
      INTERVAL   DEPTH   {S-O*DT/2}   {S+O*DT/2}
       NUMBER   (FEET)   (ACRE-FEET)  (ACRE-FEET)
           1     0.00       0.00000      0.00000
           2     1.00       0.03252      0.03738
           3     2.00       0.09230      0.09716
           4     3.00       0.16356      0.16842
           5     4.00       0.23987      0.24473
           6     5.00       0.32323      0.32809
           7     6.00       0.40329      0.40815
           8     7.00       0.47589      0.48075
           9     8.00       0.53236      0.53722
          10     9.00       0.53903      0.54389
     WHERE S=STORAGE(AF);O=OUTFLOW(AF/MIN.);DT=UNIT INTERVAL(MIN.)
----------------------------------------------------------------------------
     DETENTION BASIN ROUTING RESULTS:
     NOTE: COMPUTED BASIN DEPTH, OUTFLOW, AND STORAGE QUANTITIES
           OCCUR AT THE GIVEN TIME. BASIN INFLOW VALUES REPRESENT THE
           AVERAGE INFLOW DURING THE RECENT HYDROGRAPH UNIT INTERVAL.

        TIME  DEAD-STORAGE  INFLOW  EFFECTIVE  OUTFLOW  EFFECTIVE
       (HRS)   FILLED(AF)    (CFS)  DEPTH(FT)   (CFS)   VOLUME(AF)
----------------------------------------------------------------------------
       0.110        0.000     0.12      0.04     0.01      0.001
       0.261        0.000     0.12      0.08     0.02      0.003
       0.413        0.000     0.13      0.11     0.04      0.004
       0.564        0.000     0.13      0.14     0.05      0.005
       0.715        0.000     0.13      0.16     0.06      0.006
       0.867        0.000     0.13      0.18     0.07      0.006
       1.018        0.000     0.13      0.20     0.07      0.007
       1.169        0.000     0.13      0.22     0.08      0.008
       1.321        0.000     0.13      0.23     0.09      0.008
       1.472        0.000     0.13      0.25     0.09      0.009
       1.623        0.000     0.13      0.26     0.10      0.009
       1.775        0.000     0.13      0.27     0.10      0.009
       1.926        0.000     0.13      0.28     0.11      0.010
       2.077        0.000     0.13      0.29     0.11      0.010
       2.229        0.000     0.13      0.29     0.11      0.010
       2.380        0.000     0.13      0.30     0.12      0.011
       2.531        0.000     0.14      0.31     0.12      0.011
       2.683        0.000     0.14      0.31     0.12      0.011
       2.834        0.000     0.14      0.32     0.12      0.011
       2.985        0.000     0.14      0.32     0.12      0.011
       3.137        0.000     0.14      0.33     0.13      0.011
       3.288        0.000     0.14      0.33     0.13      0.012
       3.439        0.000     0.14      0.34     0.13      0.012
       3.591        0.000     0.14      0.34     0.13      0.012
       3.742        0.000     0.14      0.34     0.13      0.012
       3.893        0.000     0.14      0.35     0.13      0.012
       4.045        0.000     0.15      0.35     0.14      0.012
       4.196        0.000     0.15      0.35     0.14      0.012
       4.347        0.000     0.15      0.36     0.14      0.012
       4.499        0.000     0.15      0.36     0.14      0.013
       4.650        0.000     0.15      0.36     0.14      0.013
       4.801        0.000     0.15      0.37     0.14      0.013
       4.953        0.000     0.15      0.37     0.14      0.013
       5.104        0.000     0.15      0.37     0.14      0.013
       5.255        0.000     0.15      0.38     0.15      0.013
       5.407        0.000     0.15      0.38     0.15      0.013
       5.558        0.000     0.16      0.38     0.15      0.013
       5.709        0.000     0.16      0.39     0.15      0.013
       5.861        0.000     0.16      0.39     0.15      0.014
```

6.012	0.000	0.16	0.39	0.15	0.014
6.163	0.000	0.16	0.40	0.15	0.014
6.315	0.000	0.16	0.40	0.15	0.014
6.466	0.000	0.16	0.40	0.16	0.014
6.617	0.000	0.17	0.40	0.16	0.014
6.769	0.000	0.17	0.41	0.16	0.014
6.920	0.000	0.17	0.41	0.16	0.014
7.071	0.000	0.17	0.42	0.16	0.015
7.223	0.000	0.17	0.42	0.16	0.015
7.374	0.000	0.17	0.42	0.16	0.015
7.525	0.000	0.18	0.43	0.16	0.015
7.677	0.000	0.18	0.43	0.17	0.015
7.828	0.000	0.18	0.43	0.17	0.015
7.979	0.000	0.18	0.44	0.17	0.015
8.131	0.000	0.18	0.44	0.17	0.015
8.282	0.000	0.19	0.45	0.17	0.016
8.433	0.000	0.19	0.45	0.17	0.016
8.585	0.000	0.19	0.46	0.18	0.016
8.736	0.000	0.19	0.46	0.18	0.016
8.887	0.000	0.19	0.47	0.18	0.016
9.039	0.000	0.20	0.47	0.18	0.016
9.190	0.000	0.20	0.48	0.18	0.017
9.341	0.000	0.20	0.48	0.19	0.017
9.493	0.000	0.20	0.49	0.19	0.017
9.644	0.000	0.21	0.49	0.19	0.017
9.795	0.000	0.21	0.50	0.19	0.017
9.947	0.000	0.21	0.50	0.19	0.018
10.098	0.000	0.21	0.51	0.20	0.018
10.249	0.000	0.22	0.52	0.20	0.018
10.401	0.000	0.22	0.52	0.20	0.018
10.552	0.000	0.22	0.53	0.20	0.019
10.703	0.000	0.23	0.54	0.21	0.019
10.855	0.000	0.23	0.55	0.21	0.019
11.006	0.000	0.24	0.55	0.21	0.019
11.157	0.000	0.24	0.56	0.22	0.020
11.309	0.000	0.24	0.57	0.22	0.020
11.460	0.000	0.25	0.58	0.22	0.020
11.611	0.000	0.25	0.59	0.23	0.021
11.763	0.000	0.26	0.60	0.23	0.021
11.914	0.000	0.26	0.61	0.23	0.021
12.065	0.000	0.27	0.62	0.24	0.022
12.217	0.000	0.29	0.63	0.24	0.022
12.368	0.000	0.29	0.65	0.25	0.023
12.519	0.000	0.30	0.66	0.25	0.023
12.671	0.000	0.30	0.68	0.26	0.024
12.822	0.000	0.31	0.70	0.27	0.024
12.973	0.000	0.32	0.71	0.27	0.025
13.125	0.000	0.33	0.73	0.28	0.026
13.276	0.000	0.34	0.75	0.29	0.026
13.427	0.000	0.35	0.77	0.29	0.027
13.579	0.000	0.36	0.79	0.30	0.028
13.730	0.000	0.37	0.81	0.31	0.028
13.881	0.000	0.38	0.84	0.32	0.029
14.033	0.000	0.40	0.86	0.33	0.030
14.184	0.000	0.43	0.89	0.34	0.031
14.335	0.000	0.45	0.93	0.35	0.032
14.487	0.000	0.47	0.96	0.37	0.034
14.638	0.000	0.50	1.00	0.38	0.035
14.789	0.000	0.52	1.03	0.39	0.037
14.941	0.000	0.57	1.07	0.39	0.039
15.092	0.000	0.59	1.11	0.39	0.042
15.243	0.000	0.67	1.17	0.39	0.045
15.395	0.000	0.84	1.26	0.39	0.051

```
     15.546          0.000      1.47      1.49      0.39      0.064
     15.697          0.000      1.83      1.79      0.39      0.082
     15.849          0.000      3.36      2.35      0.39      0.119
     16.000          0.000      4.87      3.12      0.39      0.175
     16.151          0.000     13.67      5.20      0.39      0.342
     16.303          0.000      2.40      5.51      0.39      0.367
     16.454          0.000      1.14      5.63      0.39      0.376
     16.605          0.000      0.63      5.67      0.39      0.379
     16.757          0.000      0.54      5.69      0.39      0.381
     16.908          0.000      0.48      5.71      0.39      0.382
     17.059          0.000      0.44      5.72      0.39      0.383
     17.211          0.000      0.39      5.72      0.39      0.383
     17.362          0.000      0.37      5.71      0.39      0.383
     17.513          0.000      0.34      5.71      0.39      0.382
     17.665          0.000      0.33      5.70      0.39      0.381
     17.816          0.000      0.31      5.68      0.39      0.380
     17.967          0.000      0.29      5.67      0.39      0.379
     18.119          0.000      0.28      5.65      0.39      0.378
     18.270          0.000      0.26      5.63      0.39      0.376
     18.421          0.000      0.25      5.61      0.39      0.375
     18.573          0.000      0.24      5.59      0.39      0.373
     18.724          0.000      0.23      5.56      0.39      0.371
     18.875          0.000      0.23      5.54      0.39      0.369
     19.027          0.000      0.22      5.51      0.39      0.367
     19.178          0.000      0.21      5.48      0.39      0.364
     19.329          0.000      0.21      5.46      0.39      0.362
     19.481          0.000      0.20      5.43      0.39      0.360
     19.632          0.000      0.20      5.40      0.39      0.357
     19.783          0.000      0.19      5.37      0.39      0.355
     19.935          0.000      0.19      5.34      0.39      0.353
     20.086          0.000      0.18      5.30      0.39      0.350
     20.237          0.000      0.18      5.27      0.39      0.347
     20.389          0.000      0.18      5.24      0.39      0.345
     20.540          0.000      0.17      5.20      0.39      0.342
     20.691          0.000      0.17      5.17      0.39      0.339
     20.843          0.000      0.17      5.14      0.39      0.337
     20.994          0.000      0.16      5.10      0.39      0.334
     21.145          0.000      0.16      5.07      0.39      0.331
     21.297          0.000      0.16      5.03      0.39      0.328
     21.448          0.000      0.16      4.99      0.39      0.325
     21.599          0.000      0.15      4.96      0.39      0.322
     21.751          0.000      0.15      4.92      0.39      0.319
     21.902          0.000      0.15      4.89      0.39      0.316
     22.053          0.000      0.15      4.85      0.39      0.313
     22.205          0.000      0.14      4.81      0.39      0.310
     22.356          0.000      0.14      4.78      0.39      0.307
     22.507          0.000      0.14      4.74      0.39      0.304
     22.659          0.000      0.14      4.70      0.39      0.301
     22.810          0.000      0.14      4.66      0.39      0.298
     22.961          0.000      0.14      4.63      0.39      0.295
     23.113          0.000      0.13      4.59      0.39      0.291
     23.264          0.000      0.13      4.55      0.39      0.288
     23.415          0.000      0.13      4.51      0.39      0.285
     23.567          0.000      0.13      4.47      0.39      0.282
     23.718          0.000      0.13      4.43      0.39      0.278
     23.869          0.000      0.13      4.39      0.39      0.275
     24.021          0.000      0.12      4.36      0.39      0.272
     24.172          0.000      0.00      4.30      0.39      0.267
--------------------------------------------------------------------------
```

```
****************************************************************************
                      SMALL AREA UNIT HYDROGRAPH MODEL
============================================================================
         (C) Copyright 1989-2008 Advanced Engineering Software (aes)
             Ver. 15.0  Release Date: 04/01/2008  License ID 1420

                           Analysis prepared by:

                               CA Engineering
                        13821 Newport Ave., Ste 110
                             Tustin, Ca. 92780


****************************************************************************
----------------------------------------------------------------------------

 Problem Descriptions:

  10 YR BASIN ROUTING

----------------------------------------------------------------------------


    RATIONAL METHOD CALIBRATION COEFFICIENT = 1.05
    TOTAL CATCHMENT AREA(ACRES) =    8.98
    SOIL-LOSS RATE, Fm,(INCH/HR) =  0.170
    LOW LOSS FRACTION = 0.390
    TIME OF CONCENTRATION(MIN.) =  9.01
    SMALL AREA PEAK Q COMPUTED USING PEAK FLOW RATE FORMULA
    USER SPECIFIED RAINFALL VALUES ARE USED
    RETURN FREQUENCY(YEARS) =  10
       5-MINUTE POINT RAINFALL VALUE(INCHES) =  0.22
      30-MINUTE POINT RAINFALL VALUE(INCHES) =  0.57
       1-HOUR   POINT RAINFALL VALUE(INCHES) =  0.80
       3-HOUR   POINT RAINFALL VALUE(INCHES) =  1.31
       6-HOUR   POINT RAINFALL VALUE(INCHES) =  1.79
      24-HOUR   POINT RAINFALL VALUE(INCHES) =  3.29

----------------------------------------------------------------------------

    TOTAL CATCHMENT   RUNOFF  VOLUME(ACRE-FEET) =     1.68
    TOTAL CATCHMENT SOIL-LOSS VOLUME(ACRE-FEET) =     0.79

****************************************************************************
  TIME     VOLUME       Q    0.        5.0      10.0      15.0      20.0
 (HOURS)    (AF)      (CFS)
----------------------------------------------------------------------------
  0.08      0.0000      0.00  Q         .         .         .         .
  0.23      0.0022      0.35  Q         .         .         .         .
  0.38      0.0065      0.35  Q         .         .         .         .
  0.53      0.0108      0.35  Q         .         .         .         .
  0.68      0.0152      0.35  Q         .         .         .         .
  0.83      0.0196      0.36  Q         .         .         .         .
  0.98      0.0240      0.36  Q         .         .         .         .
  1.13      0.0285      0.36  Q         .         .         .         .
  1.28      0.0329      0.36  Q         .         .         .         .
  1.43      0.0374      0.36  Q         .         .         .         .
  1.58      0.0419      0.36  Q         .         .         .         .
  1.73      0.0465      0.37  Q         .         .         .         .
  1.88      0.0511      0.37  Q         .         .         .         .
  2.03      0.0557      0.37  Q         .         .         .         .
  2.18      0.0603      0.37  Q         .         .         .         .
```

```
   2.33       0.0649       0.38  Q          .          .          .          .
   2.48       0.0696       0.38  Q          .          .          .          .
   2.64       0.0743       0.38  Q          .          .          .          .
   2.79       0.0791       0.38  Q          .          .          .          .
   2.94       0.0839       0.39  Q          .          .          .          .
   3.09       0.0887       0.39  Q          .          .          .          .
   3.24       0.0935       0.39  Q          .          .          .          .
   3.39       0.0984       0.39  Q          .          .          .          .
   3.54       0.1033       0.40  Q          .          .          .          .
   3.69       0.1082       0.40  Q          .          .          .          .
   3.84       0.1132       0.40  Q          .          .          .          .
   3.99       0.1182       0.40  Q          .          .          .          .
   4.14       0.1232       0.41  Q          .          .          .          .
   4.29       0.1283       0.41  Q          .          .          .          .
   4.44       0.1334       0.41  Q          .          .          .          .
   4.59       0.1385       0.42  Q          .          .          .          .
   4.74       0.1437       0.42  Q          .          .          .          .
   4.89       0.1489       0.42  Q          .          .          .          .
   5.04       0.1542       0.43  Q          .          .          .          .
   5.19       0.1595       0.43  Q          .          .          .          .
   5.34       0.1648       0.43  Q          .          .          .          .
   5.49       0.1702       0.43  Q          .          .          .          .
   5.64       0.1756       0.44  Q          .          .          .          .
   5.79       0.1811       0.44  Q          .          .          .          .
   5.94       0.1866       0.45  Q          .          .          .          .
   6.09       0.1921       0.45  Q          .          .          .          .
   6.24       0.1977       0.45  Q          .          .          .          .
   6.39       0.2034       0.46  Q          .          .          .          .
   6.54       0.2091       0.46  Q          .          .          .          .
   6.69       0.2149       0.46  Q          .          .          .          .
   6.84       0.2207       0.47  Q          .          .          .          .
   6.99       0.2265       0.47  Q          .          .          .          .
   7.14       0.2324       0.48  Q          .          .          .          .
   7.29       0.2384       0.48  Q          .          .          .          .
   7.44       0.2444       0.49  Q          .          .          .          .
   7.59       0.2505       0.49  Q          .          .          .          .
   7.74       0.2566       0.50  Q          .          .          .          .
   7.89       0.2628       0.50  .Q         .          .          .          .
   8.04       0.2691       0.51  .Q         .          .          .          .
   8.19       0.2754       0.51  .Q         .          .          .          .
   8.34       0.2819       0.52  .Q         .          .          .          .
   8.49       0.2883       0.52  .Q         .          .          .          .
   8.64       0.2949       0.53  .Q         .          .          .          .
   8.79       0.3015       0.54  .Q         .          .          .          .
   8.94       0.3082       0.54  .Q         .          .          .          .
   9.09       0.3150       0.55  .Q         .          .          .          .
   9.24       0.3218       0.56  .Q         .          .          .          .
   9.39       0.3287       0.56  .Q         .          .          .          .
   9.54       0.3358       0.57  .Q         .          .          .          .
   9.69       0.3429       0.58  .Q         .          .          .          .
   9.84       0.3501       0.59  .Q         .          .          .          .
   9.99       0.3574       0.59  .Q         .          .          .          .
  10.14       0.3648       0.60  .Q         .          .          .          .
  10.29       0.3723       0.61  .Q         .          .          .          .
  10.44       0.3800       0.62  .Q         .          .          .          .
  10.59       0.3877       0.63  .Q         .          .          .          .
  10.74       0.3956       0.64  .Q         .          .          .          .
  10.89       0.4035       0.65  .Q         .          .          .          .
  11.04       0.4116       0.66  .Q         .          .          .          .
  11.19       0.4199       0.67  .Q         .          .          .          .
  11.34       0.4283       0.68  .Q         .          .          .          .
  11.49       0.4368       0.69  .Q         .          .          .          .
  11.65       0.4455       0.71  .Q         .          .          .          .
```

```
11.80      0.4544      0.72  .Q        .         .         .         .
11.95      0.4634      0.74  .Q        .         .         .         .
12.10      0.4726      0.75  .Q        .         .         .         .
12.25      0.4822      0.79  .Q        .         .         .         .
12.40      0.4920      0.80  .Q        .         .         .         .
12.55      0.5021      0.82  .Q        .         .         .         .
12.70      0.5124      0.84  .Q        .         .         .         .
12.85      0.5230      0.87  .Q        .         .         .         .
13.00      0.5338      0.88  .Q        .         .         .         .
13.15      0.5450      0.91  .Q        .         .         .         .
13.30      0.5564      0.93  .Q        .         .         .         .
13.45      0.5682      0.97  .Q        .         .         .         .
13.60      0.5803      0.99  .Q        .         .         .         .
13.75      0.5929      1.03  . Q       .         .         .         .
13.90      0.6059      1.06  . Q       .         .         .         .
14.05      0.6194      1.12  . Q       .         .         .         .
14.20      0.6334      1.15  . Q       .         .         .         .
14.35      0.6482      1.22  . Q       .         .         .         .
14.50      0.6636      1.26  . Q       .         .         .         .
14.65      0.6798      1.35  . Q       .         .         .         .
14.80      0.6969      1.41  . Q       .         .         .         .
14.95      0.7152      1.54  .  Q      .         .         .         .
15.10      0.7348      1.62  .  Q      .         .         .         .
15.25      0.7561      1.81  .  Q      .         .         .         .
15.40      0.7794      1.94  .  Q      .         .         .         .
15.55      0.8070      2.50  .   Q     .         .         .         .
15.70      0.8406      2.93  .    Q    .         .         .         .
15.85      0.8887      4.82  .        Q.         .         .         .
16.00      0.9600      6.67  .         .  Q      .         .         .
16.15      1.1091     17.36  .         .         .         .   Q     .
16.30      1.2395      3.65  .      Q  .         .         .         .
16.45      1.2759      2.23  .   Q     .         .         .         .
16.60      1.3004      1.71  .  Q      .         .         .         .
16.75      1.3201      1.47  . Q       .         .         .         .
16.90      1.3373      1.31  . Q       .         .         .         .
17.05      1.3528      1.18  . Q       .         .         .         .
17.20      1.3668      1.09  . Q       .         .         .         .
17.35      1.3799      1.01  . Q       .         .         .         .
17.50      1.3920      0.95  .Q        .         .         .         .
17.65      1.4035      0.90  .Q        .         .         .         .
17.80      1.4143      0.85  .Q        .         .         .         .
17.95      1.4246      0.81  .Q        .         .         .         .
18.10      1.4345      0.78  .Q        .         .         .         .
18.25      1.4438      0.73  .Q        .         .         .         .
18.40      1.4527      0.70  .Q        .         .         .         .
18.55      1.4612      0.68  .Q        .         .         .         .
18.70      1.4695      0.65  .Q        .         .         .         .
18.85      1.4775      0.63  .Q        .         .         .         .
19.00      1.4852      0.61  .Q        .         .         .         .
19.15      1.4927      0.60  .Q        .         .         .         .
19.30      1.5000      0.58  .Q        .         .         .         .
19.45      1.5072      0.57  .Q        .         .         .         .
19.60      1.5141      0.55  .Q        .         .         .         .
19.75      1.5209      0.54  .Q        .         .         .         .
19.90      1.5275      0.53  .Q        .         .         .         .
20.05      1.5340      0.52  .Q        .         .         .         .
20.20      1.5403      0.51  .Q        .         .         .         .
20.35      1.5465      0.49  Q         .         .         .         .
20.51      1.5526      0.49  Q         .         .         .         .
20.66      1.5586      0.48  Q         .         .         .         .
20.81      1.5644      0.47  Q         .         .         .         .
20.96      1.5702      0.46  Q         .         .         .         .
21.11      1.5758      0.45  Q         .         .         .         .
```

```
  21.26      1.5814      0.44  Q         .         .         .         .
  21.41      1.5868      0.44  Q         .         .         .         .
  21.56      1.5922      0.43  Q         .         .         .         .
  21.71      1.5975      0.42  Q         .         .         .         .
  21.86      1.6027      0.42  Q         .         .         .         .
  22.01      1.6079      0.41  Q         .         .         .         .
  22.16      1.6130      0.41  Q         .         .         .         .
  22.31      1.6180      0.40  Q         .         .         .         .
  22.46      1.6229      0.39  Q         .         .         .         .
  22.61      1.6278      0.39  Q         .         .         .         .
  22.76      1.6326      0.38  Q         .         .         .         .
  22.91      1.6373      0.38  Q         .         .         .         .
  23.06      1.6420      0.38  Q         .         .         .         .
  23.21      1.6466      0.37  Q         .         .         .         .
  23.36      1.6512      0.37  Q         .         .         .         .
  23.51      1.6557      0.36  Q         .         .         .         .
  23.66      1.6602      0.36  Q         .         .         .         .
  23.81      1.6646      0.35  Q         .         .         .         .
  23.96      1.6690      0.35  Q         .         .         .         .
  24.11      1.6733      0.35  Q         .         .         .         .
  24.26      1.6754      0.00  Q         .         .         .         .
 ----------------------------------------------------------------------------

  Problem Descriptions:





============================================================================
     FLOW-THROUGH DETENTION BASIN MODEL

     SPECIFIED BASIN CONDITIONS ARE AS FOLLOWS:
     CONSTANT HYDROGRAPH TIME UNIT(MINUTES) =    9.010
     DEAD STORAGE(AF) =       0.00
     SPECIFIED DEAD STORAGE(AF) FILLED =       0.00
     ASSUMED INITIAL DEPTH(FEET) IN STORAGE BASIN =    0.00


                    INFLOW
                      |
                      |
                      |
                      V               __effective depth
                -------------         |   (and volume)
                |           |    |    |
                | detention |    |....V.............
                |   basin   |<-->|          outflow
                |           |    |.........__________
                -------------    |         |   \
                      |          | storage |     basin outlet
                      V          -----------
                   OUTFLOW


     DEPTH-VS.-STORAGE AND DEPTH-VS.-DISCHARGE INFORMATION:
     TOTAL NUMBER OF BASIN DEPTH INFORMATION ENTRIES =  10
     *BASIN-DEPTH  STORAGE    OUTFLOW  **BASIN-DEPTH  STORAGE    OUTFLOW  *
     *   (FEET)  (ACRE-FEET)   (CFS)   **   (FEET)  (ACRE-FEET)   (CFS)   *
     *      0.000      0.000      0.000**      1.000      0.035      0.388*
     *      2.000      0.095      0.388**      3.000      0.166      0.388*
     *      4.000      0.242      0.388**      5.000      0.326      0.388*
```

```
     *      6.000     0.406     0.388**     7.000     0.478     0.388*
     *      8.000     0.535     0.388**     9.000     0.541     0.388*
----------------------------------------------------------------------------
     BASIN STORAGE, OUTFLOW AND DEPTH ROUTING VALUES:
      INTERVAL   DEPTH   {S-O*DT/2}   {S+O*DT/2}
       NUMBER   (FEET)   (ACRE-FEET)  (ACRE-FEET)
           1     0.00       0.00000      0.00000
           2     1.00       0.03254      0.03736
           3     2.00       0.09232      0.09714
           4     3.00       0.16358      0.16840
           5     4.00       0.23989      0.24471
           6     5.00       0.32325      0.32807
           7     6.00       0.40331      0.40813
           8     7.00       0.47591      0.48073
           9     8.00       0.53238      0.53720
          10     9.00       0.53905      0.54387
     WHERE S=STORAGE(AF);O=OUTFLOW(AF/MIN.);DT=UNIT INTERVAL(MIN.)
----------------------------------------------------------------------------
     DETENTION BASIN ROUTING RESULTS:
     NOTE: COMPUTED BASIN DEPTH, OUTFLOW, AND STORAGE QUANTITIES
           OCCUR AT THE GIVEN TIME. BASIN INFLOW VALUES REPRESENT THE
           AVERAGE INFLOW DURING THE RECENT HYDROGRAPH UNIT INTERVAL.

        TIME  DEAD-STORAGE  INFLOW  EFFECTIVE  OUTFLOW  EFFECTIVE
       (HRS)   FILLED(AF)    (CFS)  DEPTH(FT)   (CFS)   VOLUME(AF)
----------------------------------------------------------------------------
       0.082        0.000     0.00      0.00     0.00      0.000
       0.232        0.000     0.35      0.12     0.02      0.004
       0.383        0.000     0.35      0.22     0.06      0.008
       0.533        0.000     0.35      0.31     0.10      0.011
       0.683        0.000     0.35      0.38     0.13      0.013
       0.833        0.000     0.36      0.45     0.16      0.016
       0.983        0.000     0.36      0.51     0.19      0.018
       1.133        0.000     0.36      0.57     0.21      0.020
       1.284        0.000     0.36      0.61     0.23      0.021
       1.434        0.000     0.36      0.65     0.25      0.023
       1.584        0.000     0.36      0.69     0.26      0.024
       1.734        0.000     0.37      0.72     0.27      0.025
       1.884        0.000     0.37      0.75     0.29      0.026
       2.034        0.000     0.37      0.78     0.30      0.027
       2.185        0.000     0.37      0.80     0.31      0.028
       2.335        0.000     0.38      0.83     0.32      0.029
       2.485        0.000     0.38      0.84     0.32      0.030
       2.635        0.000     0.38      0.86     0.33      0.030
       2.785        0.000     0.38      0.88     0.34      0.031
       2.935        0.000     0.39      0.89     0.34      0.031
       3.086        0.000     0.39      0.91     0.35      0.032
       3.236        0.000     0.39      0.92     0.35      0.032
       3.386        0.000     0.39      0.93     0.36      0.033
       3.536        0.000     0.40      0.94     0.36      0.033
       3.686        0.000     0.40      0.95     0.37      0.033
       3.836        0.000     0.40      0.96     0.37      0.034
       3.987        0.000     0.40      0.97     0.38      0.034
       4.137        0.000     0.41      0.98     0.38      0.034
       4.287        0.000     0.41      0.99     0.38      0.035
       4.437        0.000     0.41      1.00     0.39      0.035
       4.587        0.000     0.42      1.01     0.39      0.035
       4.737        0.000     0.42      1.01     0.39      0.036
       4.888        0.000     0.42      1.02     0.39      0.036
       5.038        0.000     0.43      1.03     0.39      0.037
       5.188        0.000     0.43      1.04     0.39      0.037
       5.338        0.000     0.43      1.05     0.39      0.038
       5.488        0.000     0.43      1.06     0.39      0.038
```

```
 5.638        0.000     0.44      1.07     0.39      0.039
 5.789        0.000     0.44      1.08     0.39      0.040
 5.939        0.000     0.45      1.09     0.39      0.040
 6.089        0.000     0.45      1.10     0.39      0.041
 6.239        0.000     0.45      1.12     0.39      0.042
 6.389        0.000     0.46      1.13     0.39      0.043
 6.539        0.000     0.46      1.15     0.39      0.044
 6.690        0.000     0.46      1.16     0.39      0.045
 6.840        0.000     0.47      1.18     0.39      0.046
 6.990        0.000     0.47      1.20     0.39      0.047
 7.140        0.000     0.48      1.22     0.39      0.048
 7.290        0.000     0.48      1.24     0.39      0.049
 7.440        0.000     0.49      1.26     0.39      0.050
 7.591        0.000     0.49      1.28     0.39      0.052
 7.741        0.000     0.50      1.30     0.39      0.053
 7.891        0.000     0.50      1.32     0.39      0.054
 8.041        0.000     0.51      1.35     0.39      0.056
 8.191        0.000     0.51      1.38     0.39      0.057
 8.342        0.000     0.52      1.40     0.39      0.059
 8.492        0.000     0.52      1.43     0.39      0.061
 8.642        0.000     0.53      1.46     0.39      0.062
 8.792        0.000     0.54      1.49     0.39      0.064
 8.942        0.000     0.54      1.52     0.39      0.066
 9.092        0.000     0.55      1.56     0.39      0.068
 9.242        0.000     0.56      1.59     0.39      0.070
 9.393        0.000     0.56      1.63     0.39      0.072
 9.543        0.000     0.57      1.67     0.39      0.075
 9.693        0.000     0.58      1.70     0.39      0.077
 9.843        0.000     0.59      1.75     0.39      0.080
 9.993        0.000     0.59      1.79     0.39      0.082
10.143        0.000     0.60      1.83     0.39      0.085
10.294        0.000     0.61      1.88     0.39      0.087
10.444        0.000     0.62      1.93     0.39      0.090
10.594        0.000     0.63      1.98     0.39      0.093
10.744        0.000     0.64      2.02     0.39      0.096
10.894        0.000     0.65      2.07     0.39      0.100
11.044        0.000     0.66      2.12     0.39      0.103
11.195        0.000     0.67      2.16     0.39      0.106
11.345        0.000     0.68      2.22     0.39      0.110
11.495        0.000     0.69      2.27     0.39      0.114
11.645        0.000     0.71      2.33     0.39      0.118
11.795        0.000     0.72      2.38     0.39      0.122
11.945        0.000     0.74      2.44     0.39      0.126
12.096        0.000     0.75      2.51     0.39      0.131
12.246        0.000     0.79      2.58     0.39      0.136
12.396        0.000     0.80      2.65     0.39      0.141
12.546        0.000     0.82      2.72     0.39      0.146
12.696        0.000     0.84      2.80     0.39      0.152
12.846        0.000     0.87      2.89     0.39      0.158
12.997        0.000     0.88      2.97     0.39      0.164
13.147        0.000     0.91      3.06     0.39      0.170
13.297        0.000     0.93      3.15     0.39      0.177
13.447        0.000     0.97      3.24     0.39      0.184
13.597        0.000     0.99      3.34     0.39      0.192
13.747        0.000     1.03      3.44     0.39      0.200
13.898        0.000     1.06      3.55     0.39      0.208
14.048        0.000     1.12      3.67     0.39      0.217
14.198        0.000     1.15      3.80     0.39      0.227
14.348        0.000     1.22      3.93     0.39      0.237
14.498        0.000     1.26      4.07     0.39      0.248
14.648        0.000     1.35      4.21     0.39      0.260
14.799        0.000     1.41      4.36     0.39      0.273
14.949        0.000     1.54      4.53     0.39      0.287
```

```
15.099        0.000     1.62      4.72     0.39      0.302
15.249        0.000     1.81      4.93     0.39      0.320
15.399        0.000     1.94      5.17     0.39      0.339
15.549        0.000     2.50      5.49     0.39      0.365
15.700        0.000     2.93      5.89     0.39      0.397
15.850        0.000     4.82      6.63     0.39      0.452
16.000        0.000     6.67      7.91     0.39      0.530
16.150     * BASIN CAPACITY EXCEEDED:  BASIN DATA IS EXTRAPOLATED *
16.150        0.000    17.36     38.82     0.39      0.740
16.300     * BASIN CAPACITY EXCEEDED:  BASIN DATA IS EXTRAPOLATED *
16.300        0.000     3.65     44.89     0.39      0.781
16.451     * BASIN CAPACITY EXCEEDED:  BASIN DATA IS EXTRAPOLATED *
16.451        0.000     2.23     48.31     0.39      0.804
16.601     * BASIN CAPACITY EXCEEDED:  BASIN DATA IS EXTRAPOLATED *
16.601        0.000     1.71     50.77     0.39      0.820
16.751     * BASIN CAPACITY EXCEEDED:  BASIN DATA IS EXTRAPOLATED *
16.751        0.000     1.47     52.78     0.39      0.833
16.901     * BASIN CAPACITY EXCEEDED:  BASIN DATA IS EXTRAPOLATED *
16.901        0.000     1.31     54.49     0.39      0.845
17.051     * BASIN CAPACITY EXCEEDED:  BASIN DATA IS EXTRAPOLATED *
17.051        0.000     1.18     55.97     0.39      0.855
17.201     * BASIN CAPACITY EXCEEDED:  BASIN DATA IS EXTRAPOLATED *
17.201        0.000     1.09     57.27     0.39      0.863
17.351     * BASIN CAPACITY EXCEEDED:  BASIN DATA IS EXTRAPOLATED *
17.351        0.000     1.01     58.43     0.39      0.871
17.502     * BASIN CAPACITY EXCEEDED:  BASIN DATA IS EXTRAPOLATED *
17.502        0.000     0.95     59.47     0.39      0.878
17.652     * BASIN CAPACITY EXCEEDED:  BASIN DATA IS EXTRAPOLATED *
17.652        0.000     0.90     60.42     0.39      0.884
17.802     * BASIN CAPACITY EXCEEDED:  BASIN DATA IS EXTRAPOLATED *
17.802        0.000     0.85     61.28     0.39      0.890
17.952     * BASIN CAPACITY EXCEEDED:  BASIN DATA IS EXTRAPOLATED *
17.952        0.000     0.81     62.07     0.39      0.895
18.102     * BASIN CAPACITY EXCEEDED:  BASIN DATA IS EXTRAPOLATED *
18.102        0.000     0.78     62.79     0.39      0.900
18.253     * BASIN CAPACITY EXCEEDED:  BASIN DATA IS EXTRAPOLATED *
18.253        0.000     0.73     63.43     0.39      0.904
18.403     * BASIN CAPACITY EXCEEDED:  BASIN DATA IS EXTRAPOLATED *
18.403        0.000     0.70     64.01     0.39      0.908
18.553     * BASIN CAPACITY EXCEEDED:  BASIN DATA IS EXTRAPOLATED *
18.553        0.000     0.68     64.54     0.39      0.912
18.703     * BASIN CAPACITY EXCEEDED:  BASIN DATA IS EXTRAPOLATED *
18.703        0.000     0.65     65.04     0.39      0.915
18.853     * BASIN CAPACITY EXCEEDED:  BASIN DATA IS EXTRAPOLATED *
18.853        0.000     0.63     65.49     0.39      0.918
19.003     * BASIN CAPACITY EXCEEDED:  BASIN DATA IS EXTRAPOLATED *
19.003        0.000     0.61     65.91     0.39      0.921
19.153     * BASIN CAPACITY EXCEEDED:  BASIN DATA IS EXTRAPOLATED *
19.153        0.000     0.60     66.30     0.39      0.924
19.304     * BASIN CAPACITY EXCEEDED:  BASIN DATA IS EXTRAPOLATED *
19.304        0.000     0.58     66.66     0.39      0.926
19.454     * BASIN CAPACITY EXCEEDED:  BASIN DATA IS EXTRAPOLATED *
19.454        0.000     0.57     66.99     0.39      0.928
19.604     * BASIN CAPACITY EXCEEDED:  BASIN DATA IS EXTRAPOLATED *
19.604        0.000     0.55     67.30     0.39      0.930
19.754     * BASIN CAPACITY EXCEEDED:  BASIN DATA IS EXTRAPOLATED *
19.754        0.000     0.54     67.58     0.39      0.932
19.904     * BASIN CAPACITY EXCEEDED:  BASIN DATA IS EXTRAPOLATED *
19.904        0.000     0.53     67.84     0.39      0.934
20.055     * BASIN CAPACITY EXCEEDED:  BASIN DATA IS EXTRAPOLATED *
20.055        0.000     0.52     68.08     0.39      0.936
20.205     * BASIN CAPACITY EXCEEDED:  BASIN DATA IS EXTRAPOLATED *
20.205        0.000     0.51     68.30     0.39      0.937
```

```
      20.355     * BASIN CAPACITY EXCEEDED:  BASIN DATA IS EXTRAPOLATED *
      20.355        0.000     0.49     68.49     0.39      0.938
      20.505     * BASIN CAPACITY EXCEEDED:  BASIN DATA IS EXTRAPOLATED *
      20.505        0.000     0.49     68.68     0.39      0.939
      20.655     * BASIN CAPACITY EXCEEDED:  BASIN DATA IS EXTRAPOLATED *
      20.655        0.000     0.48     68.84     0.39      0.941
      20.805     * BASIN CAPACITY EXCEEDED:  BASIN DATA IS EXTRAPOLATED *
      20.805        0.000     0.47     68.99     0.39      0.942
      20.955     * BASIN CAPACITY EXCEEDED:  BASIN DATA IS EXTRAPOLATED *
      20.955        0.000     0.46     69.12     0.39      0.942
      21.106     * BASIN CAPACITY EXCEEDED:  BASIN DATA IS EXTRAPOLATED *
      21.106        0.000     0.45     69.24     0.39      0.943
      21.256     * BASIN CAPACITY EXCEEDED:  BASIN DATA IS EXTRAPOLATED *
      21.256        0.000     0.44     69.34     0.39      0.944
      21.406     * BASIN CAPACITY EXCEEDED:  BASIN DATA IS EXTRAPOLATED *
      21.406        0.000     0.44     69.44     0.39      0.945
      21.556     * BASIN CAPACITY EXCEEDED:  BASIN DATA IS EXTRAPOLATED *
      21.556        0.000     0.43     69.51     0.39      0.945
      21.706     * BASIN CAPACITY EXCEEDED:  BASIN DATA IS EXTRAPOLATED *
      21.706        0.000     0.42     69.58     0.39      0.946
      21.857     * BASIN CAPACITY EXCEEDED:  BASIN DATA IS EXTRAPOLATED *
      21.857        0.000     0.42     69.63     0.39      0.946
      22.007     * BASIN CAPACITY EXCEEDED:  BASIN DATA IS EXTRAPOLATED *
      22.007        0.000     0.41     69.68     0.39      0.946
      22.157     * BASIN CAPACITY EXCEEDED:  BASIN DATA IS EXTRAPOLATED *
      22.157        0.000     0.41     69.71     0.39      0.946
      22.307     * BASIN CAPACITY EXCEEDED:  BASIN DATA IS EXTRAPOLATED *
      22.307        0.000     0.40     69.73     0.39      0.947
      22.457     * BASIN CAPACITY EXCEEDED:  BASIN DATA IS EXTRAPOLATED *
      22.457        0.000     0.39     69.75     0.39      0.947
      22.607     * BASIN CAPACITY EXCEEDED:  BASIN DATA IS EXTRAPOLATED *
      22.607        0.000     0.39     69.75     0.39      0.947
      22.757     * BASIN CAPACITY EXCEEDED:  BASIN DATA IS EXTRAPOLATED *
      22.757        0.000     0.38     69.74     0.39      0.947
      22.908     * BASIN CAPACITY EXCEEDED:  BASIN DATA IS EXTRAPOLATED *
      22.908        0.000     0.38     69.73     0.39      0.947
      23.058     * BASIN CAPACITY EXCEEDED:  BASIN DATA IS EXTRAPOLATED *
      23.058        0.000     0.38     69.70     0.39      0.946
      23.208     * BASIN CAPACITY EXCEEDED:  BASIN DATA IS EXTRAPOLATED *
      23.208        0.000     0.37     69.67     0.39      0.946
      23.358     * BASIN CAPACITY EXCEEDED:  BASIN DATA IS EXTRAPOLATED *
      23.358        0.000     0.37     69.63     0.39      0.946
      23.508     * BASIN CAPACITY EXCEEDED:  BASIN DATA IS EXTRAPOLATED *
      23.508        0.000     0.36     69.58     0.39      0.946
      23.659     * BASIN CAPACITY EXCEEDED:  BASIN DATA IS EXTRAPOLATED *
      23.659        0.000     0.36     69.53     0.39      0.945
      23.809     * BASIN CAPACITY EXCEEDED:  BASIN DATA IS EXTRAPOLATED *
      23.809        0.000     0.35     69.46     0.39      0.945
      23.959     * BASIN CAPACITY EXCEEDED:  BASIN DATA IS EXTRAPOLATED *
      23.959        0.000     0.35     69.39     0.39      0.944
      24.109     * BASIN CAPACITY EXCEEDED:  BASIN DATA IS EXTRAPOLATED *
      24.109        0.000     0.35     69.32     0.39      0.944
      24.259     * BASIN CAPACITY EXCEEDED:  BASIN DATA IS EXTRAPOLATED *
      24.259        0.000     0.00     68.59     0.39      0.939
---------------------------------------------------------------------------
```

APPENDIX D: PIPE, STREET & CONC.CHANNEL HYDRAULIC CALCULATIONS - STORAGE VOLUME & OUTFALL CALCULATIONS, Ybar CALCULATIONS & WQMP WORKSHEET H

PIPE FLOW HYDRAULIC CALCULATIONS

HGL Calculator

Pipe Diameter (D)	48	in
Flow (Q)	56	cfs
Manning's (n)	0.013	
Area (A)	12.56637061	ft.^{2}
Wetted Perimeter (P)	12.56637061	ft.
Hydraulic Slope (S_f)	0.00152	
Starting HGL	1600.50	
Length of Pipe	515.18	
Ending HGL	1601.28	
Head (h)	0.78	

STREET FLOWS FLOWMASTER CALCULATIONS

STREET Cross Section
Cross Section for Irregular Channel

Project Description	
Project File	c:\program files\haestad\fmw\816-1.fm2
Worksheet	STREET
Flow Element	Irregular Channel
Method	Manning's Formula
Solve For	Water Elevation

Section Data		
Wtd. Mannings Coefficient	0.015	
Channel Slope	0.005000	ft/ft
Water Surface Elevation	100.14	ft
Discharge	30.73	cfs

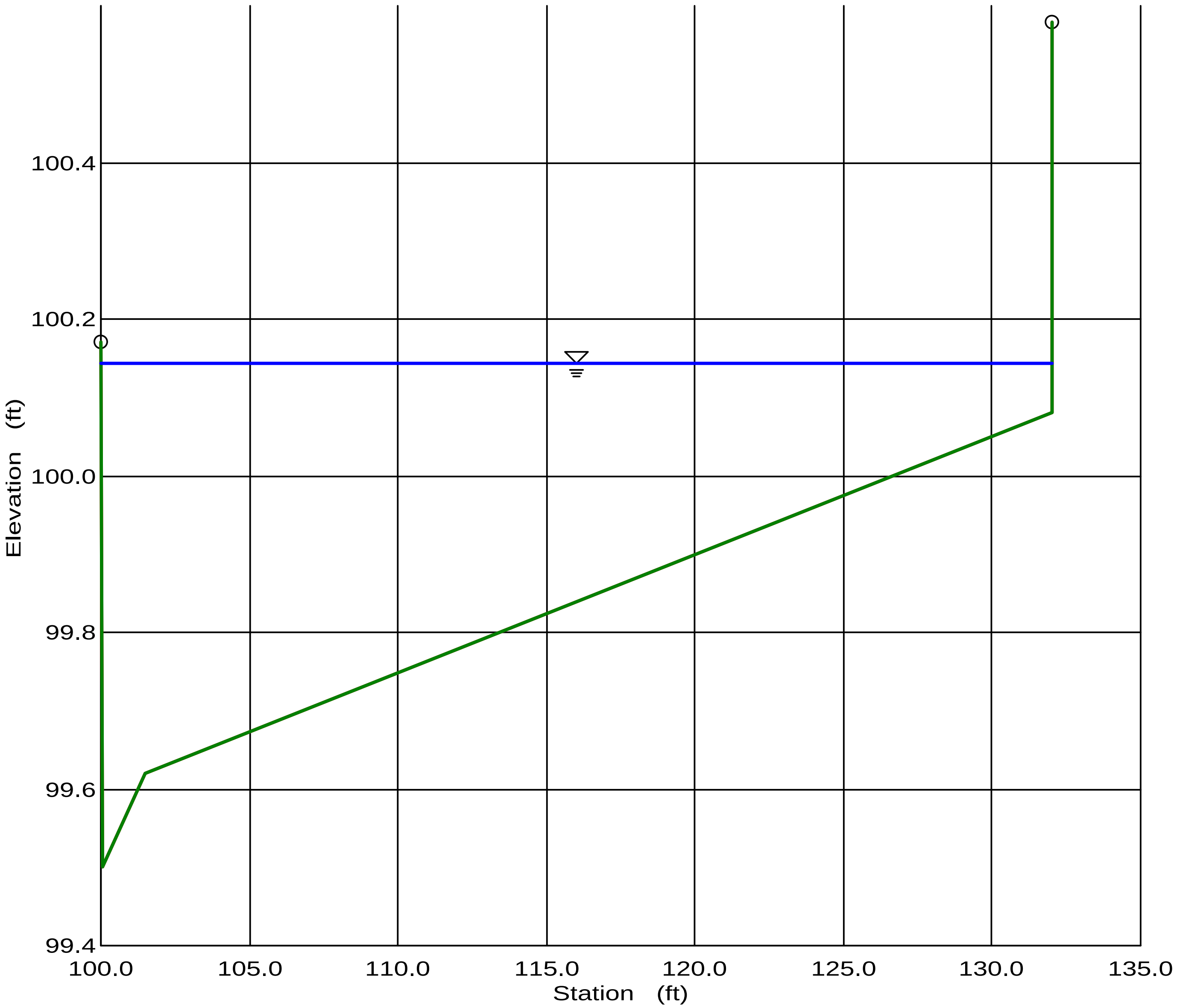

STREET WORKSHEET
Worksheet for Irregular Channel

Project Description	
Project File	c:\program files\haestad\fmw\816-1.fm2
Worksheet	STREET
Flow Element	Irregular Channel
Method	Manning's Formula
Solve For	Water Elevation

Input Data

Channel Slope 0.005000 ft/ft

Elevation range: 99.50 ft to 100.58 ft.

Station (ft)	Elevation (ft)	Start Station	End Station	Roughness
100.00	100.17	100.00	132.05	0.015
100.05	99.50			
101.50	99.62			
132.00	100.08			
132.05	100.58			

Discharge 30.73 cfs

Results		
Wtd. Mannings Coefficient	0.015	
Water Surface Elevation	100.14	ft
Flow Area	9.79	ft²
Wetted Perimeter	32.67	ft
Top Width	32.00	ft
Height	0.64	ft
Critical Depth	100.14	ft
Critical Slope	0.005000	ft/ft
Velocity	3.14	ft/s
Velocity Head	0.15	ft
Specific Energy	100.30	ft
Froude Number	1.00	

Flow is subcritical.

CONC. CHANNEL FLOWMASTER CALCULATIONS

4' CONC CHANNEL
Cross Section for Rectangular Channel

Project Description	
Project File	c:\program files\haestad\fmw\816-1.fm2
Worksheet	4' BOX
Flow Element	Rectangular Channel
Method	Manning's Formula
Solve For	Channel Depth

Section Data		
Mannings Coefficient	0.013	
Channel Slope	0.005000	ft/ft
Depth	1.20	ft
Bottom Width	4.00	ft
Discharge	31.85	cfs

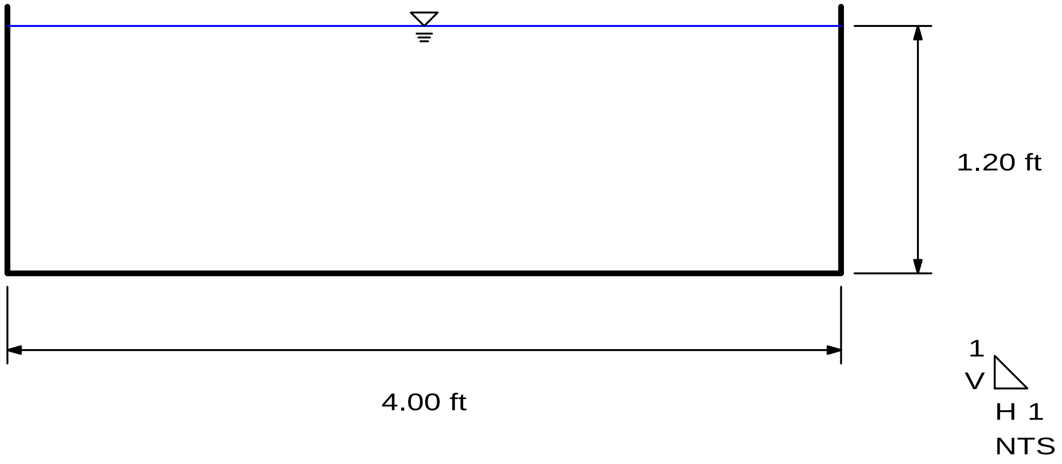

CONC CHANNEL
Worksheet for Rectangular Channel

Project Description	
Project File	c:\program files\haestad\fmw\816-1.fm2
Worksheet	4' BOX
Flow Element	Rectangular Channel
Method	Manning's Formula
Solve For	Channel Depth

Input Data		
Mannings Coefficient	0.013	
Channel Slope	0.005000	ft/ft
Bottom Width	4.00	ft
Discharge	31.85	cfs

Results		
Depth	1.20	ft
Flow Area	4.78	ft²
Wetted Perimeter	6.39	ft
Top Width	4.00	ft
Critical Depth	1.25	ft
Critical Slope	0.004370	ft/ft
Velocity	6.66	ft/s
Velocity Head	0.69	ft
Specific Energy	1.88	ft
Froude Number	1.07	
Flow is supercritical.		

AREA 1 STORAGE PIPE CALCULATIONS

VOLUME = 200 LF - DUAL 96" DIA. PIPE INF. FACILITY
INFILTRATION
INFILTRATION RATE - 3.99 "/HR (WQMP Worksheet H)
FACILITY AREA - 4,000 SF
TOTAL INF. = 3.99"/HR*(1/3600 SEC/HR*1/12FT/IN)*4,000SF=0.369CFS

OUTLET		STORAGE			
HEAD (h)	OUTLET FLOW (cfs)	CF/LF	CF	AF	TOTAL
1	0.369	7.25	1450	0.03329	0.03329
2	0.369	12.40	2480	0.05693	0.09022
3	0.369	14.78	2956	0.06786	0.15808
4	0.369	15.83	3166	0.07268	0.23076
5	0.369	17.29	3458	0.07938	0.31014
6	0.369	16.61	3321	0.07625	0.38639
7	0.369	15.06	3012	0.06915	0.45554
8	0.369	11.71	2343	0.05378	0.50932
9	0.369	7.00	1400	0.03214	0.54146

AREA 2 STORAGE PIPE CALCULATIONS

VOLUME = 20 LF - 96" DIA. PIPE INF. FACILITY
INFILTRATION
INFILTRATION RATE - 3.99 "/HR (WQMP Worksheet H)
FACILITY AREA - 200 SF
TOTAL INF. = 3.99"/HR*(1/3600 SEC/HR*1/12FT/IN)200SF=0.018CFS

OUTLET		STORAGE			
HEAD (h)	OUTLET FLOW (cfs)	CF/LF	CF	AF	TOTAL
1	0.018	3.63	73	0.00167	0.00167
2	0.018	6.20	124	0.00285	0.00451
3	0.018	7.39	148	0.00339	0.00791
4	0.018	7.92	158	0.00364	0.01154
5	0.018	8.65	173	0.00397	0.01551
6	0.018	8.30	166	0.00381	0.01933
7	0.018	7.53	151	0.00346	0.02278
8	0.018	5.86	117	0.00269	0.02547
9	0.018	3.50	70	0.00161	0.02708

TOTAL BOTH SITES

HEAD (h)	OUTLET (CFS)	STORAGE TOTAL
1	0.388	0.03495
2	0.388	0.09473
3	0.388	0.16599
4	0.388	0.24230
5	0.388	0.32566
6	0.388	0.40572
7	0.388	0.47832
8	0.388	0.53479
9	0.388	0.56854

ON -SITE YBAR CALCULATIONS

DEFINITIONS:

CN - CURVE NUMBER OF HYDRAULIC SOIL COVER
S - ESTIMATE OF TOTAL SOIL CAPACITY
Ia - INITIAL ABSTRACTION
Yj - 24-HR STORM RUNOFF YIELD FRACTION
Ybar - CATCHMENT LOW LOSS FRACTION

2 YEAR STORM						
		P24 =	2.14	in.		
SUBAREA	**ACRES**	**CN**	**S**	**Ia**	**Yj**	**Yj*Aj**
A1	2.28	73	3.70	0.74	0.18	0.41
A2	1.55	73	3.70	0.74	0.18	0.28
A3	2.84	73	3.70	0.74	0.18	0.51
A4	2	73	3.70	0.74	0.18	0.36
A5	0.28	73	3.70	0.74	0.18	0.05
TOTAL	**8.95**					
				Y=(∑Yj*Aj)/A	Y=	0.18
				Ybar=1-Y	**Ybar=**	**0.82**

ON-SITE 5 YEAR STORM						
		P24 =	2.77	in.		
SUBAREA	**ACRES**	**CN**	**S**	**Ia**	**Yj**	**Yj*Aj**
A1	2.28	73	3.70	0.74	0.26	0.59
A2	1.55	73	3.70	0.74	0.26	0.40
A3	2.84	73	3.70	0.74	0.26	0.74
A4	2	73	3.70	0.74	0.26	0.52
A5	0.28	73	3.70	0.74	0.26	0.07
TOTAL	**8.95**					
				Y=(∑Yj*Aj)/A	Y=	0.26
				Ybar=1-Y	**Ybar=**	**0.74**

ON-SITE 10 YEAR STORM

P24 = 3.29 in.

SUBAREA	ACRES	CN	S	Ia	Yj	Yj*Aj
A1	2.28	87	1.49	0.30	0.61	1.38
A2	1.55	87	1.49	0.30	0.61	0.94
A3	2.84	87	1.49	0.30	0.61	1.72
A4	2	87	1.49	0.30	0.61	1.21
A5	0.28	87	1.49	0.30	0.61	0.17
TOTAL	**8.95**					

Y=(∑Yj*Aj)/A Y= 0.61

Ybar=1-Y **Ybar= 0.39**

CN=87 is Weighted Average for 20% Landscape and 80% Impervious Area

ON-SITE 25 YEAR STORM

P24 = 3.99 in.

SUBAREA	ACRES	CN	S	Ia	Yj	Yj*Aj
A1	2.28	87	1.49	0.30	0.66	1.50
A2	1.55	87	1.49	0.30	0.66	1.02
A3	2.84	87	1.49	0.30	0.66	1.87
A4	2	87	1.49	0.30	0.66	1.32
A5	0.28	87	1.49	0.30	0.66	0.18
TOTAL	**8.95**					

Y=(∑Yj*Aj)/A Y= 0.66

Ybar=1-Y **Ybar= 0.34**

CN=87 is Weighted Average for 20% Landscape and 80% Impervious Area

ON-SITE 100 YEAR STORM

P24 = 5.08 in.

SUBAREA	ACRES	CN	S	Ia	Yj	Yj*Aj
A1	2.28	97	0.31	0.06	0.93	2.12
A2	1.55	97	0.31	0.06	0.93	1.44
A3	2.84	97	0.31	0.06	0.93	2.64
A4	2	97	0.31	0.06	0.93	1.86
A5	0.28	97	0.31	0.06	0.93	0.26
TOTAL	**8.95**					

Y=(∑Yj*Aj)/A Y= 0.93

Ybar=1-Y **Ybar= 0.07**

WORKSHEET H

Worksheet H: Factor of Safety and Design Infiltration Rate Worksheet (DA 1 & 2)

Factor Category		Factor Description	Assigned Weight (w)	Factor Value (v)	Product (p) p = w x v
A	Suitability Assessment	Soil assessment methods	0.25	2	.25
		Predominant soil texture	0.25	1	.25
		Site soil variability	0.25	1	.50
		Depth to groundwater / impervious layer	0.25	1	.25
		Suitability Assessment Safety Factor, $S_A = \Sigma p$			1.25
B	Design	Tributary area size	0.25	2	.50
		Level of pretreatment/ expected sediment loads	0.25	1	.25
		Redundancy	0.25	1	.25
		Compaction during construction	0.25	1	.25
		Design Safety Factor, $S_B = \Sigma p$			1.25
Combined Safety Factor, $S_{Total} = S_A \times S_B$					1.5625 (Use 2.0 per Note below)
Observed Infiltration Rate, inch/hr, $K_{observed}$ (corrected for test-specific bias) (Most conservative test result)					7.98
Design Infiltration Rate, in/hr, $K_{DESIGN} = K_{Observed} / S_{Total}$					3.99

Supporting Data

Briefly describe infiltration test and provide reference to test forms:

Note: The minimum combined adjustment factor shall not be less than 2.0 and the maximum combined adjustment factor shall not exceed 9.0.

EXHIBITS

EXHIBIT A: EXISTING CONDITION HYDROLOGY MAPS

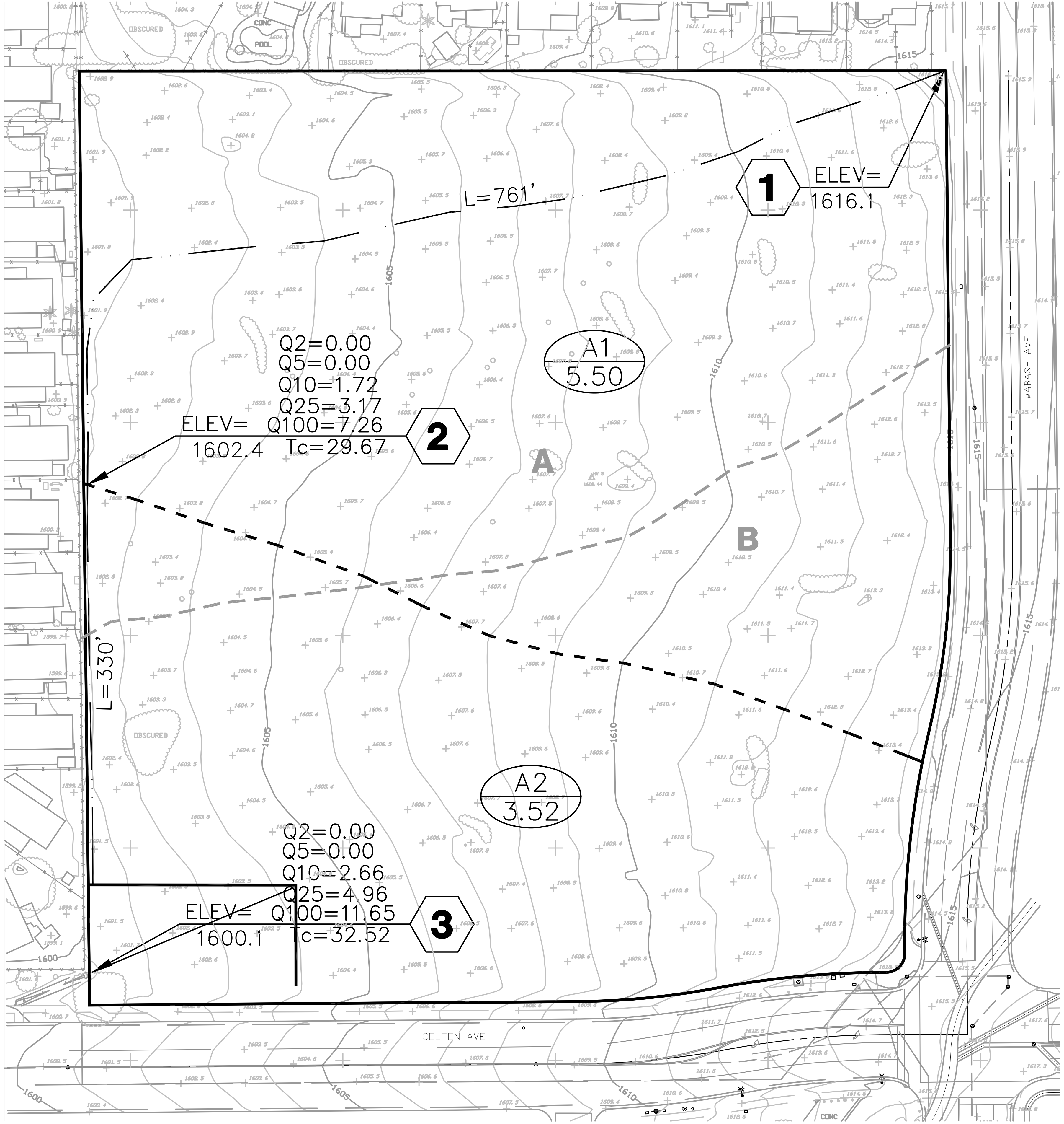

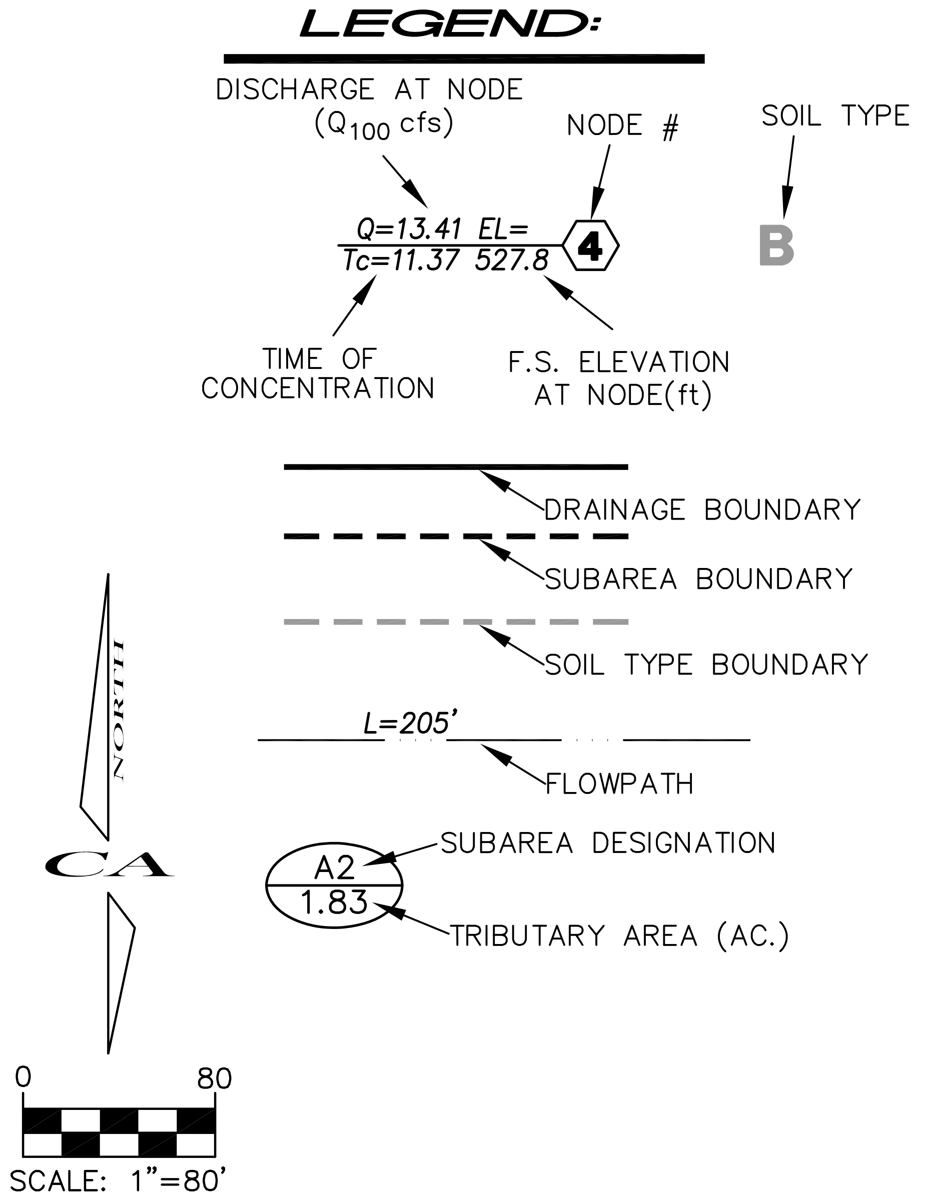

CITY OF REDLANDS

HYDROLOGY MAP
(EXISTING CONDITION)

COLTON & WABASH, REDLANDS

EXHIBIT B: PROPOSED CONDITION HYDROLOGY MAP

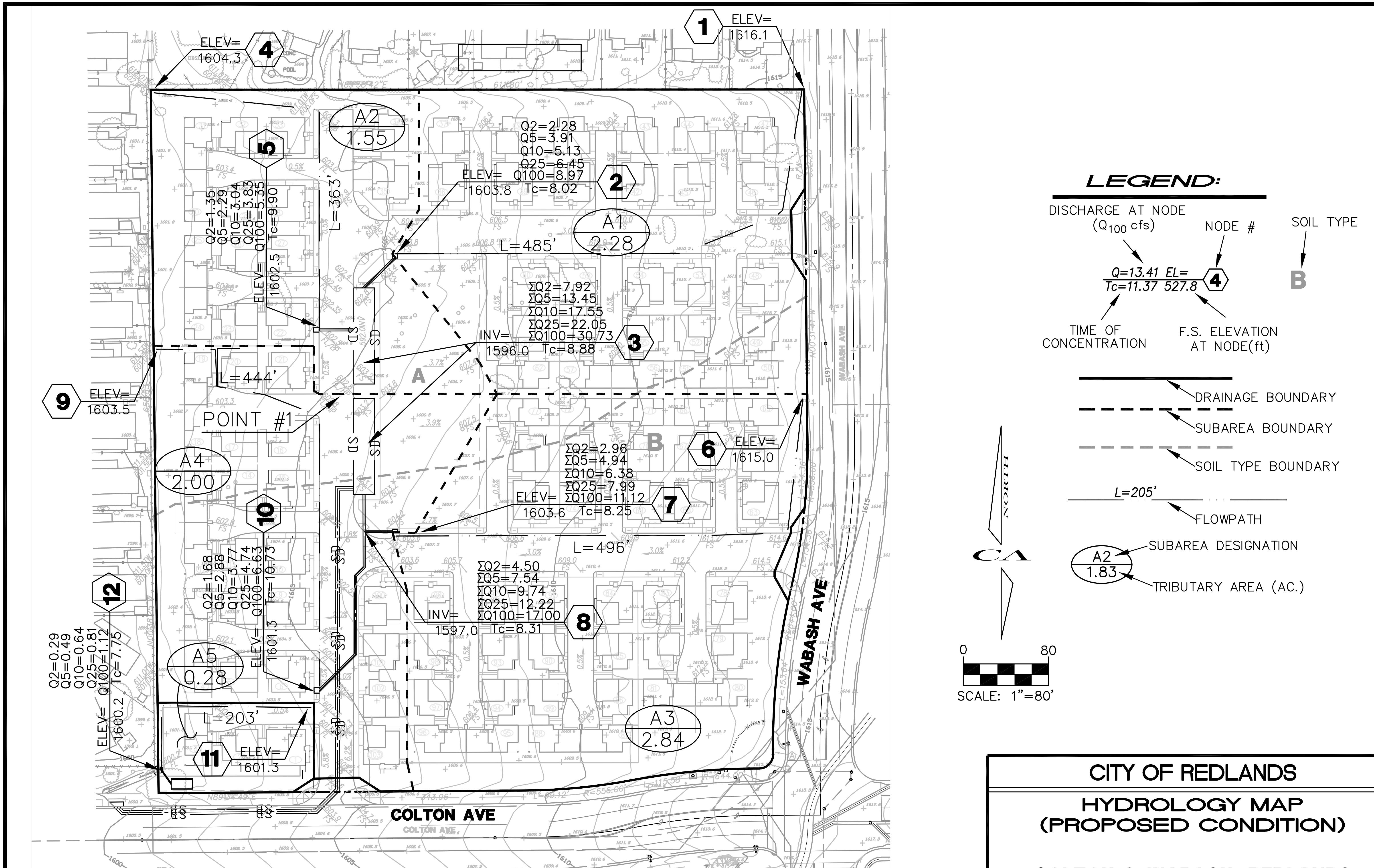

CITY OF REDLANDS

HYDROLOGY MAP
(PROPOSED CONDITION)

COLTON & WABASH, REDLANDS

EXHIBIT C: FIRM MAP

National Flood Hazard Layer FIRMette

FEMA

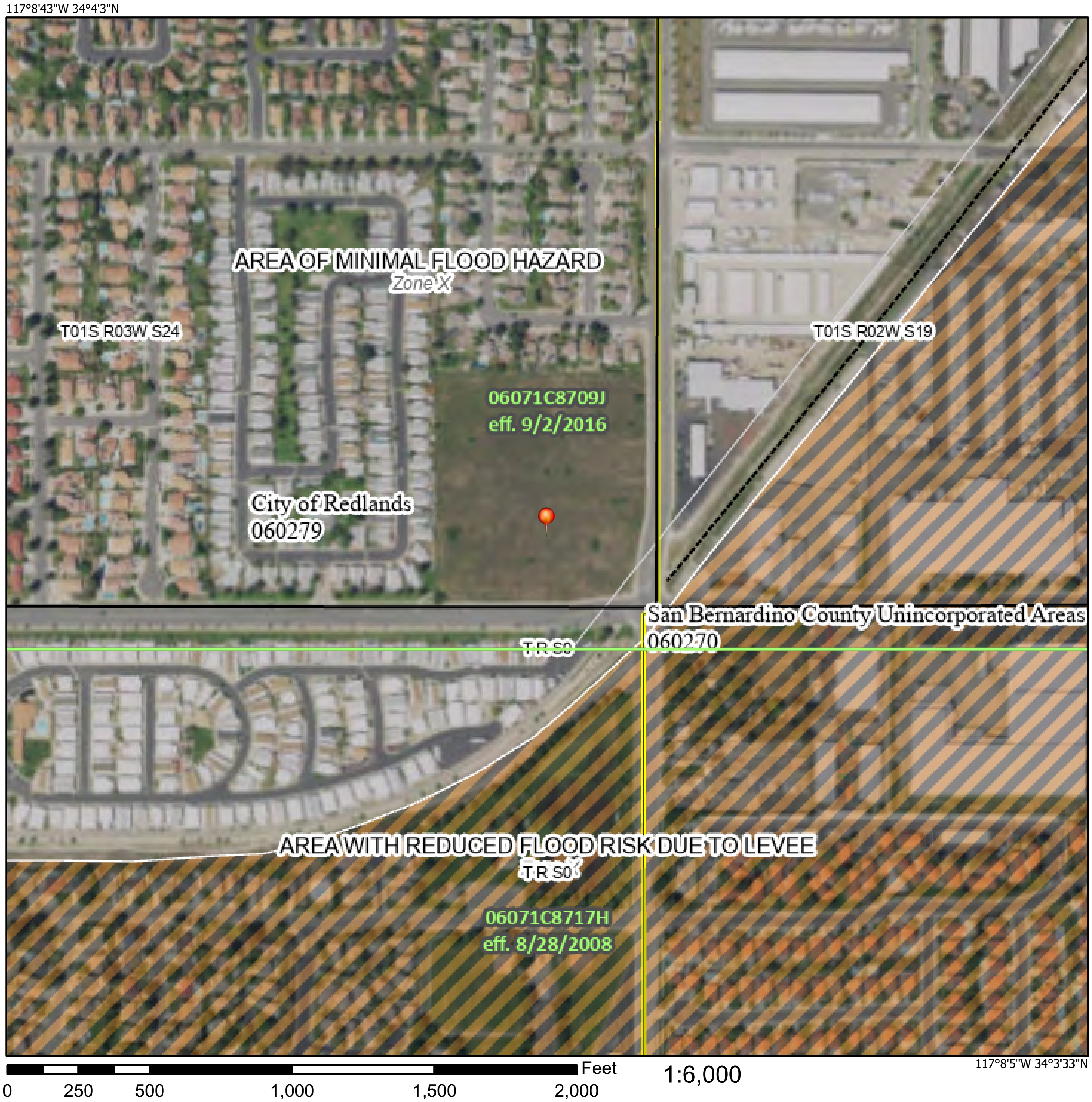

Basemap: USGS National Map: Orthoimagery: Data refreshed October, 2020

Legend

SEE FIS REPORT FOR DETAILED LEGEND AND INDEX MAP FOR FIRM PANEL LAYOUT

SPECIAL FLOOD HAZARD AREAS	🟦	Without Base Flood Elevation (BFE) *Zone A, V, A99*
		With BFE or Depth *Zone AE, AO, AH, VE, AR*
	▨	Regulatory Floodway
OTHER AREAS OF FLOOD HAZARD	🟧	0.2% Annual Chance Flood Hazard, Areas of 1% annual chance flood with average depth less than one foot or with drainage areas of less than one square mile *Zone X*
	▨	Future Conditions 1% Annual Chance Flood Hazard *Zone X*
	▨	Area with Reduced Flood Risk due to Levee. See Notes. *Zone X*
	▨	Area with Flood Risk due to Levee *Zone D*
OTHER AREAS	NO SCREEN	Area of Minimal Flood Hazard *Zone X*
	▭	Effective LOMRs
	🟧	Area of Undetermined Flood Hazard *Zone D*
GENERAL STRUCTURES	— — —	Channel, Culvert, or Storm Sewer
	IIIIIII	Levee, Dike, or Floodwall
OTHER FEATURES	B 20.2 17.5	Cross Sections with 1% Annual Chance Water Surface Elevation
	8 — — —	Coastal Transect
	~~ 513 ~~~	Base Flood Elevation Line (BFE)
	—	Limit of Study
	—	Jurisdiction Boundary
	--- ---	Coastal Transect Baseline
	- —	Profile Baseline
	—	Hydrographic Feature
MAP PANELS	☐	Digital Data Available
	☐	No Digital Data Available
	☒	Unmapped

N

The pin displayed on the map is an approximate point selected by the user and does not represent an authoritative property location.

This map complies with FEMA's standards for the use of digital flood maps if it is not void as described below. The basemap shown complies with FEMA's basemap accuracy standards

The flood hazard information is derived directly from the authoritative NFHL web services provided by FEMA. This map was exported on 7/18/2022 at 6:54 PM and does not reflect changes or amendments subsequent to this date and time. The NFHL and effective information may change or become superseded by new data over time.

This map image is void if the one or more of the following map elements do not appear: basemap imagery, flood zone labels, legend, scale bar, map creation date, community identifiers, FIRM panel number, and FIRM effective date. Map images for unmapped and unmodernized areas cannot be used for regulatory purposes.

EXHIBIT D: WQMP SITE PLAN

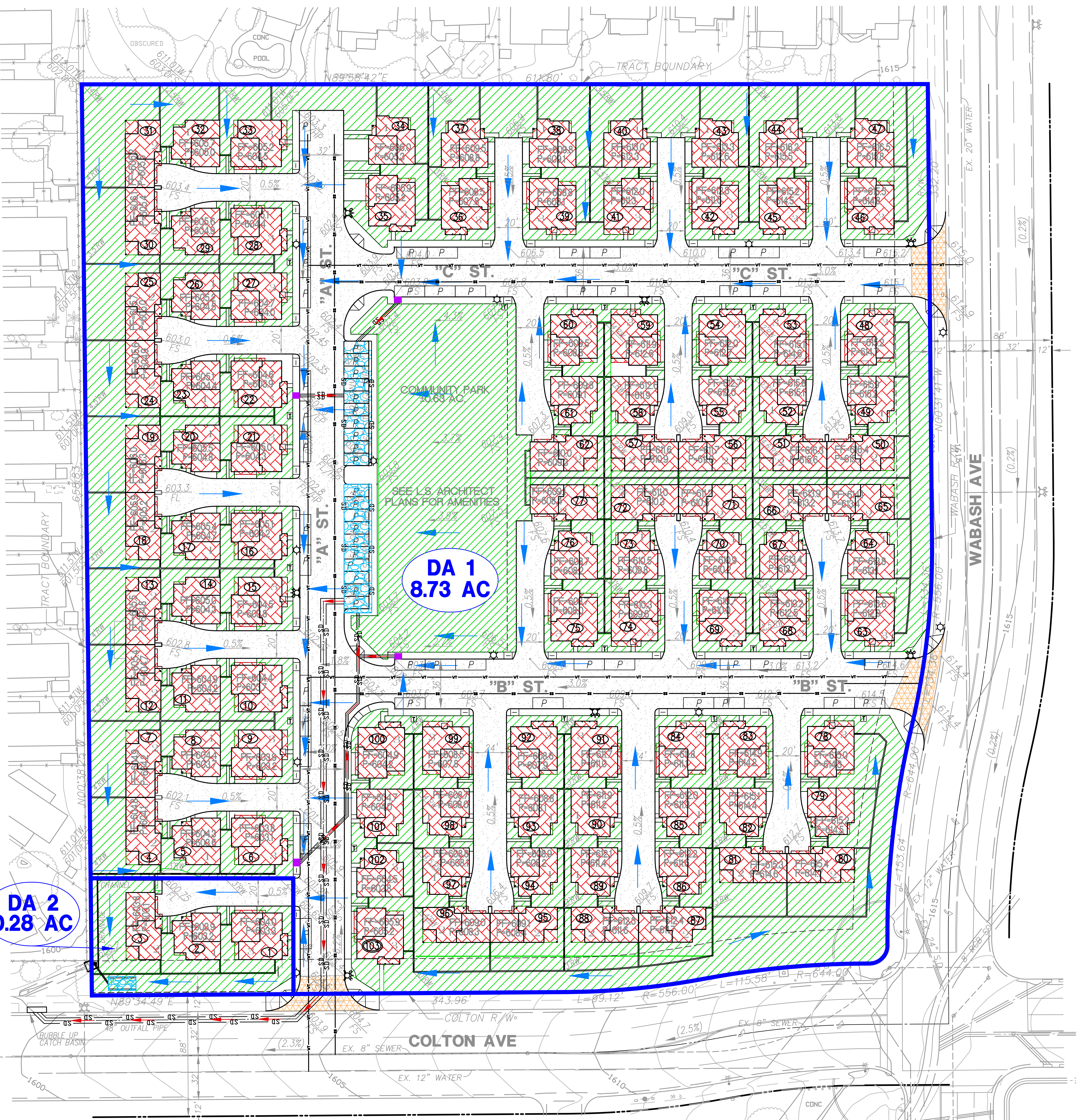

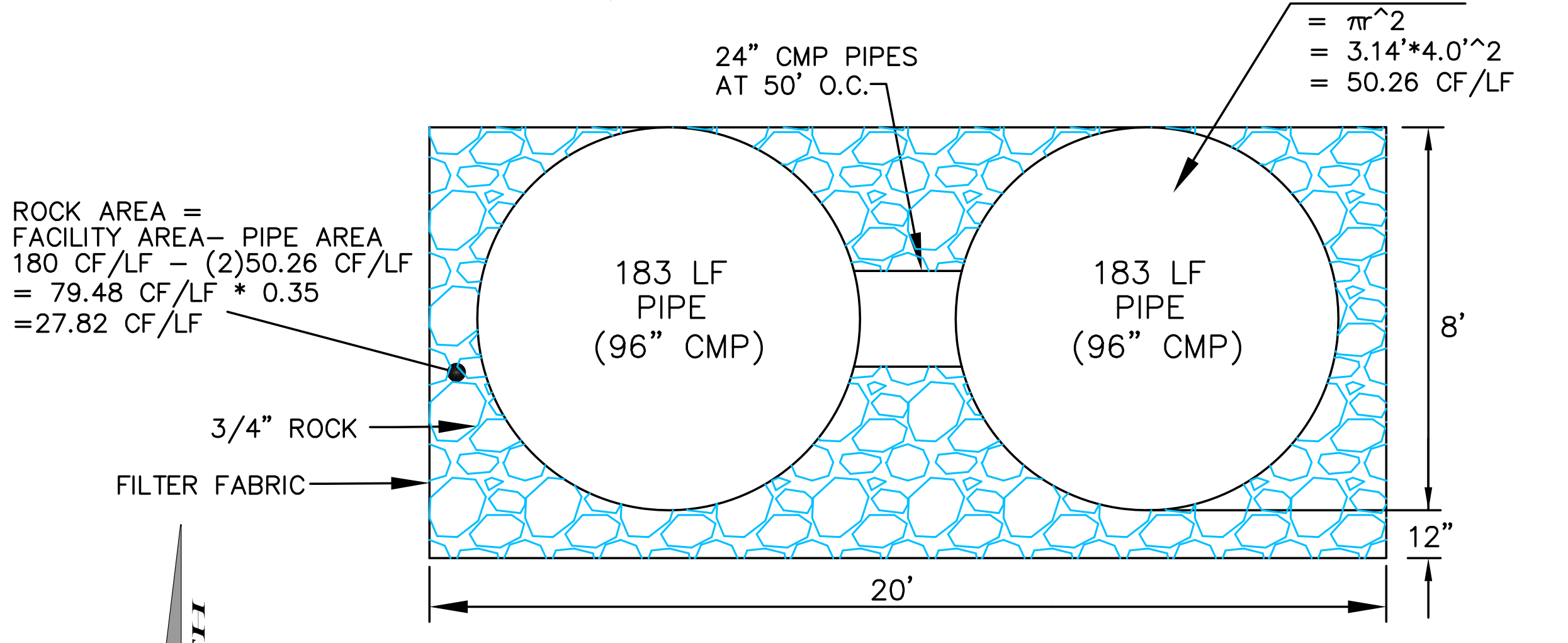

DUAL INFILTRATION BMP CROSS SECTION

SCALE: 1"=4'

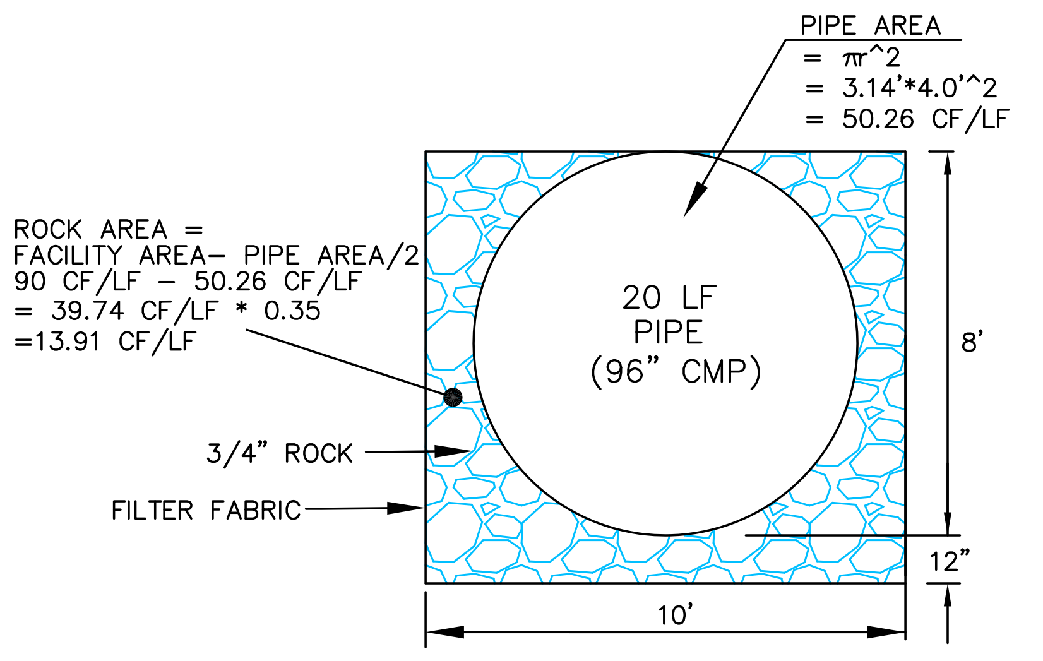

INFILTRATION BMP CROSS SECTION

SCALE: 1"=4'

GRAPHIC SCALE

0 50

(IN FEET)
1 inch = 50 ft.

BMP LEGEND

━━	DRAINAGE AREAS **DA 1**
→	SURFACE FLOW DIRECTION
→	STORM DRAIN FLOW DIRECTION
▨	UNDERGROUND INFILTRATION PIPE PER DETAIL HEREON
🟩	LANDSCAPE AREA EFFICIENT IRRIGATION LANDSCAPE AREA RUNOFF–MINIMIZING DESIGN
🟥	PROPOSED BUILDING
☐	ASPHALT CONCRETE DRIVE AISLES
▨	CONCRETE DRIVEWAY APPROACH
■	CATCH BASIN WITH INSERT FILTER & STORM DRAIN STENCIL SIGNAGE

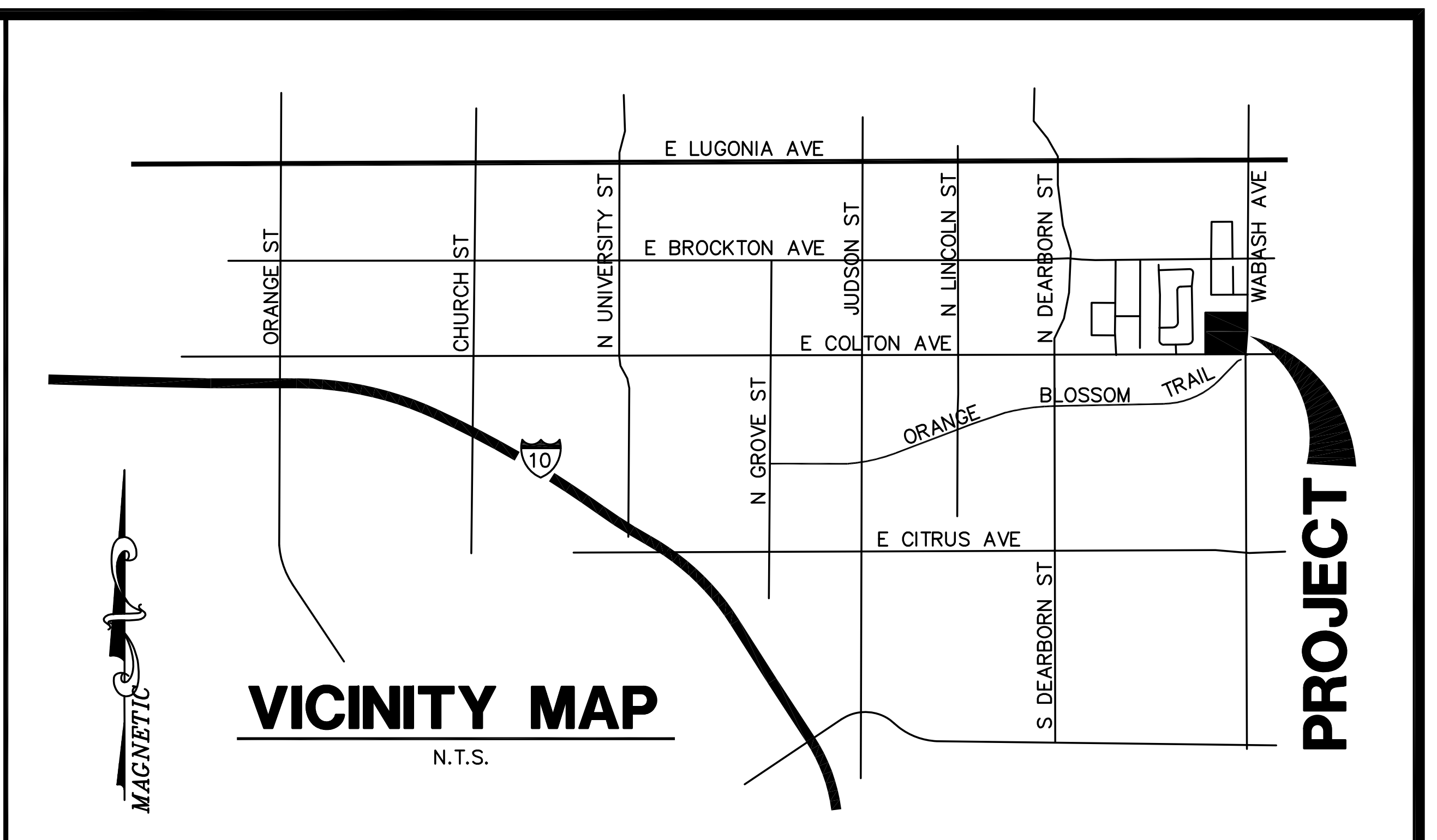

VICINITY MAP

N.T.S.

PROJECT DATA:

TOTAL SITE AREA OF PROPOSED
DEVELOPMENT: 9.01 AC (392,503 SF)

BUILDING AREA: 122,630 SF
DRIVEWAYS / DRIVE AISLES / PARKING AREAS: 95,896 SF
WALKWAYS / CONC. HARDSCAPE: 95,476 SF

78,501 SF LANDSCAPING PROVIDED
(20.0% PERVIOUS AREA)

CURRENT USE: VACANT
PROPOSED USE: RESIDENTIAL

WATERSHED:
SANTA ANA RIVER

LID DCV CALCULATION

AREA 1

AREA – 8.73 AC (380,199 SF)
RUNOFF COEFFICIENT (80% IMPERVIOUS)
$C = 0.858 * (0.80)^3 - 0.78 * (0.80)^2 + 0.774 * (0.80) + .04 = 0.599$
2YR 1 HR STORM – 0.491 IN
$P6 = 1.4807 * 0.491 = 0.727$ IN
DCV = 380,199 SF * 0.599 * 0.727 IN / 12IN/FT * 1.963 = 27,084 CF

BMP VOLUME CALCULATION

BMP VOLUME
PIPE CROSS SECTIONAL AREA – (50.26) * 2 CF/LF = 100.52 CF/LF
ROCK CROSS SECTIONAL AREA – 79.48 CF/LF ROCK AREA * .35 = 27.82 CF/LF
TOTAL CROSS SECTIONAL AREA – 128.34 CF/LF * 183 LF = 23,486 CF
EFFECTIVE DEPTH – 23,486 CF / 3,660 SF BOTTOM = 6.42'

Vret = (Pdesign/12 * SAinf * Tfill) + (SAres * Dres * Nagg)
Pdesign = 7.98" MEASURED / 2.00 S.F. = 3.99"/HR
SAinf = 3,660 SF
SAres = 3,660 SF
Tfill = 3 HRS
Dres = EFFECTIVE DEPTH = 6.42'
Nagg = 1.0 (EFFECTIVE DEPTH ACCOUNTED FOR ROCK)
Vret = (3.99/12 * 3,660 * 3) + (3,660 * 6.42 * 1)
Vret = 27,148 CF
BMP VOLUME (27,148 CF) > DCV VOLUME (27,084 CF)

EXISTING CN = 38 (AREA WEIGHTED)
PROPOSED CN = 84.8 (AREA WEIGHTED)
V_{HCOC}= VOLUME REDUCTION NEEDED TO MEET HCOC REQUIREMENTS
PRE–RV = PRE–DEVELOPED RUNOFF VOLUME = 2,615 CF
POST–RV = POST DEVELOPED RUNOFF VOLUME = 28,119 CF
V_{HCOC}= (POST–RV * 0.95) – PRE–RV = (28,199 CF * 0.95) – 2,615 CF
= 24,098 CF
BMP VOLUME (27,148 CF) > V_{HCOC} (24,098 CF)

LID DCV CALCULATION

AREA 2

AREA – 0.28 AC (12,304 SF)
RUNOFF COEFFICIENT (80% IMPERVIOUS)
$C = 0.858 * (0.80)^3 - 0.78 * (0.80)^2 + 0.774 * (0.80) + .04 = 0.599$
2YR 1 HR STORM – 0.491 IN
$P6 = 1.4807 * 0.594 = 0.727$ IN
DCV = 12,304 SF * 0.599 * 0.727 IN / 12IN/FT * 1.963 = 876 CF

BMP VOLUME CALCULATION

BMP VOLUME
PIPE CROSS SECTIONAL AREA – (50.26) CF/LF
ROCK CROSS SECTIONAL AREA – 39.74 CF/LF ROCK AREA * .35 = 13.91 CF/LF
TOTAL CROSS SECTIONAL AREA – 64.17 CF/LF * 20 LF = 1,283 CF
EFFECTIVE DEPTH – 1,283 CF / 200 SF BOTTOM = 6.42'

Vret = (Pdesign/12 * SAinf * Tfill) + (SAres * Dres * Nagg)
Pdesign = 7.98" MEASURED / 2.00 S.F. = 3.99"/HR
SAinf = 200 SF
SAres = 200 SF
Tfill = 3 HRS
Dres = EFFECTIVE DEPTH = 6.42'
Nagg = 1.0 (EFFECTIVE DEPTH ACCOUNTED FOR ROCK)
Vret = (3.99/12 * 200 * 3) + (200 * 6.42 * 1)
Vret = 1,484 CF
BMP VOLUME (1,484 CF) > DCV VOLUME (876 CF)

EXISTING CN = 61 (AREA WEIGHTED)
PROPOSED CN = 89.6 (AREA WEIGHTED)
V_{HCOC}= VOLUME REDUCTION NEEDED TO MEET HCOC REQUIREMENTS
PRE–RV = PRE–DEVELOPED RUNOFF VOLUME = 105 CF
POST–RV = POST DEVELOPED RUNOFF VOLUME = 1,218 CF
V_{HCOC}= (POST–RV * 0.95) – PRE–RV = (1,218 CF * 0.95) – 105 CF
= 1,052 CF
BMP VOLUME (1,484 CF) > V_{HCOC} (1,052 CF)

STENCIL SAMPLE*

*THE STENCIL SHALL BE BLUE ON A WHITE BACKGROUND WITH LETTERING 2–1/2" IN HEIGHT AND READING "NO DUMPING –DRAINS TO RIVER". A FISH OR SIMILAR WATER DEPENDENT CREATURE SILHOUETTE MAY BE INCLUDED SUBJECT TO CITY APPROVAL. IN LIEU OF A STENCIL, A CATCH BASIN CURB MARKER, CIRCULAR OR RECTANGULAR, AT LEAST 4" IN HEIGHT OR DIAMETER, MAY BE USED. THE MESSAGE WILL BE THE SAME AND IS SUBJECT TO CITY APPROVAL. A PAINTED CIRCULAR STENCIL SHALL NOT BE BIGGER THAN 8"IN DIAMETER. LEGIBILITY WILL BE CHECKED AND REPAINTED ANNUALLY.

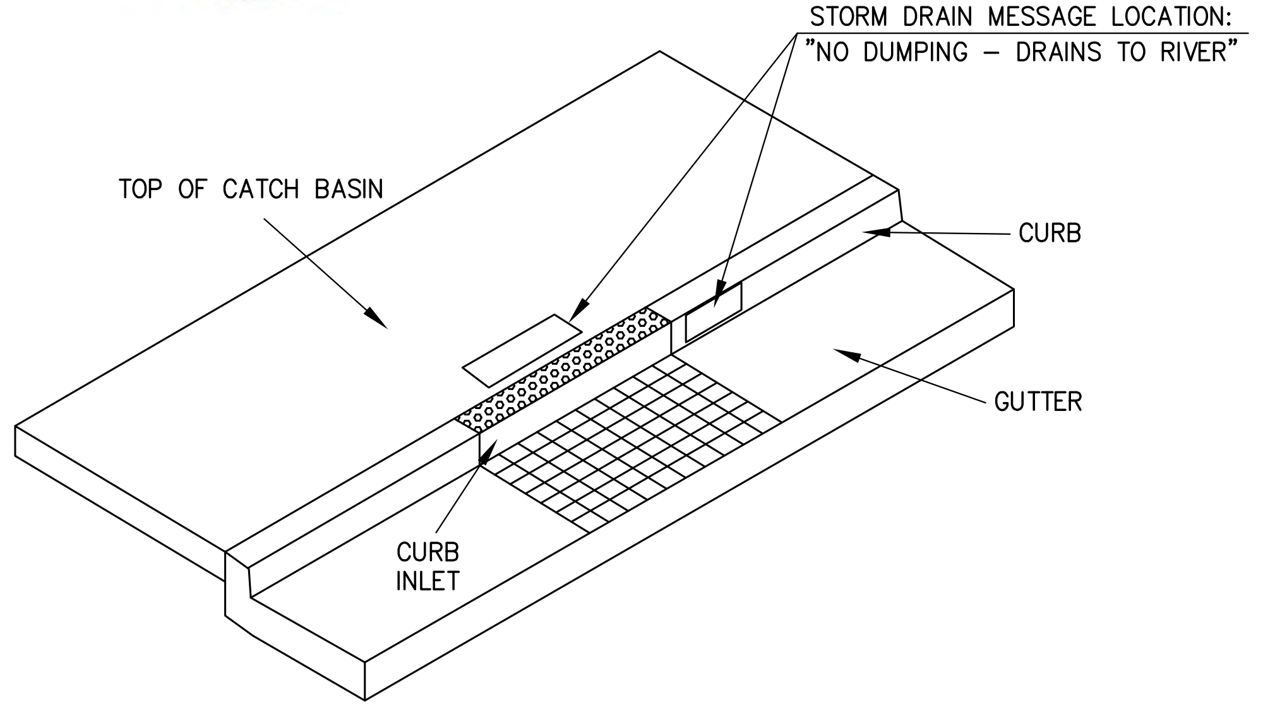

STORM DRAIN STENCIL SIGNAGE – CURB INLET

NTS

BMP LOCATIONS

AREA#1 – LATITUDE: 34.063951° / LONGITUDE: –117.140385°
AREA#2 – LATITUDE: 34.062953° / LONGITUDE: –117.140843°

FEASIBILITY CONSTRAINTS

THERE ARE NO FEASIBILITY CONSTRAINTS FOR INFILTRATION

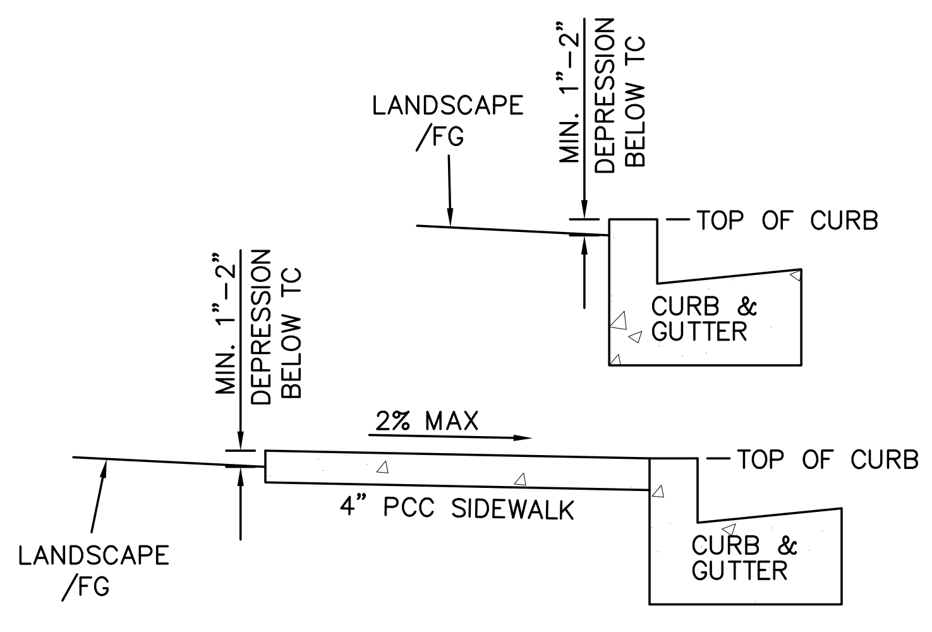

LANDSCAPE DEPRESSION DETAIL

SCALE: 1"=2'

FloGard®

Catch Basin Insert Filter

Curb Inlet Style DRAWING NO. FGP-0002

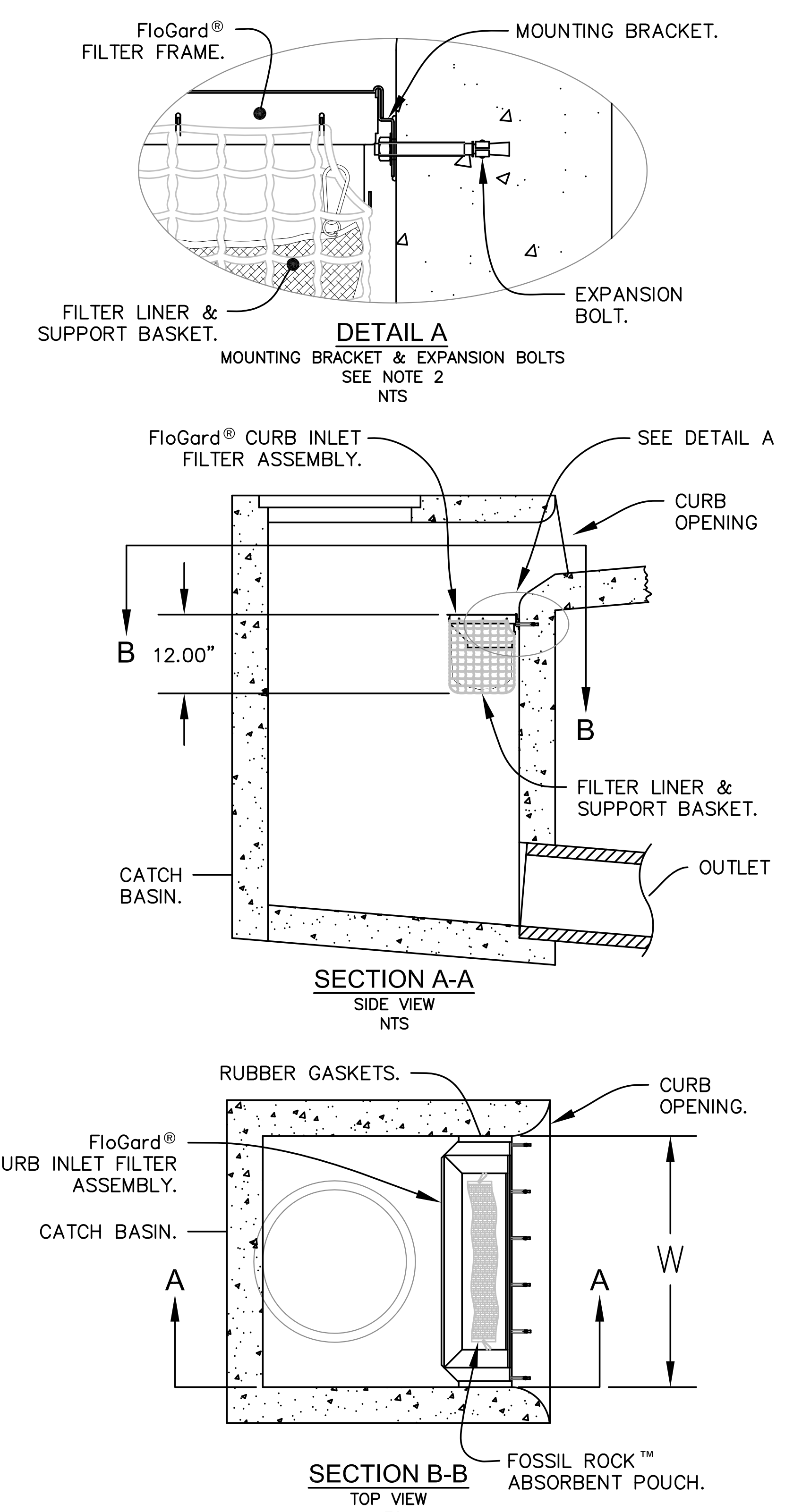

NOTES:

1. Filter insert shall have a high flow bypass feature.
2. Filter support frame shall be constructed from stainless steel Type 304.
3. Filter medium shall be Fossil Rock, installed and maintained in accordance with manufacturer specifications.
4. Storage capacity reflects 80% of maximum solids collection prior to impeding filtering bypass.

PRELIMINARY WQMP SITE PLAN
COLTON AVE + WABASH AVE
REDLANDS, CA

Soni 2012 Irrevocable Trusts
1423 Georgina Avenue Santa Monica
Santa Monica, CA 90402
(949) 922–7075
Contact: Vanita Soni Puri

FRED CORNWELL No. 45591

FRED CORNWELL R.C.E. 45591 DATE

PREPARED BY:
CA ENGINEERING, INC.
Planning . Engineering . Surveying
13821 NEWPORT AVE., STE 110
TUSTIN, CA 92780
949-724-9480 949-724-9484 FAX

DATE	BY	REVISION

SHEET
C1.3

DATE
Oct 05 2022

JOB NO.
816–1

Sht. C–2

EXHIBIT E: GEOTECHNICAL PERCOLATION TESTING REPORT

TGR

Geotechnical
Environmental
Hydrogeology
Material Testing
Construction Inspection

April 8, 2022 Project No. 22-7455

Vanita Soni Puri
1423 Georgina Ave.,
Santa Monica, CA 90402

Subject: Preliminary Geotechnical Investigation Report, Northwest Corner of E. Colton Avenue and N. Wabash Avenue, Redlands, California 92374, APN 0168-291-02.

Vanita,

In accordance with your request and authorization, TGR Geotechnical, Inc. (TGR) has performed a preliminary geotechnical investigation for the proposed development at the subject site in the city of Redlands, California. The subject site is an approximately 9-acre, undeveloped parcel of land covered in grass and vegetation. It is our understanding that the proposed development will consist of 103 single family homes with associated streets, driveways, parking, and a central common open park space. This report presents the findings of our geotechnical investigation, including site seismicity, settlement potential, infiltration rates and provides geotechnical design recommendations for the proposed improvements. The work was performed in general accordance with our proposal dated March 7, 2022.

Based on our investigation the proposed development is feasible from a geotechnical viewpoint provided the recommendations presented in this report are implemented during design and construction.

If you have any questions regarding this report, please do not hesitate to contact this office. We appreciate this opportunity to be of service.

Respectfully submitted,

TGR GEOTECHNICAL, INC.

Robert Aguilar

Robert Aguilar
Staff Engineer

SANJAY GOVIL
No. GE2382
EXP. 6/30/2022

EDWARD LOUIS BURROWS
No. 1750
CERTIFIED ENGINEERING GEOLOGIST

Sanjay Govil, PhD, PE, GE 2382
Principal Geotechnical Engineer

Edward L. Burrows, MS, PG, CEG 1750
Principal Engineering Geologist

Distribution: (1) Addressee

TGR GEOTECHNICAL
DBE & 8(a) firm
3037 S. HARBOR BLVD
SANTA ANA, CA 92704
P 714.641.7189 F 714.641.7190
www.tgrgeotech.com

ATTACHMENTS

Plate 1 – Boring Location Map

Figure 1 – Site Location Map
Figure 2 – Regional Geology Map
Figure 3 – Regional Fault Map
Figure 4 – Seismic Hazard Zone Map

Table 1 – Percolation Test Worksheet

Appendix A – References
Appendix B – Log of Borings
Appendix C – Laboratory Testing Procedures and Results
Appendix D – Site Seismic Design and Deaggregated Parameters
Appendix E – Standard Grading Specifications

INTRODUCTION

Site Descriptions and Proposed Project Development

The subject site is located on the northwest corner of E. Colton Avenue and N. Wabash Avenue in the city of Redlands, California (Figure 1). The subject site is an approximately 9-acre, undeveloped parcel of land covered in grass and vegetation. It is our understanding that the proposed development will consist of 103 single family homes with associated streets, driveways, parking, and a central common open park space. No grading plans were available at the time of this report. However, it is our understanding that minor cuts and fills will be required to reach design grades.

Scope of Work

The scope of work for this preliminary geotechnical investigation included the following:

- Site reconnaissance to assess current site conditions, mark boring locations and call Dig-Alert for utility clearance.
- Sampling and logging nine (9) borings utilizing a hollow stem drill rig to approximate depths ranging from 3 to 9 feet at the subject site to evaluate subsurface soil conditions. All borings encountered refusal due to cobbles. The borings were backfilled with cuttings and surface tamped.
- Percolation testing of the near surface soils at two (2) locations from depths of 5 to 9 feet below existing grade. The testing procedures followed the County of San Bernardino guidelines.
- Laboratory testing of selected samples to include in-situ moisture and dry density, maximum density and optimum moisture content, shear, consolidation, passing No. 200 sieve, corrosion series and R-value.
- Engineering analysis including infiltration rates, site seismicity, seismic settlement, foundation design and soils engineering/earthwork with respect to the suitability of the proposed development.
- Preparation of this report summarizing current subsurface soil conditions, findings, and presenting our recommendations for the proposed development.

Field Investigation

Field exploration was performed on March 15th, 2022 by members from our firm who logged the borings and obtained representative samples, which were subsequently transported to the laboratory for further review and testing. The approximate locations of the borings are indicated on the enclosed Boring Location Map (Plate 1).

The subsurface conditions were explored by drilling, sampling, and logging nine (9) borings with a truck mounted hollow stem auger drill rig. Borings B-1 through B-9 were advanced to approximate depths ranging from 3 to 9 feet below existing grade. All borings encountered refusal in cobbles and/or boulders. Subsequent to drilling, all borings were backfilled with excavated soil and surface tamped. The log of borings presenting soil conditions and descriptions are presented in Appendix B.

The drill rig was equipped with a sampling apparatus to allow for recovery of driven modified California Ring Sampler (CRS), 3-inch outside diameter, and 2.42-inch inside diameter and SPT samples.

The samples were driven using an automatic 140-pound hammer falling freely from a height of 30 inches. The blow counts for CRS were converted to equivalent SPT blow counts. Soil descriptions were entered on the logs in general accordance with the Unified Soil Classification System (USCS). Driven samples and bulk samples of the earth materials encountered at selected intervals were recovered from the borings. The locations and depths of the soil samples recovered are indicated on the boring logs in Appendix B.

Two (2) percolation test borings, B-5/P-1 and P-2, were advanced to an approximate depth of 9 feet below existing ground surface and percolation testing was performed at depths of approximately 5 to 9 feet below existing grade. Subsequent to percolation testing the borings were backfilled with excavated soils and surface tamped.

Percolation Testing

Upon completion of drilling and sampling Borings B-5/P-1 and P-2 were converted into a field percolation test well. Field percolation testing was performed in general accordance with the with the San Bernardino Technical Guidance for WQMP for sandy soils.

The boreholes were converted to field percolation test wells by placing approximately two inches of gravel at the bottom of the borehole, installing three-inch diameter PVC pipes and backfilling the annular space with gravel. A correction factor was applied to account for the placement of gravel.

Infiltration test rates were determined utilizing the referenced County of San Bernardino guidelines. Results of the infiltration testing are summarized in Table 1 below:

Table 1 – Infiltration Rates

Test Location	Test Depth (feet)	Infiltration Rate (Inches/hour)
B-5/P-1	5-9	10.45
P-2	5-9	7.98

Suitability Assessment Safety Factor

Factor values (v), for Factor Category A, were assigned according to the San Bernardino Technical Guidance Document for WQMP, VII.4.

Table 2 (below) presents assigned factor values and the calculated Suitability Assessment Safety Factor (Σp) in Worksheet H from the San Bernardino Technical Guidance Document for WQMP Appendix VII.

Table 2 – Worksheet H

Factor Category		Factor Description	Assigned Weight (w)	Factor Value (v)	Product (p) p = w * v
A	Suitability Assessment	Soil assessment methods	0.25	2	0.50
		Predominant soil texture	0.25	1	0.25
		Site soil variability	0.25	1	0.25
		Depth to groundwater / impervious layer	0.25	1	0.25
		Suitability Assessment Safety Factor, $S_A = \Sigma p$			1.25

The above values should be used in conjunction with Factor Category B parameters (to be determined by others) as specified in Worksheet H of the San Bernardino Technical Guidance Document for WQMP Appendix VII to evaluate the combined safety factor that should be applied to the tested infiltration rates.

Laboratory Testing

Laboratory tests were performed on representative samples to verify the field classification of the recovered samples and to evaluate the geotechnical properties of the subsurface soils. The following tests were performed:

- In-situ Moisture Content (ASTM D2216) and Dry Density (ASTM D7263);
- Maximum Dry Density and Optimum Moisture Content (ASTM D1557);
- Direct Shear Strength (ASTM D3080);
- Consolidation (ASTM D2435);
- Expansion Potential (ASTM D4829);
- Passing No. 200 Sieve (ASTM 1140);
- R-value (CAL 301); and
- Corrosion series:
    1. Soluble Sulfate (CAL.417A);
    2. Soluble Chlorides (CAL.422);
    3. Minimum Resistivity (CAL.643); and
    4. pH (CAL 747)

Laboratory tests for geotechnical characteristics were performed in general accordance with the ASTM procedures. The results of the in-situ moisture content and density tests are shown on the borings logs. The results of other laboratory tests are presented in Appendix C.

GEOTECHNICAL FINDINGS

Geology

Regional Geologic Setting

The project site is located in the east central portion of the Redlands 7.5-minute quadrangle, San Bernardino County, California. Per the Geologic Map of the Harrison Mountain/north ½ of Redlands quadrangle, California (Dibblee, 2004), the subject site is underlain by Quaternary alluvium, consisting of gravel and sand of stream channels. Figure 2 presents the Regional Geology Map.

Earth Units

Based on our subsurface investigation, the subject area is generally underlain by approximately 5 feet of light brown silty sand, with some gravel in a dry condition. The silty sand is underlain by sand, gravel and cobbles to an approximate depth of 9 feet below existing grade, the maximum depth explored. Detailed descriptions of the earth units encountered in our borings are presented in the log of the borings. (Appendix B)

Groundwater

Subsurface water was not encountered to a depth of approximately 9 feet below existing grade during the subsurface exploration.

USGS groundwater data from wells nearest to the subject site indicate a historic high groundwater of between 49 feet below existing grade and 1601 feet above NGVD 1929 (USGS 340346117080001 001S002W30C001S).

Seasonal and long-term fluctuations in the groundwater may occur as a result of variations in subsurface conditions, rainfall, run-off conditions and other factors. Therefore, variations from our observations may occur. Static groundwater is not anticipated to impact the proposed development.

Static groundwater is not anticipated to impact the proposed development.

Expansive Soil

Onsite soils have a tested expansion index of 0, correlating to a “very low” expansion potential. The recommendations provided in this report account for the expansion potential of the onsite soils.

Hydro Collapse

Laboratory testing indicates near surface soils undergo approximately 1% to 2% hydro collapse when inundated under load, correlating to a “low” potential for hydro collapse. The recommendations in this report account for the hydro collapse potential of near surface soils.

Cement Type and Corrosion

Based on laboratory testing concrete used should be designed in accordance with the provisions of ACI 318-14, Chapter 19 for Exposure Class S0: Cement with a minimum unconfined compressive strength of 2,500 psi, and for Exposure Class C1 (Moderate) – Concrete exposed to moisture but not a significant source of chlorides, per ACI 318-14 Table 19.3.1.1.

Corrosion tests indicate a mild corrosion potential for ferrous metals exposed to site soils.

TGR does not practice corrosion engineering. If needed, a qualified specialist should review the site conditions and evaluate the corrosion potential of the site soil to the proposed improvements and to provide the appropriate corrosion mitigations for the project.

Seismic Review

Faulting and Seismicity

The subject site, like the rest of Southern California, is located within a seismically active region as a result of being located near the active margin between the North American and Pacific tectonic plates. The principal source of seismic activity is movement along the northwest-trending regional faults such as the San Andreas, San Jacinto and Elsinore fault zones. These fault systems produce approximately 5 to 35 millimeters per year of slip between the plates.

We consider the most significant geologic hazard to be the potential for moderate to strong seismic shaking that is likely to occur at the subject site. The subject site is located in the highly seismic Southern California region within the influence of several faults that are considered to be Holocene-active or pre-Holocene faults. A Holocene-active fault is defined by the State of California as a fault that has exhibited surface displacement within the Holocene time (about the last 11,700 years). A pre-Holocene fault is defined by the State as a fault whose history of past movement is older than 11,700 years ago and does not meet the criteria for a Holocene-active fault.

These Holocene-active and pre-Holocene faults are capable of producing potentially damaging seismic shaking at the site. It is anticipated that the subject site will periodically experience ground acceleration as the result of small to moderate magnitude earthquakes. Other active faults without surface expression (blind faults) or other potentially active seismic sources that are not currently zoned and may be capable of generating an earthquake are known to be present under in the region.

The subject site is not included within any Earthquake Fault Zones as created by the Alquist-Priolo Earthquake Fault Zoning Act (Hart, 1997). Our review of geologic literature pertaining to the site area indicates that there are no known active or potentially active faults located within or immediately adjacent to the subject property.

The nearest fault to the subject site is the Redlands fault mapped approximately 0.7 miles southeast of the site. Other nearby faults include the Reservoir Canyon fault mapped approximately 1.6 miles to the southeast of the site, the Crafton Hills fault mapped approximately 2.9 miles southeast of the site, the Western Heights fault mapped approximately 3.1 miles southeast of the site, the South Branch San Andreas fault mapped approximately 3.1 miles northeast of the site, the Chicken Hill fault mapped approximately 4.3 miles southeast of the site, the Live Oak Canyon fault mapped approximately 4.4 miles southwest of the site, the Mill Creek fault mapped approximately 5.1 miles northeast of the site and the Loma Linda fault mapped approximately 5.6 miles to the southwest of the site. The Regional Fault Map, Figure 3, shows the location of the subject site in respect to the regional faults.

Secondary Seismic Hazards

Surface Fault Rupture and Ground Shaking

Since no known faults are located within the site, surface fault rupture is not anticipated. However, due to the close proximity of known active and potentially active faults, severe ground shaking should be expected during the life of the proposed structures.

Liquefaction

Liquefaction is a seismic phenomenon in which loose, saturated, fine-grained granular soils behave similarly to a fluid when subjected to high-intensity ground shaking. Liquefaction occurs when these ground conditions exist: 1) Shallow groundwater; 2) Low density, fine, clean sandy soils; and 3) High-intensity ground motion. Effects of liquefaction can include sand boils, settlement, and bearing capacity failures below foundations.

A review of the San Bernardino County General Plan: Geologic Hazard Overlays, Map FH31C indicates that the subject site is not located within an area mapped as having a potential for earthquake induced liquefaction (Figure 4).

Based on the above and depth to groundwater, potential for liquefaction is considered to be negligible.

Seismically Induced Settlement

Ground accelerations generated from a seismic event can produce settlements in sands or in granular earth materials both above and below the groundwater table. This phenomenon is often referred to as seismic settlement and is most common in relatively clean sands, although it can also occur in other soil materials. Based on the nature and density of site soils encountered, seismic settlement is anticipated to be negligible.

Landsliding

Landsliding involves downhill motion of earth materials during or subsequent to earth shaking. Historically, landslides triggered by earthquakes have been a significant cause of damage. Areas that are most susceptible to earthquake induced landslides are areas with steep slopes in poorly cemented or highly fractured bedrock, areas underlain by loose, weak soils, and areas on or adjacent to existing landslide deposits.

A review of the San Bernardino County General Plan: Geologic Hazard Overlays, Map FH31C, this property is not located within a mapped zone of landsliding and adjacent areas are situated on relatively flat topography. Based on the above, the general landslide susceptibility is considered to be negligible.

Lateral Spreading

Seismically induced lateral spreading involves primarily movement of earth materials due to earth shaking. Lateral spreading is demonstrated by near-vertical cracks with predominantly horizontal movement of the soil mass involved. The topography in the vicinity of the subject site is relatively flat. Based on the above and absence of liquefaction, the potential for lateral spreading at the subject site is considered very low.

DISCUSSIONS AND CONCLUSIONS

General

Based on our field exploration, laboratory testing and engineering analysis, it is our opinion that the proposed structure and proposed grading will be safe against hazard from landslide, settlement, or slippage and the proposed construction will have no adverse effect on the geologic stability of the adjacent properties provided our recommendations presented in this report are followed.

Conclusions

Based on our findings and analyses, the subject site is likely to be subjected to moderate to severe ground shaking due to the proximity of known active and potentially active faults. This may reasonably be expected during the life of the structure and should be designed accordingly.

The primary conditions affecting the proposed project site development are as follows:

- Potential for caving during excavation.
- The site is underlain by alluvium composed of gravels, cobbles, and boulders in a sandy matrix. As such, oversized materials are anticipated to be encountered during grading operations.

The engineering evaluation performed concerning site preparation and the recommendations presented are based on information provided to us and obtained by us during our office and fieldwork. This report is prepared for the development of 103 single family homes with associated streets, driveways, parking, and a central common open park space. In the event that any significant changes are made to the proposed development, the conclusions and recommendations contained in this report shall not be considered valid unless the changes are reviewed, and the recommendations of this report are verified or modified in writing by TGR.

RECOMMENDATIONS

Seismic Design Parameters

When reviewing the 2019 California Building Code the following data should be incorporated into the design.

Parameter	Value
Latitude (degree)	34.0638
Longitude (degree)	-117.1400
Site Class	D – Stiff Soil
Site Coefficient, F_a	1.0
Site Coefficient, F_v	N/A
Mapped Spectral Acceleration at 0.2-sec Period, S_s	1.914 g
Mapped Spectral Acceleration at 1.0-sec Period, S_1	0.789 g
Spectral Acceleration at 0.2-sec Period Adjusted for Site Class, S_{MS}	2.914 g
Spectral Acceleration at 1.0-sec Period Adjusted for Site Class, S_{M1}	N/A
Design Spectral Acceleration at 0.2-sec Period, S_{DS}	1.276 g
Design Spectral Acceleration at 1.0-sec Period, S_{D1}	N/A

Site Specific Response Spectra

The USGS Unified Hazard tool, the USGS RTGM Calculator and the USGS App for Deterministic Spectra Acceleration were utilized to develop site specific ground motion spectra. The analysis was performed utilizing the following attenuation relationships that are part of NGA as required by 2019 CBC code requirements.

- Campbell & Bozorgnia (2014)
- Boore, Stewart, Seyhan & Atkinson (2014)
- Chiou & Youngs (2014)
- Abrahamson, Silva & Kamal (2014)

The results of the Site Specific Response Spectra are incorporated in Table 1 and on Figure 1 in Appendix D. The results include deterministic spectra at 5% damping, maximum rotated component at 0.84 fractile and the probabilistic spectra, maximum rotated component at 5% damping for a return period of 2475 year and subsequently multiplied by risk coefficient to obtain the MCER probabilistic spectral acceleration. The Vs30 utilized was 260 m/s.

The probabilistic response spectrum was determined using the OSHPD generated seismic values and raw output generated from the U.S. Geological Survey Unified Hazard Tool. The spectral response acceleration data generated from the U.S. Geological Survey Unified Hazard Tool was entered into the U.S. Geological Survey Risk-Targeted Ground Motion Calculator tool for each time period. The data is presented on Table 2 in Appendix D.

The deterministic response spectrum was determined using the greatest Deaggregation Contributor from the U.S. Geological Survey Unified Hazard Tool. The largest contributing fault parameters were entered into the Pacific Earthquake Engineering Research Center NGAW2 tool with a user defined sigma + 5% damping. For the deterministic analysis for the subject site, the fault utilized was the San Andreas (San Bernardino S) fault, with a characteristic magnitude M of 7.47 and a fault distance R of 5.81 km. The data is presented on Table 3 in Appendix D.

The above generated spectral accelerations were compared against the minimum code requirements in ASCE7-16 (Chapters 11 and 21) resulting in the final design response spectra which is presented in Table 1 and on Figure 1 in Appendix D.

Based on Table 1 and Figure 1, the recommended Site Specific S_{DS} and S_{D1} are as follows:

$S_{DS} = 1.211$
$S_{D1} = 1.409$

Mapped values may be used in lieu of site-specific values to design structures on Site Class D sites with an S1 greater than or equal to 0.2, provided the value of the seismic response coefficient Cs is determined by Eq. (12.8-2) for values of T ≤ 1.5Ts and taken as equal to 1.5 times the value computed in accordance with either Eq. (12.8-3) for TL ≥ T > 1.5Ts or Eq. (12.8-4) for T > TL.

The structural consultant should review the above parameters and the 2019 California Building Code to evaluate the seismic design.

Conformance to the criteria presented in the above table for seismic design does not constitute any type of guarantee or assurance that significant structural damage or ground failure will not occur during a large earthquake event. The intent of the code is “life safety” and not to completely prevent damage of the structure, since such design may be economically prohibitive.

Foundation Design Recommendations

The proposed residential structures may be supported on continuous and/or spread footings. Bearing capacity recommendations for shallow foundations are presented below. These recommendations assume that the footings will be supported on a minimum of two (2) feet of engineered fill.

For foundations supported on two (2) feet of engineered fill with minimum ninety (90) percent relative compaction at near optimum moisture content, an allowable bearing pressure of 2,500 pounds per square foot may be used in design.

The allowable bearing pressure for shallow foundations supported on minimum ninety (90) percent compacted fill shall be equal to 2,000 pounds per square foot. The recommended minimum footing depth is twelve (12) inches for single story structures and eighteen (18) inches for 2-story structures.

The minimum recommended continuous footing width is fifteen (15) inches for single story structures, eighteen (18) inches for 2-story structures and twenty-four (24) inches for pad footings. A minimum reinforcement of two (2) No. 4 steel bar top and two (2) No. 4 steel bar bottom is required for continuous footings from a geotechnical viewpoint. Foundation design details such as concrete strength, reinforcements, etc should be established by the Structural Engineer.

A one-third (1/3) increase on the aforementioned bearing pressure may be used in design for short-term wind or seismic loads.

The total and differential static settlement is anticipated to be 1 inch and 0.5 inches over 30 feet or less.

Resistance to lateral loads including wind and seismic forces may be provided by frictional resistance between the bottom of concrete and the underlying fill soils and by passive pressure against the sides of the foundations. A coefficient of friction of 0.43 may be used between concrete foundation and underlying soil. The recommended passive pressure of the engineered fill may be taken as an equivalent fluid pressure of 300 pounds per cubic foot (3,000 psf max).

Footings located near property lines where the lateral removal cannot be achieved shall be designed for a reduced bearing capacity of 1,500 pounds per square foot and the passive resistance shall be ignored.

Slab-On-Grade

Slab-on-grade should be a minimum of five (5) inches thick and reinforced with a minimum of No. 4 reinforcing bar on 18-inch centers in two horizontally perpendicular directions. Reinforcing should be properly supported to ensure placement near the vertical midpoint of the slab. "Hooking" of the reinforcement is not considered an acceptable method of positioning the steel. The slab should not be structurally connected to the buildings.

Subgrade material for the slab-on-grade should be compacted to a minimum of ninety (90) percent of the maximum laboratory dry density to a minimum depth of two (2) feet. Prior to placement of concrete, the subgrade soils should be moistened to near optimum moisture content and verified by our field representative.

The actual thickness and reinforcement of the slab shall be designed by the structural engineer per the 2019 California Building Code.

For moisture sensitive flooring, the floor slab should be underlain by an impermeable polyethylene membrane (Stego Wrap, Moistop Plus, or any equivalent meeting the requirements of ASTM D1745) as a capillary break. The membrane shall be a minimum 10-mil thick and overlain and underlain by a minimum of 2-inch thick layer of moistened (not saturated) sand to both protect the membrane and provide proper concrete curing. The polyethylene membrane joints should be lapped not less than 6 inches.

Flatwork

Flatwork should be a minimum of four (4) inches thick should be reinforced with a minimum of No. 3 reinforcing bar on 24-inch centers in two horizontally perpendicular directions. Reinforcing should be properly supported to ensure placement near the vertical midpoint of the slab. "Hooking" of the reinforcement is not considered an acceptable method of positioning the steel. The subgrade material should be compacted to a minimum of ninety (90) percent of the maximum laboratory dry density (ASTM D1557) to a minimum depth of one (1) foot. Prior to placement of concrete, the subgrade soils should be moistened to near percent of optimum moisture content and verified by our field representative. The actual thickness and reinforcement of the slab shall be designed by the structural engineer and should include the anticipated loading condition.

Retaining Wall Recommendations

The following soil parameters may be used for the design of the retaining wall with level backfill and a maximum height of six (6) feet:

Conditions	Parameters
Active (Level)	35 psf/ft
Passive	300 (maximum 3,000 psf)
Friction Coefficient	0.43

- Unrestrained retaining wall, such as a cantilever wall, the active earth pressure shall be used.
- Any import backfill shall be granular non-expansive select fill with a minimum sand equivalent of 30 The import fill should be tested and approved by TGR prior to backfill.
- An allowable coefficient of friction between properly compacted on-site fill soil and concrete of 0.43 may be used with the dead-load forces.
- Passive pressure and frictional resistance could be combined in determining the total lateral resistance. However, one of them shall be reduced by 50 percent.
- The passive pressure in the upper 6 inches of soil not confined by slabs or pavement should be neglected.

Retaining structures should be provided with a drainage system to prevent buildup of hydrostatic pressure behind the walls. Provisions should be made to collect and dispose of excess water away from the wall. Wall drainage may be provided by a perforated pipe encased in gravel or crushed rock and enclosed by geo-synthetic filter fabric. We do not recommend omitting the drains behind walls.

In addition to the above lateral forces due to retained earth, surcharge due to improvements, such as an adjacent structure, should be considered in the design of the retaining wall. A minimum vertical surcharge load of 300 psf should be used in design of walls due to adjacent traffic unless the traffic is kept at least 6 feet from the walls. Loads applied within a 1:1 projection from any surcharging structure on the stem of the wall shall be considered as lateral surcharge.

For uniform lateral surcharge conditions applied to free-to-deflect walls and restrained walls, we recommend utilizing a minimum horizontal load equal to 33 percent and 50 percent of the vertical load, respectively, and should be applied uniformly over the entire height of the wall. This horizontal load should be applied below the 1:1 projection plane. To minimize the surcharge load from an adjacent footing, deepened footings may be considered.

Retaining wall footings should have a minimum embedment of twenty-four (24) inches below the lowest adjacent grade. The retaining walls footings shall be supported on a minimum two (2) feet of compacted engineered fill compacted to a minimum ninety (90) percent relative compaction as per ASTM D1557.

Shrinkage/Subsidence

Removal and recompaction of the near surface soils is estimated to result in shrinkage ranging from 5 to 10 percent. Based on our previous experience with similar projects, additional volume loss can be anticipated due to the presence of oversized materials in the near surface soils. Minor ground subsidence is expected to occur in the soils below the zone of removal, due to settlement and machinery working. The subsidence is estimated to be between one and two tenths of a foot.

Site Development Recommendations

General

During earthwork construction, all site preparation and the general procedures of the contractor should be observed, and the fill selectively tested by a representative of TGR. If unusual or unexpected conditions are exposed in the field, they should be reviewed by this office and if warranted, modified and/or additional recommendations will be offered. During demolition of the existing buildings, large concrete slab and associated site work, voids created from removal of buried elements (footings, pipelines, septic pits, etc.) shall be backfilled with engineered fill to a minimum ninety (90) percent relative compaction per ASTM D1557 under the observation of TGR.

Grading

All grading should conform to the guidelines presented in the California Building Code (2019 edition), except where specifically superseded in the text of this report. Prior to grading, TGR's representative should be present at the pre-construction meeting to provide grading guidelines, if needed, and review any earthwork. Oversize particles may be encountered during grading. All particles greater than 4-inches shall be removed and disposed offsite.

Oversized materials may be crushed to 1" minus and mixed with onsite soil in a controlled manner as recommended by the geotechnical consultant and used as engineered fill.

The footings and slab-on-grade shall be supported on a minimum two (2) feet of engineered fill. A minimum one (1) foot of engineered fill is recommended under flatwork and pavement. Site soils may be reused as engineered fill provided, they are free of oversized particles and the recommendations presented in this report are implemented. Exposed bottoms should be scarified a minimum of 6-inches, moisture conditioned to near optimum moisture and compacted to a minimum ninety (90) percent relative compaction. Subsequently, site fill soils should be re-compacted to a minimum of ninety (90) percent relative compaction at near optimum moisture content. The lateral extent of removals beyond the building/structure/footing limits should be equal to at least 5 feet.

The depth of over-excavation should be reviewed by the Geotechnical Consultant during the actual construction. Any subsurface obstruction buried structural elements, and unsuitable material encountered during grading, should be immediately brought to the attention of the Geotechnical Consultant for proper exposure, removal and processing, as recommended.

Fill Placement

Prior to any fill placement TGR should observe the exposed surface soils. The site soils may be re-used as engineered fill provided, they are free of organic content and particle size greater than 4-inches. All particles greater than 4-inches shall be removed and disposed offsite. Fill shall be moisture conditioned to near optimum moisture and compacted to a minimum relative compaction of ninety (90) percent in accordance with ASTM D1557. Any import soils shall be non-expansive and approved by TGR Geotechnical Inc.

Compaction

Prior to fill placement, the exposed surface should be scarified to a minimum depth of six (6) inches, fill placed in eight (8) inch loose lifts moisture conditioned to near optimum moisture and compacted to a minimum relative compaction of ninety (90) percent in accordance with ASTM D1557.

Trenching

All excavations should conform to CAL-OSHA and local safety codes.

Temporary Excavation and Shoring

Due the dry, granular nature of onsite soils, all cuts shall be properly shored or sloped back to at least 1.H:1V (Horizontal: Vertical) or flatter. Some sloughing may be anticipated due to the granular nature of site soils. The exposed slope face should be kept moist (but not saturated) during construction to reduce local sloughing. No surcharge loads should be permitted within a horizontal distance equal to the height of cut from the toe of excavation unless the cut is properly shored. Excavations that extend below an imaginary plane inclined at 45 degrees below the edge of any nearby adjacent existing site facilities should be properly shored to maintain foundation support at the adjacent structures.

Utility Trench Backfill

All utility trench backfills in structural areas and beneath hardscape features should be brought to near optimum moisture content and compacted to a minimum relative compaction of ninety (90) percent of the laboratory standard. Flooding/jetting is not recommended.

Sand backfill, (unless trench excavation material), should not be allowed in parallel exterior trenches adjacent to and within an area extending below a 1:1 plane projected from the outside bottom edge of the footing. All trench excavations should minimally conform to CAL-OSHA and local safety codes. Soils generated from utility trench excavations may be used provided it is moisture conditioned and compacted to ninety (90) percent minimum relative compaction.

Drainage

Positive site drainage should be maintained at all times. Drainage should not flow uncontrolled down any descending slope or retaining wall. Water should be directed away from foundations and not allowed to pond and/or seep into the ground. Pad drainage should be directed toward the street/parking or other approved area. Roof gutters and down spouts should be utilized to control roof drainage. Down spouts should outlet a minimum of 5 feet from the proposed structure or into an approved subsurface drainage system. We would recommend that any proposed open-bottom planters adjacent to proposed structures be eliminated for a minimum distance of 10 feet. As an alternative, closed-bottom type planters could be utilized. An outlet placed in the bottom of the planter could be installed to direct drainage away from structures or any exterior concrete flatwork.

Preliminary Pavement Design

The Caltrans method of design was utilized to develop the following asphalt pavement section. The section was developed based on a tested “R-Value” for compacted site subgrade soils of 73.

Traffic indices of 4.5, 5 and 6 were assumed for use in the evaluation of the asphalt pavement sections. The traffic indices are subject to approval by controlling authorities and shall be approved by the project civil engineer.

ASPHALT PAVEMENT SECTION			
Traffic Index	Asphalt (Inch)	Aggregate Base (Inch)	Total (Inch)
4.5	3.0	4.0	7.0
5.0	3.0	6.0	9.0
6.0	4.0	6.0	10.0

Aggregate base material for Asphalt Pavement should consist of CAB/CMB complying with the specifications in Section 200-2.2/200-2.4 of the current "Standard Specifications for Public Works Construction" and should be compacted to at least ninety-five (95) percent of the maximum dry density (ASTM D1557). The surface of the base should exhibit a firm and unyielding condition just prior to the placement of asphalt concrete paving. The asphalt concrete shall be compacted to a minimum of ninety-five (95) percent relative compaction.

The pavement subgrade should be constructed in accordance with the recommendations presented in the grading section of this report.

The R-value and the associated pavement section should be confirmed at the completion of site grading.

Geotechnical Review of Plans

All grading and foundation plans should be reviewed and accepted by the geotechnical consultant prior to construction. If significant time elapses since preparation of this report, the geotechnical consultant should verify the current site conditions, and provide any additional recommendations (if necessary) prior to construction.

Geotechnical Observation/Testing During Construction

Per sections 1705.6 and table 1705.6 of the 2019 California Building Code, periodic special inspection shall be performed to:

- Verify materials below shallow foundations are adequate to achieve the design bearing capacity;
- Verify excavations are extended to the proper depth and have reached proper material;
- Verify classification and test compacted materials; and
- Prior to placement of compacted fill, inspect subgrade and verify that the site has been prepared properly.

Per sections 1705.6 and table 1705.6 of the 2019 California Building Code, continuous special inspection shall be performed to:

- Verify use of proper materials, densities and lift thickness during placement and compaction of compacted fill.

The geotechnical consultant should also perform observation and/or testing at the following stages:

- During any grading and fill placement;
- After foundation excavation and prior to placing concrete;
- Prior to placing slab and flatwork concrete;
- During placement of aggregate base and asphalt or Portland cement concrete; and
- When any unusual soil conditions are encountered during any construction operation subsequent to issuance of this report.

Limitations

This report was prepared for a specific client and a specific project, based on the client's needs, directions and requirements at the time.

This report was necessarily based upon data obtained from a limited number of observances, site visits, soil and/or other samples, tests, analyses, histories of occurrences, spaced subsurface exploration and limited information on historical events and observations. Such information is necessarily incomplete. Variations can be experienced within small distances and under various climatic conditions. Changes in subsurface conditions can and do occur over time.

This report is not authorized for use by and is not to be relied upon by any party except the client with whom TGR contracted for the work. Use or reliance on this report by any other party is that party's sole risk. Unauthorized use of or reliance on this report constitutes an agreement to defend and indemnify TGR from and against any liability which may arise as a result of such use or reliance, regardless of any fault, negligence, or strict liability of TGR.

TGR
Geotechnical
Environmental
Hydrogeology
Material Testing
Construction Inspection

BORING LOCATION MAP
NW CORNER OF E. COLTON AVENUE AND N. WABASH AVENUE
REDLANDS, CALIFORNIA

PROJECT NO. 22-7455

PLATE 1

TGR
Geotechnical
Environmental
Hydrogeology
Material Testing
Construction Inspection

SITE LOCATION MAP
NW CORNER OF E. COLTON AVENUE AND N. WABASH AVENUE
REDLANDS, CALIFORNIA

PROJECT NO. 22-7455

FIGURE 1

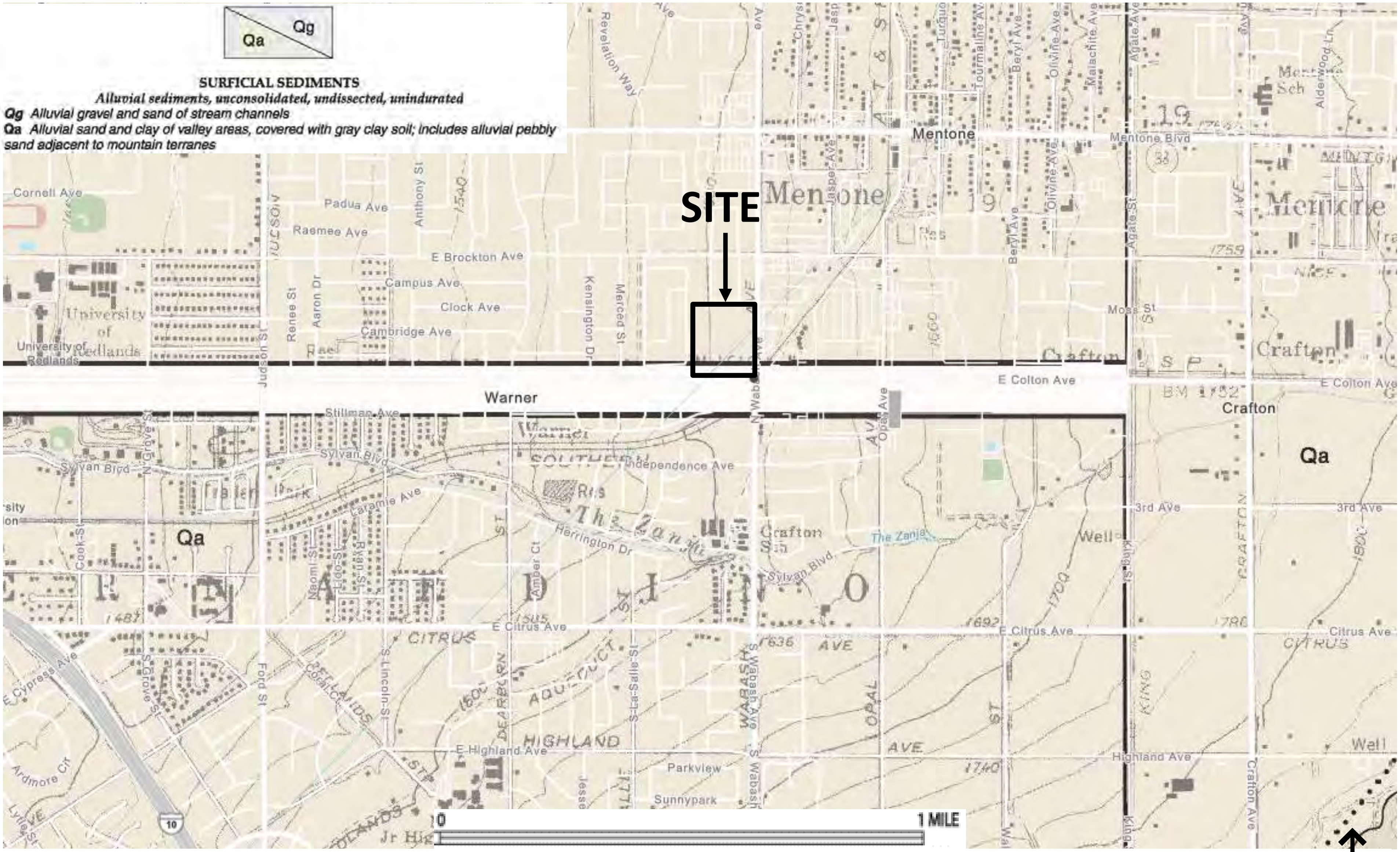

Modified From: Dibblee, T.W., and Minch, J.A., 2004, Geologic map of the Harrison Mountain/north 1/2 of Redlands quadrangles, San Bernardino and Riverside County, California: Dibblee Geological Foundation, DF-126, scale 1:24,000.

TGR

Geotechnical
Environmental
Hydrogeology
Material Testing
Construction Inspection

REGIONAL GEOLOGY MAP
NW CORNER OF E. COLTON AVENUE AND N. WABASH AVENUE
REDLANDS, CALIFORNIA

PROJECT NO. 22-7455

FIGURE 2

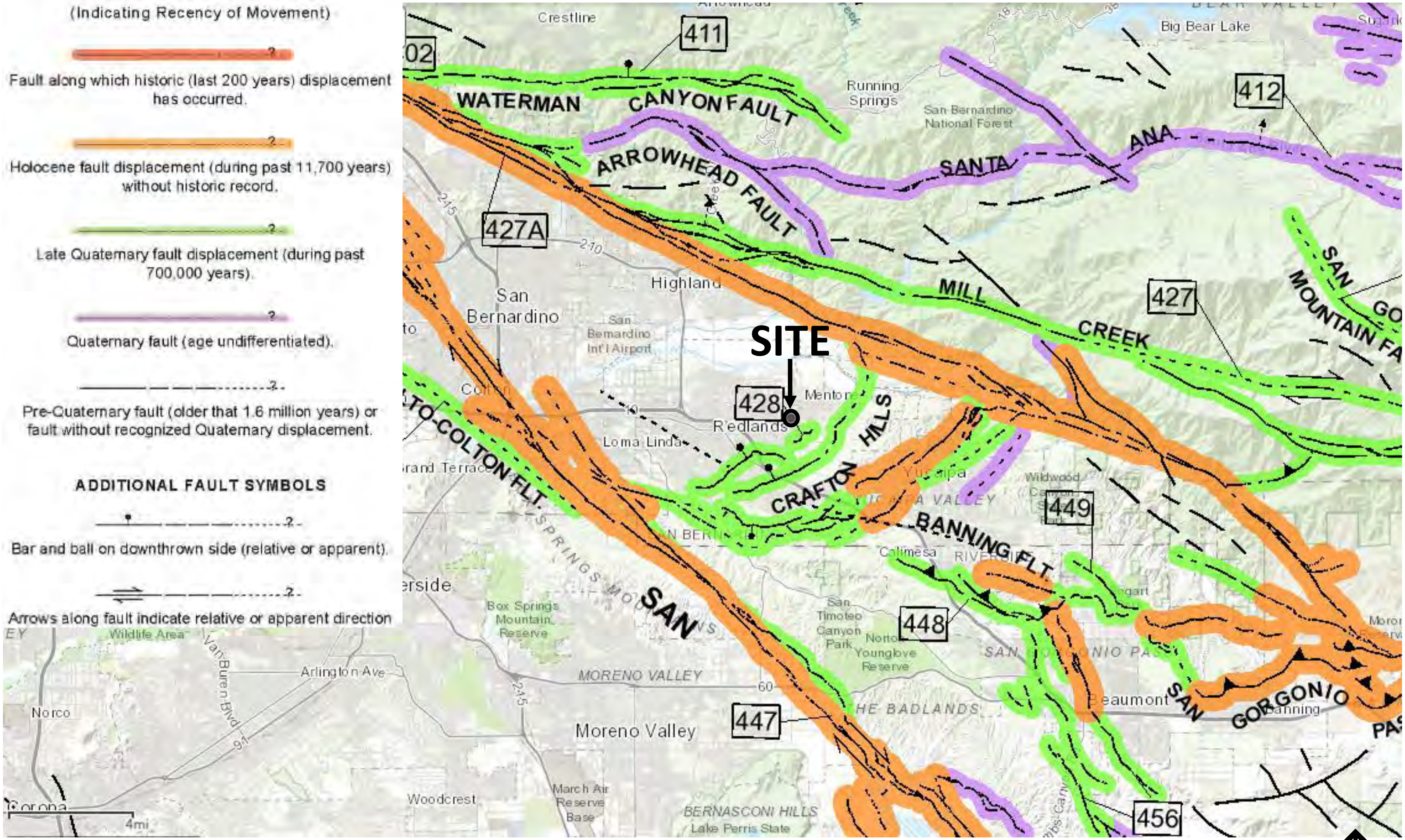

Modified From: Jennings, C. W., 2010, Fault Activity Map of California and Adjacent Areas, California Division of Mines and Geology, Geologic Data Map Series, No. 6, Scale 1:750,000.

TGR Geotechnical Environmental Hydrogeology Material Testing Construction Inspection

REGIONAL FAULT MAP
NW CORNER OF E. COLTON AVENUE AND N. WABASH AVENUE
REDLANDS, CALIFORNIA

PROJECT NO. 22-7455

FIGURE 3

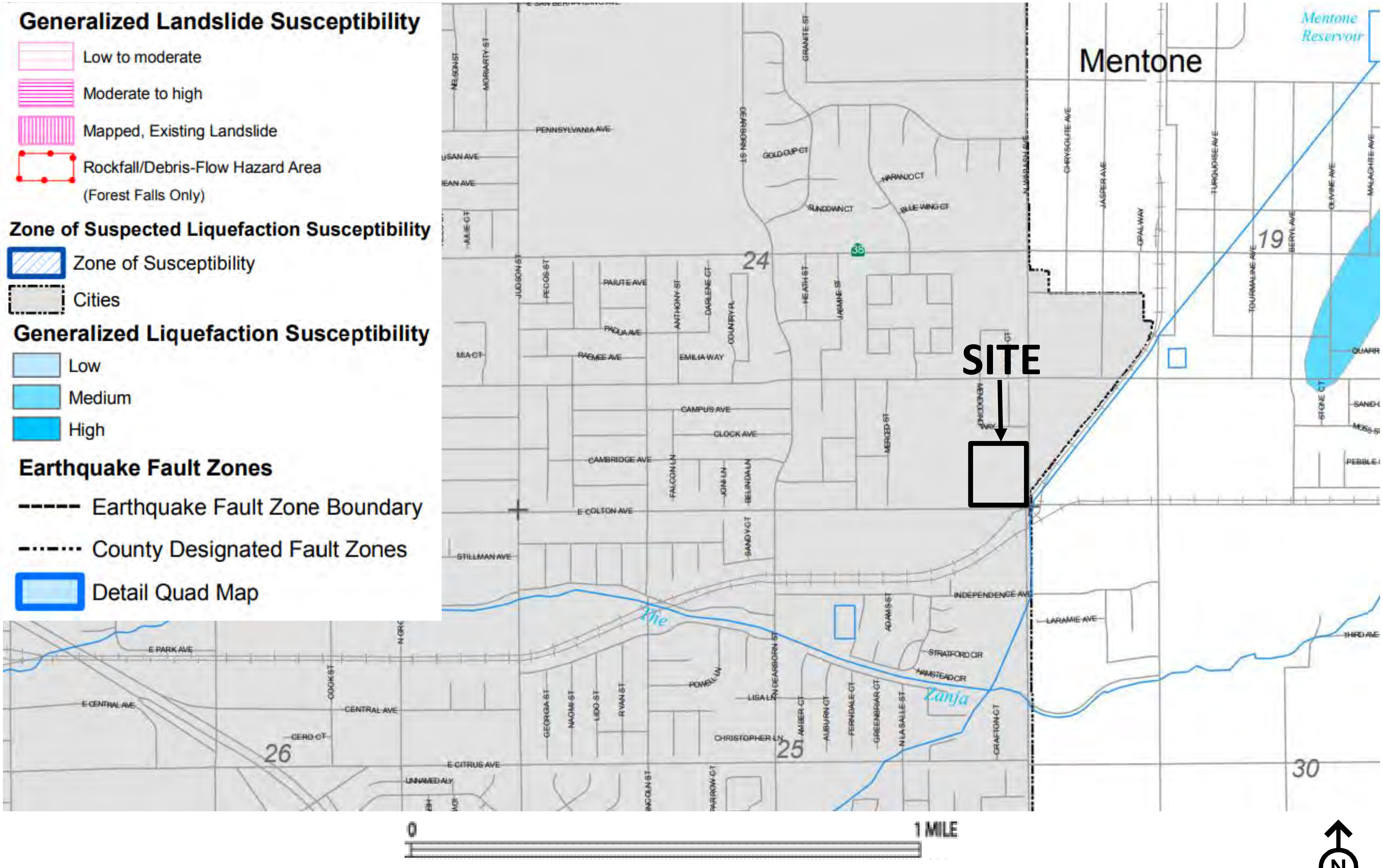

Modified From: County of Sand Bernardino, Land Use Services, Geologic Hazard Maps Overlay, Map FH31C.

TGR
Geotechnical
Environmental
Hydrogeology
Material Testing
Construction Inspection

GEOLOGIC HAZARDS MAP
NW CORNER OF E. COLTON AVENUE AND N. WABASH AVENUE
REDLANDS, CALIFORNIA

PROJECT NO. 22-7455

FIGURE 4

Table 1: Percolation Test Worksheet

Test Hole	Total Depth (in)	Initial Depth (in)	Final Depth (in)	∆Water Level (in)	Initial Time (min)	Final Time (min)	∆ Time (min)	Initial Height of Water (in)	Final Height of Water (in)	Average Height of Water (in)	Gravel Factor	Infiltration Rate (in/hr)
P-1/B-5	108	70.20	96.96	26.76	0.0	5.0	5.0	37.80	11.04	24.42	0.54	13.13
	108	62.76	89.88	27.12	0.0	5.0	5.0	45.24	18.12	31.68	0.54	10.44
	108	63.60	91.44	27.84	0.0	5.0	5.0	44.40	16.56	30.48	0.54	11.11
	108	62.64	89.76	27.12	0.0	5.0	5.0	45.36	18.24	31.80	0.54	10.40
	108	64.08	91.32	27.24	0.0	5.0	5.0	43.92	16.68	30.30	0.54	10.93
	108	63.00	90.00	27.00	0.0	5.0	5.0	45.00	18.00	31.50	0.54	10.45
P-2	108	64.44	92.52	28.08	0.0	5.0	5.0	43.56	15.48	29.52	0.54	11.55
	108	64.56	89.88	25.32	0.0	5.0	5.0	43.44	18.12	30.78	0.54	10.01
	108	63.84	85.20	21.36	0.0	5.0	5.0	44.16	22.80	33.48	0.54	7.80
	108	62.76	84.36	21.6	0.0	5.0	5.0	45.24	23.64	34.44	0.54	7.68
	108	64.20	84.96	20.76	0.0	5.0	5.0	43.80	23.04	33.42	0.54	7.60
	108	63.60	85.44	21.84	0.0	5.0	5.0	44.40	22.56	33.48	0.54	7.98

$$I_t = \frac{\Delta H(60r)}{\Delta t(r + 2H_{avg})}$$

ΔH = Change in height

Δt = Time interval

r = Radius

I_t Infiltration Rate

H_{ave} Average Head Height over the time interval

APPENDIX A
REFERENCES

APPENDIX A

References

California Department of Conservation – California Geological Survey, 2018, Earthquake Fault Zones, A Guide for Government Agencies, Property Owners/Developers and Geoscience Practitioners for Assessing Fault Rupture Hazards in California, Special Publication 42

California Department of Conservation – Division of Mines and Geology, 2008, Guidelines for Evaluating and Mitigating Seismic Hazards in California, CDMG Special Publication 117A.

California Department of Conservation – Division of Mines and Geology, 1998, Maps of Known Active Fault Near – Source Zones in California and Adjacent Portions of Nevada.

County of San Bernardino, 2013, Technical Guidance Document for Water Quality Management Plans, The County of San Bernardino Areawide Stormwater Program, Effective Date: September 19, 2013.

County of San Bernardino, 2011, Technical Guidance Document Appendices, Appendix VII, Infiltration Rate Evaluation Protocol and Factor of Safety Recommendation, dated May 19, 2011.

County of San Bernardino, 2010, San Bernardino County Land Use Plan, General Plan, Geologic Hazard Overlays, San Bernardino County, California, FH31 Redlands.

Dibblee, T.W., and Minch, J.A., 2004, Geologic map of the Harrison Mountain/north 1/2 of Redlands quadrangles, San Bernardino and Riverside County, California: Dibblee Geological Foundation, DF-126, scale 1:24,000.

International Code Council (ICC), California Building Code, 2019 Edition.

Jennings, C. W., 2010, Fault Activity Map of California and Adjacent Areas, California Division of Mines and Geology, Geologic Data Map Series, No. 6, Scale 1:750,000.

APPENDIX B
LOG OF BORINGS

THE FOLLOWING DESCRIBES THE TERMS AND SYMBOLS USED ON THE LOG OF BORINGS TO SUMMARIZE THE RESULTS OBTAINED IN THE FIELD INVESTIGATION AND SUBSEQUENT LABORATORY TESTING

DENSITY AND CONSISTENCY

The consistency of fine grained soils and the density of coarse grained soils are described on the basis of the Standard Penetration Test as follows:

COARSE GRAINED SOILS		ESTIMATED UNCONFINED COMPRESSIVE STRENGTH (Tsf)	FINE GRAINED SOILS	
Very Loose	< 4	< 0.25	Very Soft	< 2
Loose	4 – 10	0.35 – 0.50	Soft	2 – 4
Medium	10 – 30	0.50 – 1.0	Firm (Medium)	4 – 8
Dense	30 – 50	1.0 – 2.0	Stiff	8 – 15
Very Dense	> 50	2.0 – 4.0	Very Stiff	15 – 30
		> 4.0	Hard	> 30

PARTICLE SIZE DEFINITION (As per ASTM D2487 and D422)

Boulder	⇒ Larger than 12 inches	Coarse Sands	⇒ No. 10 to No. 4 sieve
Cobbles	⇒ 3 to 12 inches	Medium Sands	⇒ No. 40 to No. 10 sieve
Coarse Gravel	⇒ 3/4 to 3 inches	Fine Sands	⇒ No. 200 to 40 sieve
Fine Gravel	⇒ No. 4 to 3/4 inches	Silt	⇒ 5µm to No. 200 sieve
		Clay	⇒ Smaller than 5µm

SOIL CLASSIFICATION

Soils and bedrock are classified and described based on their engineering properties and characteristics using ASTM D2487 and D2488.

Percentage description of minor components:

Trace	1 – 10%	Some	20 – 35%
Little	10 – 20%	And or y	25 – 50%

Stratified soils description:

Parting	0 to 1/16 inch thick	Layer	½ to 12 inches thick
Seam	1/16 to ½ inch thick	Stratum	> 12 inches thick

TGR
Geotechnical
Environmental
Hydrogeology
Material Testing
Construction Inspection

LOG OF BORING
EXPLANATION

SOIL CLASSIFICATION CHART

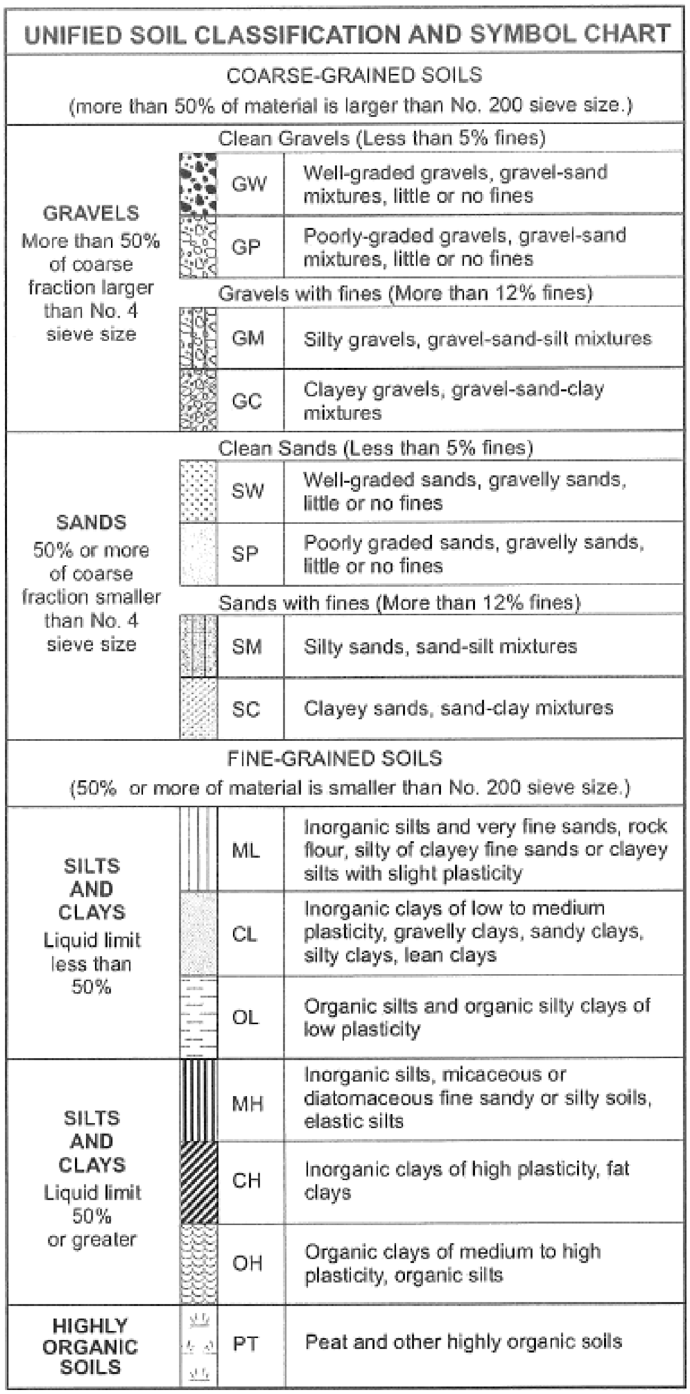

UNIFIED SOIL CLASSIFICATION AND SYMBOL CHART

COARSE-GRAINED SOILS (more than 50% of material is larger than No. 200 sieve size.)		
	Clean Gravels (Less than 5% fines)	
GRAVELS More than 50% of coarse fraction larger than No. 4 sieve size	GW	Well-graded gravels, gravel-sand mixtures, little or no fines
	GP	Poorly-graded gravels, gravel-sand mixtures, little or no fines
	Gravels with fines (More than 12% fines)	
	GM	Silty gravels, gravel-sand-silt mixtures
	GC	Clayey gravels, gravel-sand-clay mixtures
	Clean Sands (Less than 5% fines)	
SANDS 50% or more of coarse fraction smaller than No. 4 sieve size	SW	Well-graded sands, gravelly sands, little or no fines
	SP	Poorly graded sands, gravelly sands, little or no fines
	Sands with fines (More than 12% fines)	
	SM	Silty sands, sand-silt mixtures
	SC	Clayey sands, sand-clay mixtures
FINE-GRAINED SOILS (50% or more of material is smaller than No. 200 sieve size.)		
SILTS AND CLAYS Liquid limit less than 50%	ML	Inorganic silts and very fine sands, rock flour, silty of clayey fine sands or clayey silts with slight plasticity
	CL	Inorganic clays of low to medium plasticity, gravelly clays, sandy clays, silty clays, lean clays
	OL	Organic silts and organic silty clays of low plasticity
SILTS AND CLAYS Liquid limit 50% or greater	MH	Inorganic silts, micaceous or diatomaceous fine sandy or silty soils, elastic silts
	CH	Inorganic clays of high plasticity, fat clays
	OH	Organic clays of medium to high plasticity, organic silts
HIGHLY ORGANIC SOILS	PT	Peat and other highly organic soils

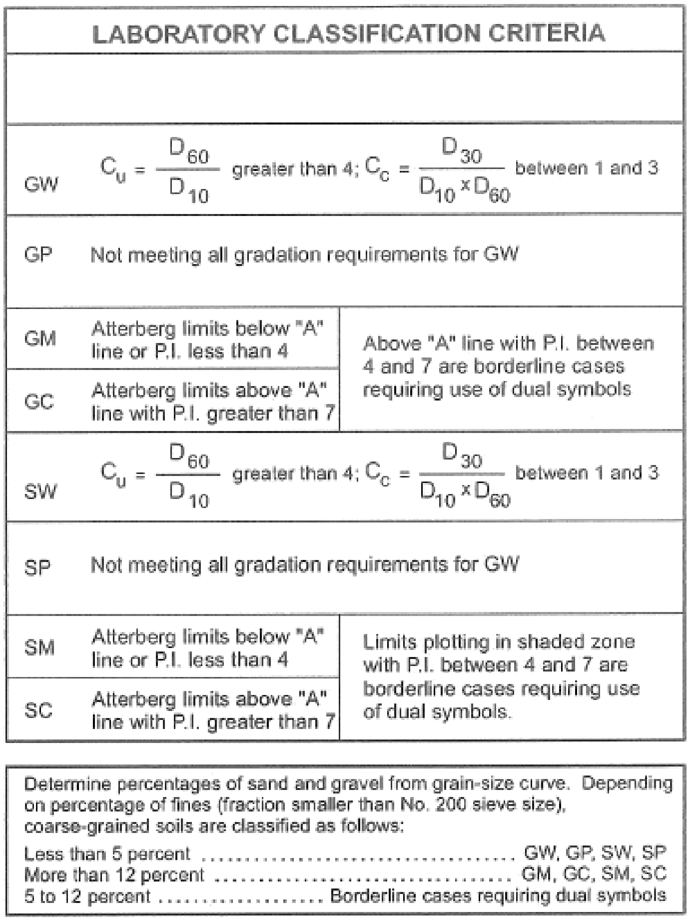

LABORATORY CLASSIFICATION CRITERIA

GW	$C_u = \frac{D_{60}}{D_{10}}$ greater than 4; $C_c = \frac{D_{30}}{D_{10} \times D_{60}}$ between 1 and 3	
GP	Not meeting all gradation requirements for GW	
GM	Atterberg limits below "A" line or P.I. less than 4	Above "A" line with P.I. between 4 and 7 are borderline cases requiring use of dual symbols
GC	Atterberg limits above "A" line with P.I. greater than 7	
SW	$C_u = \frac{D_{60}}{D_{10}}$ greater than 4; $C_c = \frac{D_{30}}{D_{10} \times D_{60}}$ between 1 and 3	
SP	Not meeting all gradation requirements for GW	
SM	Atterberg limits below "A" line or P.I. less than 4	Limits plotting in shaded zone with P.I. between 4 and 7 are borderline cases requiring use of dual symbols.
SC	Atterberg limits above "A" line with P.I. greater than 7	

Determine percentages of sand and gravel from grain-size curve. Depending on percentage of fines (fraction smaller than No. 200 sieve size), coarse-grained soils are classified as follows:

Less than 5 percent .... GW, GP, SW, SP
More than 12 percent .... GM, GC, SM, SC
5 to 12 percent .... Borderline cases requiring dual symbols

PLASTICITY CHART

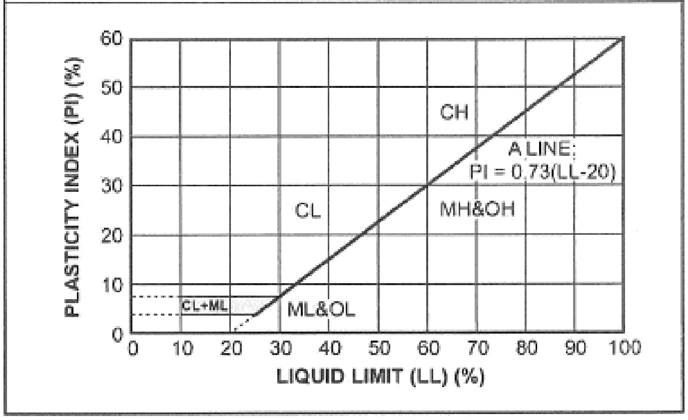

PARTICLE SIZE LIMITS

COBBLES	GRAVEL		SAND			SILT OR CLAY
	coarse	fine	coarse	medium	fine	

3" ¾" NO. 4 NO. 10 NO. 40 NO. 200

TGR Geotechnical Environmental Hydrogeology Material Testing Construction Inspection

LOG OF BORING EXPLANATION

LOG OF EXPLORATORY BORING B-1

Sheet **1** of **1**

Project Number: **22-7455**
Project Name: **Colton Ave. and Wabash Ave., Redlands**
Date Drilled: **3/15/22 - 3/15/22**
Ground Elev: **1604**
Logged By: **RA**
Project Engineer: **SG**
Drill Type: **Hollow Stem**
Drive Wt & Drop: **140lbs / 30in**

■ Shelby Tube ☒ Standard Split Spoon ◉ No recovery
⧗ Modified California ▼ Water Table ATD

Elevation (ft)	Depth (ft)	Graphic Log	FIELD RESULTS					SUMMARY OF SUBSURFACE CONDITIONS	LAB RESULTS		
			Bulk Sample	Drive Sample	SPT blows/ft (or equivalent N)	Pocket Pen (tsf)	USCS		Moisture Content (%)	Dry Density, (pcf)	Other Tests
		▨						Surface is grass and vegetation.			
		▥						NATIVE: Silty SAND- light brown, dry, medium dense, very fine to fine grained sand.			
1600		▥									
	5	▥									
		▨		⧗	39		SP	SAND- grey and white, dry, dense, fine to coarse grained, fine to coarse grained gravel, cobbles.	1	117	Consol
								Total Depth: 8 feet due to refusal in cobbles. No groundwater encountered during drilling. No caving observed. Boring backfilled with soil cuttings upon completion. Ground elevation estimated with Google Earth.			
1595											
	10										
1590											

This Boring Log should be evaluated in conjunction with the complete geotechnical report. This Boring Log represents conditions observed at the specific location and date indicated, it is not warranted to be representative of subsurface conditions at other locations and times.

PLATE 2

TGR GEOTECHNICAL, INC.

LOG OF EXPLORATORY BORING B-2

Sheet **1** of **1**

Project Number: **22-7455**
Project Name: **Colton Ave. and Wabash Ave., Redlands**
Date Drilled: **3/15/22 - 3/15/22**
Ground Elev: **1606**
Logged By: **RA**
Project Engineer: **SG**
Drill Type: **Hollow Stem**
Drive Wt & Drop: **140lbs / 30in**

■ Shelby Tube
☒ Standard Split Spoon
◉ No recovery
⧗ Modified California
▼ Water Table ATD

Elevation (ft)	Depth (ft)	Graphic Log	FIELD RESULTS					SUMMARY OF SUBSURFACE CONDITIONS	LAB RESULTS		
			Bulk Sample	Drive Sample	SPT blows/ft (or equivalent N)	Pocket Pen (tsf)	USCS		Moisture Content (%)	Dry Density, (pcf)	Other Tests
								Surface is grass and vegetation.			
								NATIVE: Silty SAND- light brown, dry, stiff, very fine to fine grained sand, some fine to coarse grained gravel.			
1605											
											EI, Corrosion, R-Value
	5							...Same as above, some cobbles.			
					46		SM		2	109	
1600											
								Total Depth: 6.5 feet due to refusal in cobbles. No groundwater encountered during drilling. No caving observed. Boring backfilled with soil cuttings upon completion. Ground elevation estimated with Google Earth.			
	10										
1595											

This Boring Log should be evaluated in conjunction with the complete geotechnical report. This Boring Log represents conditions observed at the specific location and date indicated, it is not warranted to be representative of subsurface conditions at other locations and times.

PLATE 3

TGR GEOTECHNICAL, INC.

LOG OF EXPLORATORY BORING B-3

Sheet **1** of **1**

Project Number:	**22-7455**	Logged By:	**RA**
Project Name:	**Colton Ave. and Wabash Ave., Redlands**	Project Engineer:	**SG**
Date Drilled:	**3/15/22 - 3/15/22**	Drill Type:	**Hollow Stem**
Ground Elev:	**1611**	Drive Wt & Drop:	**140lbs / 30in**

■ Shelby Tube ☒ Standard Split Spoon ◉ No recovery ⧗ Modified California ▼ Water Table ATD

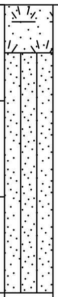

Elevation (ft)	Depth (ft)	Graphic Log	FIELD RESULTS Bulk Sample	Drive Sample	SPT blows/ft (or equivalent N)	Pocket Pen (tsf)	USCS	SUMMARY OF SUBSURFACE CONDITIONS	LAB RESULTS Moisture Content (%)	Dry Density, (pcf)	Other Tests
								Surface is grass and vegetation.			
1610								NATIVE: Silty SAND- light brown, dry, stiff, very fine to fine grained sand, some fine to coarse grained gravel.			
								Total Depth: 3 feet due to refusal in cobbles. No groundwater encountered during drilling. No caving observed. Boring backfilled with soil cuttings upon completion. Ground elevation estimated with Google Earth.			
	5										
1605											
	10										
1600											

This Boring Log should be evaluated in conjunction with the complete geotechnical report. This Boring Log represents conditions observed at the specific location and date indicated, it is not warranted to be representative of subsurface conditions at other locations and times.

PLATE 4

TGR GEOTECHNICAL, INC.

LOG OF EXPLORATORY BORING B-4

Sheet **1** of **1**

Project Number: **22-7455**
Project Name: **Colton Ave. and Wabash Ave., Redlands**
Date Drilled: **3/15/22 - 3/15/22**
Ground Elev: **1603**
Logged By: **RA**
Project Engineer: **SG**
Drill Type: **Hollow Stem**
Drive Wt & Drop: **140lbs / 30in**

■ Shelby Tube
☒ Standard Split Spoon
◉ No recovery
⧗ Modified California
▼ Water Table ATD

			FIELD RESULTS						LAB RESULTS		
Elevation (ft)	Depth (ft)	Graphic Log	Bulk Sample	Drive Sample	SPT blows/ft (or equivalent N)	Pocket Pen (tsf)	USCS	SUMMARY OF SUBSURFACE CONDITIONS	Moisture Content (%)	Dry Density, (pcf)	Other Tests
								Surface is grass and vegetation.			
								NATIVE: Silty SAND- light brown, dry, stiff, very fine to fine grained sand, some fine to coarse grained gravel.			
1600											
	5			⧗	46		SP	SAND- light brown, slightly moist, very dense, fine to coarse grained sand, fine to coarse grained gravel, cobbles.	3	117	
								Total Depth: 6.5 feet due to refusal in cobbles. No groundwater encountered during drilling. No caving observed. Boring backfilled with soil cuttings upon completion. Ground elevation estimated with Google Earth.			
1595											
	10										
1590											

This Boring Log should be evaluated in conjunction with the complete geotechnical report. This Boring Log represents conditions observed at the specific location and date indicated, it is not warranted to be representative of subsurface conditions at other locations and times.

PLATE 5

TGR GEOTECHNICAL, INC.

LOG OF EXPLORATORY BORING B-5/P-1

Sheet **1** of **1**

Project Number:	**22-7455**	Logged By:	**RA**
Project Name:	**Colton Ave. and Wabash Ave., Redlands**	Project Engineer:	**SG**
Date Drilled:	**3/15/22 - 3/15/22**	Drill Type:	**Hollow Stem**
Ground Elev:	**1607**	Drive Wt & Drop:	**140lbs / 30in**

■ Shelby Tube ☒ Standard Split Spoon ◉ No recovery

⧗ Modified California ▼ Water Table ATD

Elevation (ft)	Depth (ft)	Graphic Log	FIELD RESULTS Bulk Sample	Drive Sample	SPT blows/ft (or equivalent N)	Pocket Pen (tsf)	USCS	SUMMARY OF SUBSURFACE CONDITIONS	LAB RESULTS Moisture Content (%)	Dry Density, (pcf)	Other Tests
								Surface is grass and vegetation.			
1605								NATIVE: Silty SAND- light brown, dry, stiff, very fine to fine grained sand, some fine to coarse grained gravel.			
	5			⧗	50		SP	SAND- light brown, dry, very dense, fine grained sand, fine to coarse grained gravel, some silt.	2	113	-200= 5.7%
1600											
			☰				SP		2		-200= 10.2%
	10							Total Depth: 9 feet due to refusal in cobbles. No groundwater encountered during drilling. No caving observed. Boring utilized for percolation testing. Boring backfilled with soil cuttings upon completion. Ground elevation estimated with Google Earth.			
1595											

This Boring Log should be evaluated in conjunction with the complete geotechnical report. This Boring Log represents conditions observed at the specific location and date indicated, it is not warranted to be representative of subsurface conditions at other locations and times.

PLATE 6

TGR GEOTECHNICAL, INC.

LOG OF EXPLORATORY BORING B-6

Sheet **1** of **1**

Project Number: **22-7455**
Project Name: **Colton Ave. and Wabash Ave., Redlands**
Date Drilled: **3/15/22 - 3/15/22**
Ground Elev: **1611**
Logged By: **RA**
Project Engineer: **SG**
Drill Type: **Hollow Stem**
Drive Wt & Drop: **140lbs / 30in**

■ Shelby Tube ☒ Standard Split Spoon ◉ No recovery
⧗ Modified California ▼ Water Table ATD

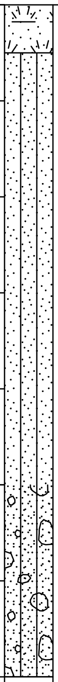

Elevation (ft)	Depth (ft)	Graphic Log	FIELD RESULTS Bulk Sample	Drive Sample	SPT blows/ft (or equivalent N)	Pocket Pen (tsf)	USCS	SUMMARY OF SUBSURFACE CONDITIONS	LAB RESULTS Moisture Content (%)	Dry Density, (pcf)	Other Tests
	0							Surface is grass and vegetation.			
								NATIVE: Silty <u>SAND</u>- light brown, dry, stiff, very fine to fine grained sand, some fine to coarse grained gravel.			
1610											
								...Same as above, cobbles.			
	5			⧗	53		SPG	Gravelly <u>SAND</u>- grey brown, dry, very dense, fine to coarse grained sand, fine to coarse grained gravel, cobbles.	2	115	Consol
1605											
								Total Depth: 7 feet due to refusal in cobbles. No groundwater encountered during drilling. No caving observed. Boring backfilled with soil cuttings upon completion. Ground elevation estimated with Google Earth.			
	10										
1600											

This Boring Log should be evaluated in conjunction with the complete geotechnical report. This Boring Log represents conditions observed at the specific location and date indicated, it is not warranted to be representative of subsurface conditions at other locations and times.

PLATE 7

TGR GEOTECHNICAL, INC.

LOG OF EXPLORATORY BORING B-7

Sheet **1** of **1**

Project Number:	**22-7455**	Logged By:	**RA**
Project Name:	**Colton Ave. and Wabash Ave., Redlands**	Project Engineer:	**SG**
Date Drilled:	**3/15/22 - 3/15/22**	Drill Type:	**Hollow Stem**
Ground Elev:	**1605**	Drive Wt & Drop:	**140lbs / 30in**

■ Shelby Tube
☒ Standard Split Spoon
◉ No recovery
⧗ Modified California
▼ Water Table ATD

Elevation (ft)	Depth (ft)	Graphic Log	FIELD RESULTS					SUMMARY OF SUBSURFACE CONDITIONS	LAB RESULTS		
			Bulk Sample	Drive Sample	SPT blows/ft (or equivalent N)	Pocket Pen (tsf)	USCS		Moisture Content (%)	Dry Density, (pcf)	Other Tests
								Surface is grass and vegetation.			
								NATIVE: Silty SAND- light brown, dry, stiff, very fine to fine grained sand, some fine to coarse grained gravel.			
1600	5			⧗	59		SM	...Same as above, cobbles.	2	103	
								Total Depth: 7 feet due to refusal in cobbles. No groundwater encountered during drilling. No caving observed. Boring backfilled with soil cuttings upon completion. Ground elevation estimated with Google Earth.			
1595	10										

This Boring Log should be evaluated in conjunction with the complete geotechnical report. This Boring Log represents conditions observed at the specific location and date indicated, it is not warranted to be representative of subsurface conditions at other locations and times.

PLATE 8

TGR GEOTECHNICAL, INC.

LOG OF EXPLORATORY BORING B-8

Sheet **1** of **1**

Project Number: **22-7455**
Project Name: **Colton Ave. and Wabash Ave., Redlands**
Date Drilled: **3/15/22 - 3/15/22**
Ground Elev: **1608**
Logged By: **RA**
Project Engineer: **SG**
Drill Type: **Hollow Stem**
Drive Wt & Drop: **140lbs / 30in**

■ Shelby Tube
☒ Standard Split Spoon
◉ No recovery
⧗ Modified California
▼ Water Table ATD

		FIELD RESULTS							LAB RESULTS		
Elevation (ft)	Depth (ft)	Graphic Log	Bulk Sample	Drive Sample	SPT blows/ft (or equivalent N)	Pocket Pen (tsf)	USCS	SUMMARY OF SUBSURFACE CONDITIONS	Moisture Content (%)	Dry Density, (pcf)	Other Tests
			▤					Surface is grass and vegetation.			
1605			▤				SM	NATIVE: Silty SAND- light brown, dry, stiff, very fine to fine grained sand, some fine to coarse grained gravel.			Max, Shear
	5			⧗	14		SP	SAND- grey brown, dry, medium dense, fine to coarse grained sand, fine to coarse grained gravel, cobbles, some silt.	2	107	Consol
1600								Total Depth: 8 feet due to refusal in cobbles. No groundwater encountered during drilling. No caving observed. Boring backfilled with soil cuttings upon completion. Ground elevation estimated with Google Earth.			
	10										
1595											

This Boring Log should be evaluated in conjunction with the complete geotechnical report. This Boring Log represents conditions observed at the specific location and date indicated, it is not warranted to be representative of subsurface conditions at other locations and times.

PLATE 9

TGR GEOTECHNICAL, INC.

LOG OF EXPLORATORY BORING B-9

Sheet **1** of **1**

Project Number:	**22-7455**	Logged By:	**RA**
Project Name:	**Colton Ave. and Wabash Ave., Redlands**	Project Engineer:	**SG**
Date Drilled:	**3/15/22 - 3/15/22**	Drill Type:	**Hollow Stem**
Ground Elev:	**1611**	Drive Wt & Drop:	**140lbs / 30in**

■ Shelby Tube
☒ Standard Split Spoon
◉ No recovery
⧗ Modified California
▼ Water Table ATD

Elevation (ft)	Depth (ft)	Graphic Log	FIELD RESULTS: Bulk Sample	FIELD RESULTS: Drive Sample	FIELD RESULTS: SPT blows/ft (or equivalent N)	FIELD RESULTS: Pocket Pen (tsf)	FIELD RESULTS: USCS	SUMMARY OF SUBSURFACE CONDITIONS	LAB RESULTS: Moisture Content (%)	LAB RESULTS: Dry Density, (pcf)	LAB RESULTS: Other Tests
		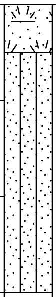						Surface is grass and vegetation.			
1610								NATIVE: Silty SAND- light brown, dry, stiff, very fine to fine grained sand, some fine to coarse grained gravel.			
								Total Depth: 3 feet due to refusal in cobbles. No groundwater encountered during drilling. No caving observed. Boring backfilled with soil cuttings upon completion. Ground elevation estimated with Google Earth.			
	5										
1605											
	10										
1600											

This Boring Log should be evaluated in conjunction with the complete geotechnical report. This Boring Log represents conditions observed at the specific location and date indicated, it is not warranted to be representative of subsurface conditions at other locations and times.

PLATE 10

TGR GEOTECHNICAL, INC.

LOG OF EXPLORATORY BORING P-2

Sheet **1** of **1**

Project Number: **22-7455**
Project Name: **Colton Ave. and Wabash Ave., Redlands**
Date Drilled: **3/15/22 - 3/15/22**
Ground Elev: **1606**

Logged By: **RA**
Project Engineer: **SG**
Drill Type: **Hollow Stem**
Drive Wt & Drop: **140lbs / 30in**

■ Shelby Tube ☒ Standard Split Spoon ◉ No recovery
⧗ Modified California ▼ Water Table ATD

Elevation (ft)	Depth (ft)	Graphic Log	FIELD RESULTS Bulk Sample	Drive Sample	SPT blows/ft (or equivalent N)	Pocket Pen (tsf)	USCS	SUMMARY OF SUBSURFACE CONDITIONS	LAB RESULTS Moisture Content (%)	Dry Density, (pcf)	Other Tests
								Surface is grass and vegetation.			
1605								NATIVE: Silty <u>SAND</u>- light brown, dry, stiff, very fine to fine grained sand, some fine to coarse grained gravel.			
1600	5			⧗	16		SP	<u>SAND</u>- light brown, dry, medium dense, fine grained sand, fine to coarse grained gravel, cobbles.	2	117	-200= 10.3%
1595	10							Total Depth: 9 feet due to refusal in cobbles. No groundwater encountered during drilling. No caving observed. Boring utilized for percolation testing. Boring backfilled with soil cuttings upon completion. Ground elevation estimated with Google Earth.			

PLATE 11

TGR GEOTECHNICAL, INC.

APPENDIX P

Initial Time of Concentration Nomographs, San Bernardino County Hydrology Manual Figure D-1

Pre-developed DA1

L = 1,000', H = 14.9'

K = Undeveloped Good Cover

$T_c = 34.5$

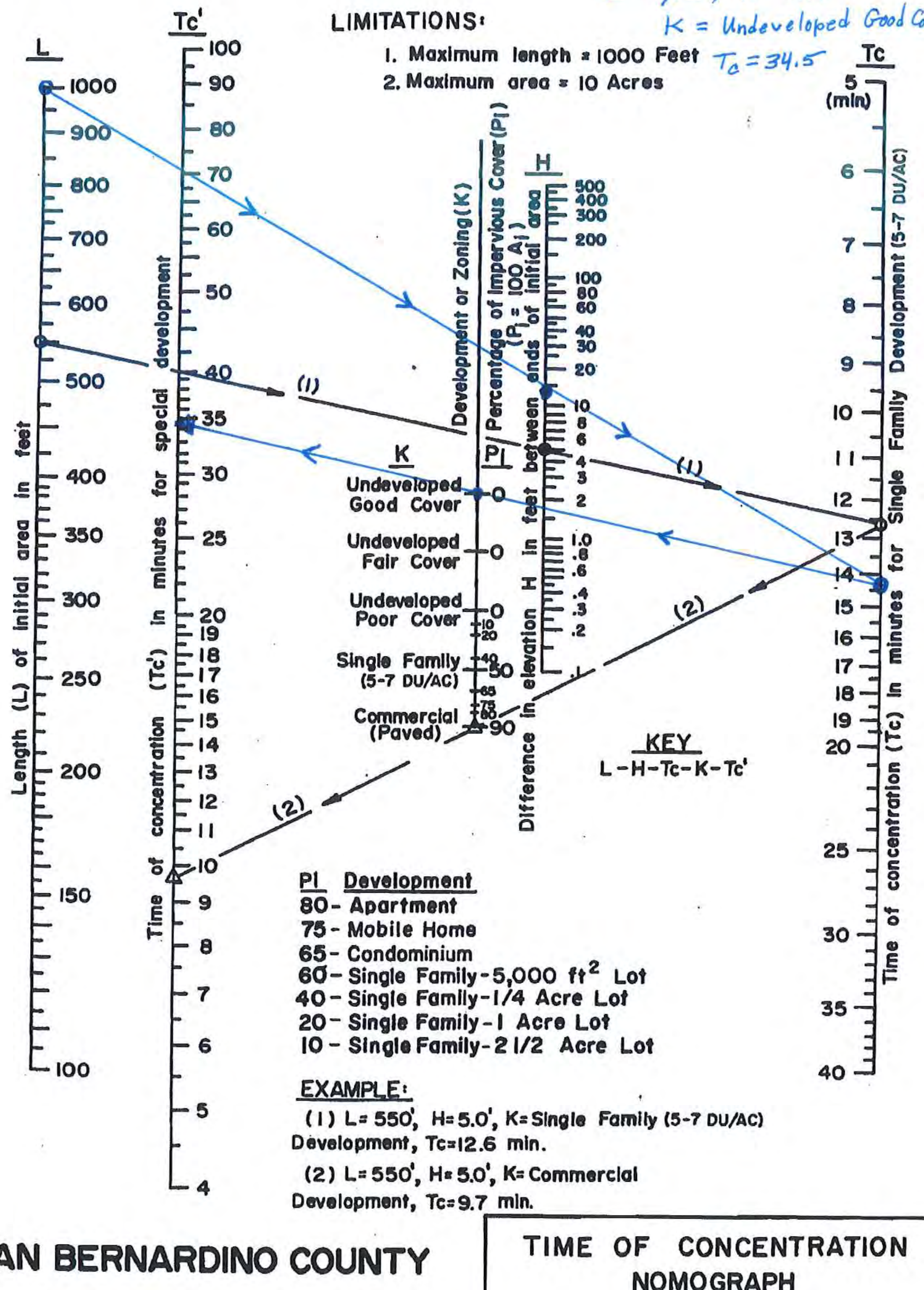

LIMITATIONS:

1. Maximum length = 1000 Feet
2. Maximum area = 10 Acres

KEY

L-H-Tc-K-Tc'

PI	Development
80	Apartment
75	Mobile Home
65	Condominium
60	Single Family-5,000 ft^2 Lot
40	Single Family-1/4 Acre Lot
20	Single Family-1 Acre Lot
10	Single Family-2 1/2 Acre Lot

EXAMPLE:

(1) L= 550', H=5.0', K=Single Family (5-7 DU/AC) Development, Tc=12.6 min.

(2) L= 550', H= 5.0', K= Commercial Development, Tc= 9.7 min.

SAN BERNARDINO COUNTY

HYDROLOGY MANUAL

TIME OF CONCENTRATION NOMOGRAPH FOR INITIAL SUBAREA

Figure D-1

Post-developed DA 1
L=679', H=3.4', K=80 (Single Family Homes - 80% Impervious Cover)
Tc = 12.5

LIMITATIONS:

1. Maximum length = 1000 Feet
2. Maximum area = 10 Acres

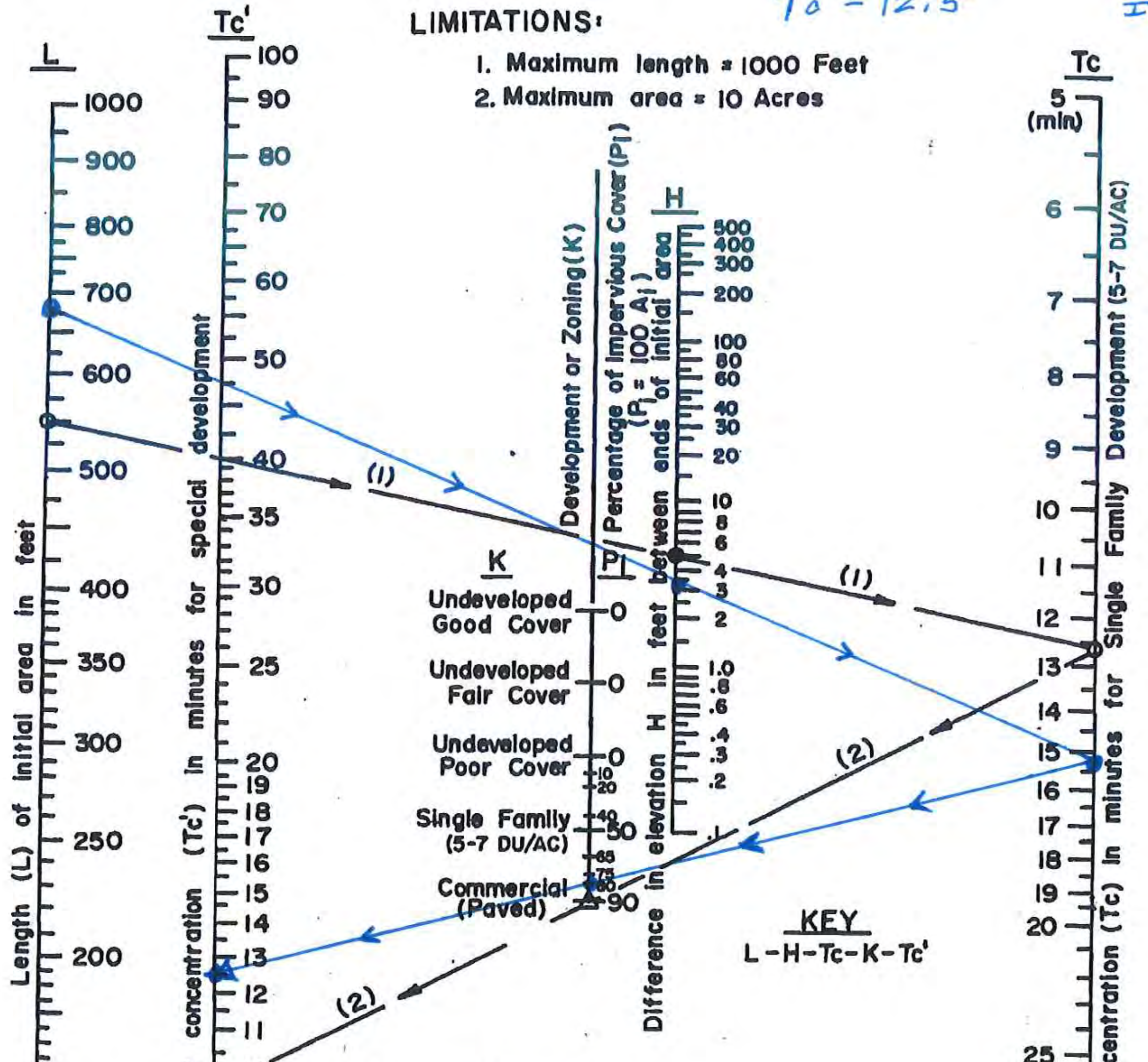

Pi Development

80 - Apartment
75 - Mobile Home
65 - Condominium
60 - Single Family - 5,000 ft² Lot
40 - Single Family - 1/4 Acre Lot
20 - Single Family - 1 Acre Lot
10 - Single Family - 2 1/2 Acre Lot

EXAMPLE:

(1) L = 550', H = 5.0', K = Single Family (5-7 DU/AC) Development, Tc = 12.6 min.

(2) L = 550', H = 5.0', K = Commercial Development, Tc = 9.7 min.

SAN BERNARDINO COUNTY
HYDROLOGY MANUAL

TIME OF CONCENTRATION NOMOGRAPH FOR INITIAL SUBAREA

Figure D-1

Pre-developed DA 2
L = 156', H = 3.90'
K = Undeveloped Good Cover
Tc = 14.8

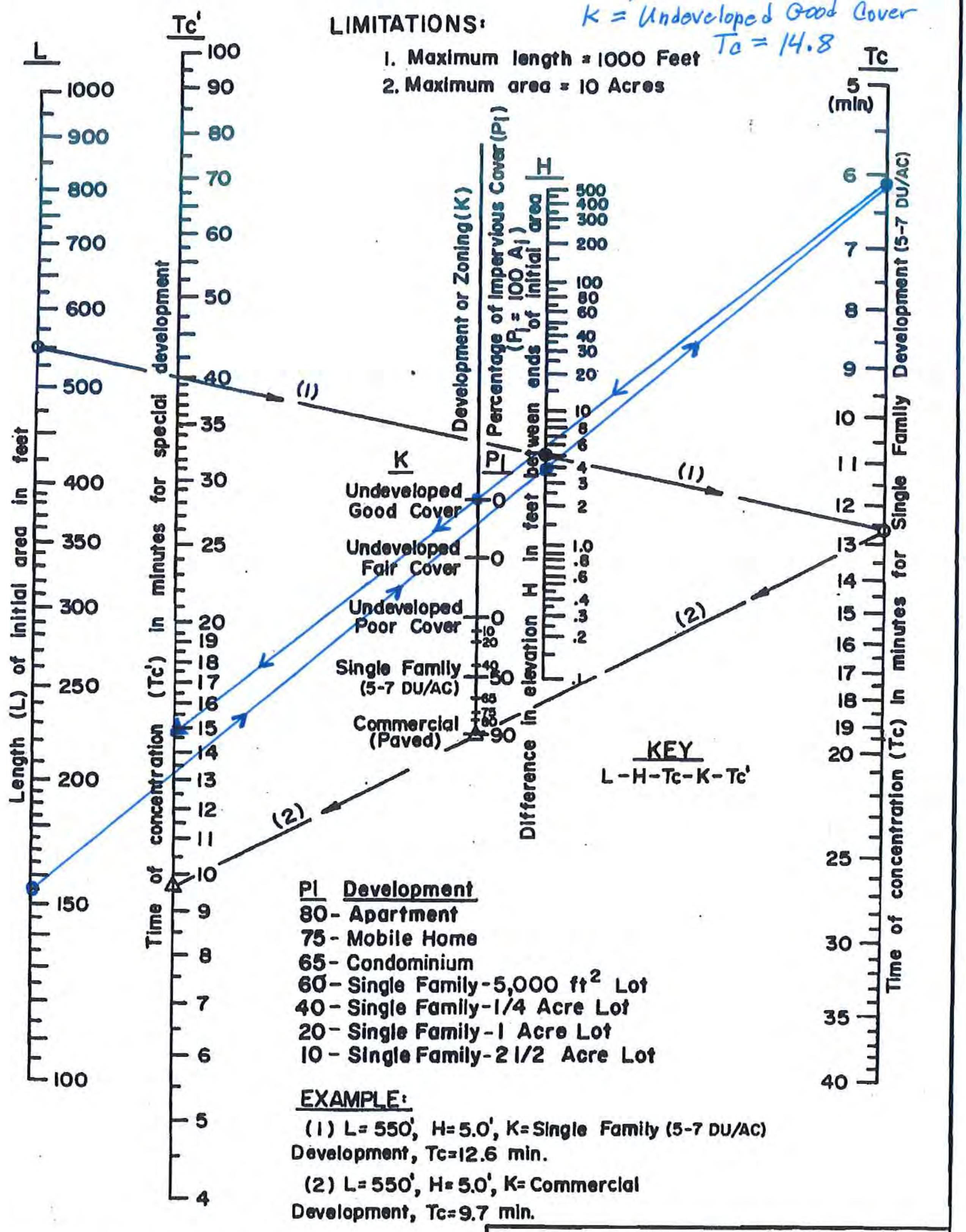

LIMITATIONS:

1. Maximum length = 1000 Feet
2. Maximum area = 10 Acres

KEY
L-H-Tc-K-Tc'

Pi	Development
80	Apartment
75	Mobile Home
65	Condominium
60	Single Family-5,000 ft^2 Lot
40	Single Family-1/4 Acre Lot
20	Single Family-1 Acre Lot
10	Single Family-2 1/2 Acre Lot

EXAMPLE:

(1) L= 550', H= 5.0', K= Single Family (5-7 DU/AC) Development, Tc=12.6 min.

(2) L= 550', H= 5.0', K= Commercial Development, Tc= 9.7 min.

SAN BERNARDINO COUNTY
HYDROLOGY MANUAL

TIME OF CONCENTRATION NOMOGRAPH FOR INITIAL SUBAREA

Figure D-1

Post-developed DA 2
L = 205', H = 1.03', K = 80 (Single Family Homes — 80% Impervious Cover)
Tc = 7.75

LIMITATIONS:

1. Maximum length = 1000 Feet
2. Maximum area = 10 Acres

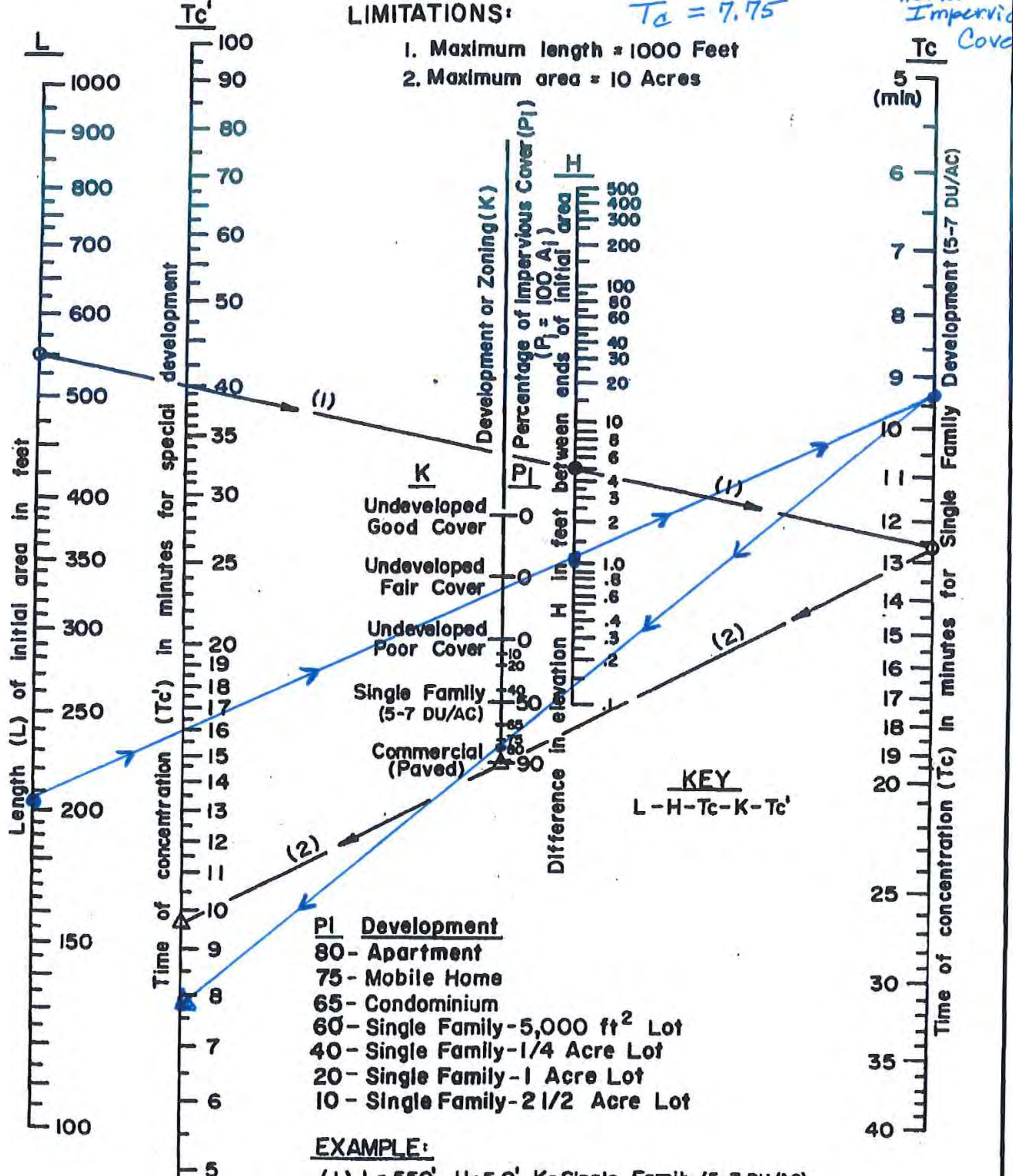

KEY
L-H-Tc-K-Tc'

PI Development

80 - Apartment
75 - Mobile Home
65 - Condominium
60 - Single Family - 5,000 ft² Lot
40 - Single Family - 1/4 Acre Lot
20 - Single Family - 1 Acre Lot
10 - Single Family - 2 1/2 Acre Lot

EXAMPLE:

(1) L = 550', H = 5.0', K = Single Family (5-7 DU/AC) Development, Tc = 12.6 min.

(2) L = 550', H = 5.0', K = Commercial Development, Tc = 9.7 min.

SAN BERNARDINO COUNTY
HYDROLOGY MANUAL

TIME OF CONCENTRATION NOMOGRAPH FOR INITIAL SUBAREA

Figure D-1